No. PF-42AA

TCM®

PARTS CATALOGUE

FORKLIFT TRUCK

DIESEL POWERED

FD20C18
FD20T18
FD25C18
FD25T18
FD20C7
FD20T7
FD20W7
FD25C7
FD25T7
FD25W7

TCM CORPORATION

ご使用のまえに

このパーツカタログは，TCM フォークリフト の構成部品を収録しています。

部品ご注文について

部品ご注文の際は，必ず車両の形式・仕様・製造番号（号車），部品番号および注文数を明示してください。車両の製造番号（号車）は車両銘板に表示しています。

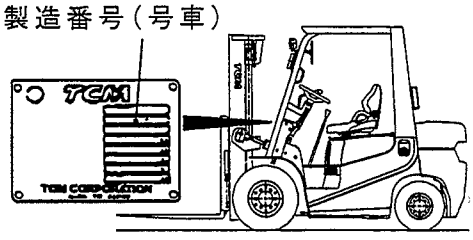

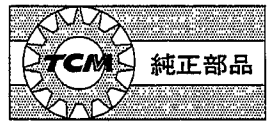

部品は，必ず「TCM 純正部品」をご使用ください。
純正部品以外の部品をご使用になり，故障が発生した場合は保証できません。

ご使用について

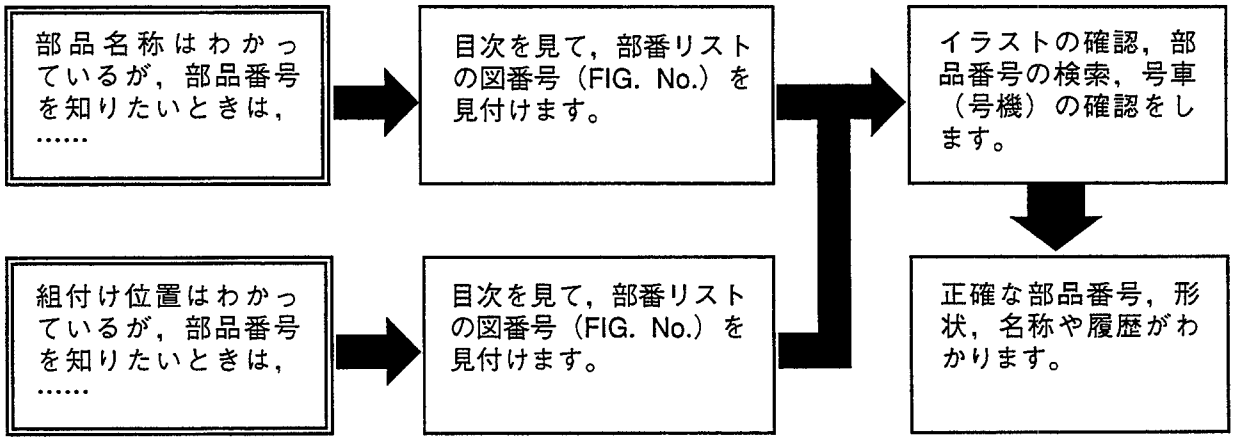

略語および記号

ＡＳＳＹ	組立品を示します。
ＲＨ	車両の前方向に向かって右側を示します。
ＬＨ	車両の前方向に向かって左側を示します。
ＡＲ	必要に応じた数を使用します。
＊	セットおよびキットの販売部品を示します。
Ｔ	厚みを示します。
＋	図示していません。
＃	単体販売しません。

部品は，品質向上のため予告なく変更することがありますので，あらかじめご了承ください。
詳細は，TCM 指定整備工場にご相談ください。

INTRODUCTION

This Parts Catalogue contains the component parts of the TCM FORKLIFT TRUCK.

How to order parts

When ordering, be sure to specify the model name, specification and serial number (machine number) of your machine, as well as the part number and desired quantity for each part. The machine serial number (machine number) is indicated on the machine name plate.

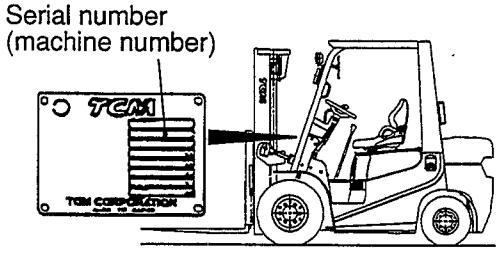

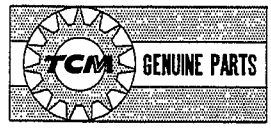

Always use "TCM's Genuine Parts". We cannot guarantee any loss or trouble attributable to other parts than ours.

How to use the Parts Catalogue

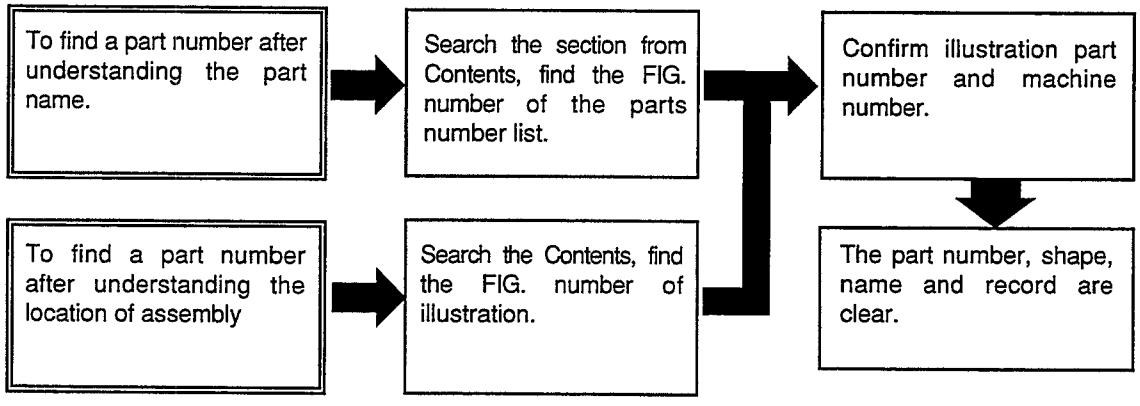

Abbreviations and symbols

ASSY ···	Assembled unit.
RH ·····	Right-hand when viewed forward on the truck.
LH ·····	Left-hand when viewed forward on the truck.
AR ·····	Quantity required.
* ·····	The marketable part set or kit.
T ·····	Thickness.
+ ·····	Not illustrated.
# ·····	Not sold separately.

Materals and specifications subject to change without notice.

CONTENTS 目次

CHASSIS シャーシ

a	FD20C18	c	FD25C18	e	FD20C7	g	FD20T7	i	FD20W7
b	FD20T18	d	FD25T18	f	FD25C7	h	FD25T7	j	FD25W7

SECTION 部門	a	b	c	d	e	f	g	h	i	j	FIG. NO.
ENGINE MOUNT エンジンマウント	○	○	○	○							1
ENGINE MOUNT エンジンマウント					○	○	○	○	○	○	2
AIR CLEANER エアークリーナ	○	○	○	○							3
AIR CLEANER エアークリーナ					○	○	○	○	○	○	4
AIR DUCT エアーダクト	○	○	○	○							5
AIR DUCT エアーダクト					○	○	○	○	○	○	6
PRE CLEANER [CAKB] プレクリーナ	○	○	○	○	○	○	○	○	○	○	7
COOLING UNIT (CLUTCH) クーリングユニット	○		○								8
COOLING UNIT (CLUTCH) クーリングユニット					○	○					9
COOLING UNIT (TOR-CON) クーリングユニット		○		○							10
COOLING UNIT (TOR-CON)(OIL CLUTCH) クーリングユニット							○	○	○	○	11
RADIATOR PARTS & RESERVE TANK ラジエータパーツ&リザーブタンク	○	○	○	○	○	○	○	○	○	○	12
FAN SHROUD ファンシュラウド	○	○	○	○							13
FAN SHROUD (CLUTCH)(TOR-CON) ファンシュラウド					○	○	○	○			14
FAN SHROUD (OIL CLUTCH) ファンシュラウド									○	○	15
FUEL SYSTEM (SUPPLY) フューエルシステム	○	○	○	○	○	○	○	○	○	○	16
FUEL SYSTEM (SUCTION) フューエルシステム	○	○	○	○	○	○	○	○	○	○	17
EXHAUST SYSTEM エキゾーストシステム	○	○	○	○							18
EXHAUST SYSTEM エキゾーストシステム					○	○	○	○	○	○	19
EXHAUST SYSTEM [DPF] エキゾーストシステム					○	○	○	○	○	○	20
POST & TAIL [TUE] ポスト&テイル	○	○	○	○							21

CONTENTS 目次

CHASSIS シャーシ

a	FD20C18	c	FD25C18	e	FD20C7	g	FD20T7	i	FD20W7
b	FD20T18	d	FD25T18	f	FD25C7	h	FD25T7	j	FD25W7

SECTION 部門	a	b	c	d	e	f	g	h	i	j	FIG. NO.
POST & TAIL [TUE] ポスト&テイル					○	○	○	○	○	○	22
POST & TAIL [TUE/(EXB,EXC,EXE,EXK,EXN)] ポスト&テイル					○	○	○	○			23
WIRE HARNESS [DPF] ワイヤハーネス					○	○	○	○	○	○	24
FRONT TUBE & JOINT [DPF] フロントチューブ&ジョイント					○	○	○	○	○	○	25
COMBINATION METER コンビネーションメータ	○	○	○	○	○	○	○	○	○	○	26
STEERING SHAFT COVER (CLUTCH)(OIL CLUTCH) ステアリングシャフトカバー	○		○		○	○			○	○	27
STEERING SHAFT COVER (TOR-CON) ステアリングシャフトカバー		○		○			○	○			28
ELECTRIC PARTS エレクトリックパーツ	○	○	○	○							29
ELECTRIC PARTS エレクトリックパーツ					○	○	○	○	○	○	30
BATTERY バッテリ	○	○	○	○	○	○	○	○	○	○	31
FRONT GUARD WIRE HARNESS (CLUTCH & OIL CLUTCH) フロントガードワイヤハーネス	○		○		○	○			○	○	32
FRONT GUARD WIRE HARNESS (TOR-CON) フロントガードワイヤハーネス		○		○			○	○			33
ENGINE WIRE HARNESS (CLUTCH) エンジンワイヤハーネス	○		○								34
ENGINE WIRE HARNESS (CLUTCH)(OIL CLUTCH) エンジンワイヤハーネス					○	○			○	○	35
ENGINE WIRE HARNESS (TOR-CON) エンジンワイヤハーネス		○		○							36
ENGINE WIRE HARNESS (TOR-CON) エンジンワイヤハーネス							○	○			37
BACK BUZZER バックブザー	○	○	○	○	○	○	○	○	○	○	38
LIGHT UNIT ライトユニット	○	○	○	○	○	○	○	○	○	○	39
LICENSE LIGHT ライセンスライト	○	○	○	○	○	○	○	○	○	○	40
LICENSE LIGHT [SCB001/RRE] ライセンスライト					○	○	○	○	○	○	41
LICENSE LIGHT [RRE/RW] ライセンスライト						○		○		○	42

CONTENTS 目次

CHASSIS シャーシ

a	FD20C18	c	FD25C18	e	FD20C7	g	FD20T7	i	FD20W7
b	FD20T18	d	FD25T18	f	FD25C7	h	FD25T7	j	FD25W7

SECTION 部門	a	b	c	d	e	f	g	h	i	j	FIG. NO.
LICENSE LIGHT [TUE/RRE] ライセンスライト	O	O	O	O	O	O	O	O	O	O	43
REAR WORKING LIGHT [RWLR] リヤーワーキングライト	O	O	O	O	O	O	O	O	O	O	44
REAR WORKING LIGHT [RWLL] リヤーワーキングライト	O	O	O	O	O	O	O	O	O	O	45
REAR WORKING LIGHT [RWL2] リヤーワーキングライト	O	O	O	O	O	O	O	O	O	O	46
REVOLVING LIGHT [RLY][RLR] リボルビングライト	O	O	O	O	O	O	O	O	O	O	47
SPOT LIGHT [SPL] スポットライト	O	O	O	O	O	O	O	O	O	O	48
HEATER UNIT [HR] ヒータユニット	O	O	O	O	O	O	O	O	O	O	49
HEATER VALVE & ELBOW [HR] ヒータバルブ&エルボ	O	O	O	O							50
HEATER VALVE & ELBOW [HR] ヒータバルブ&エルボ					O	O	O	O	O	O	51
FAN [FAN] ファン	O	O	O	O	O	O	O	O	O	O	52
AMMETER [AM] アンメータ	O	O	O	O	O	O	O	O	O	O	53
SPEED METER [SM] スピードメータ	O	O	O	O	O	O	O	O	O	O	54
TORQUE CONVERTER THERMOMETER [TTM] トルクコンバータサーモメータ		O		O			O	O			55
TORQUE CONVERTER PRESSURE METER [TPM] トルクコンバータプレッシャメータ		O		O			O	O			56
SPEED DETECTOR UNIT [SAS] スピードディテクタユニット	O	O	O	O	O	O	O	O	O	O	57
SPEED ALARM SYSTEM [SASB] スピードアラームシステム	O	O	O	O	O	O	O	O	O	O	58
SPEED ALARM SYSTEM [SASR] スピードアラームシステム	O	O	O	O	O	O	O	O	O	O	59
SPEED ALARM SYSTEM [SASC] スピードアラームシステム	O	O	O	O	O	O	O	O	O	O	60
OK MONITOR [OKM] OKモニタ	O	O	O	O	O	O	O	O	O	O	61
DRIVE UNIT MOUNT (CLUTCH) ドライブユニットマウント	O		O		O	O					62
CLUTCH (CLUTCH) クラッチ	O		O		O	O					63

CONTENTS 目次

CHASSIS シャーシ

a	FD20C18	c	FD25C18	e	FD20C7	g	FD20T7	i	FD20W7
b	FD20T18	d	FD25T18	f	FD25C7	h	FD25T7	j	FD25W7

SECTION 部門	a	b	c	d	e	f	g	h	i	j	FIG. NO.
MISSION CASE (CLUTCH)(OIL CLUTCH) ミッションケース	O		O		O	O			O	O	64
MISSION GEAR (CLUTCH)(OIL CLUTCH) ミッションギヤー	O		O		O	O			O	O	65
DRIVE UNIT MOUNT (TOR-CON) ドライブユニットマウント		O		O			O	O			66
TORQUE CONVERTER CASE (TOR-CON) トルクコンバータケース		O		O			O	O			67
CHARGING PUMP (TOR-CON) チャージングポンプ		O		O			O	O			68
MISSION CASE (TOR-CON) ミッションケース		O		O			O	O			69
CLUTCH PACK (TOR-CON) クラッチパック		O		O			O	O			70
CONTROL VALVE (TOR-CON) コントロールバルブ		O		O			O	O			71
REDUCTION リダクション	O	O	O	O	O	O	O	O	O	O	72
DIFFERENTIAL ディファレンシャル	O	O	O	O	O	O	O	O	O	O	73
DRIVE UNIT MOUNT (OIL CLUTCH) ドライブユニットマウント									O	O	74
CLUTCH (OIL CLUTCH) クラッチ									O	O	75
DRIVE AXLE ドライブアクスル	O	O	O	O	O	O	O	O	O	O	76
WHEEL BRAKE ホイールブレーキ	O	O	O	O	O	O	O	O	O	O	77
STEERING WHEEL UNIT ステアリングホイールユニット	O	O	O	O	O	O	O	O	O	O	78
GEAR BOX ギヤーボックス	O	O	O	O	O	O	O	O	O	O	79
ORBITROL [EXC][EXE][EXK][EXN][OBT] オービットロール					O	O	O	O			80
GEAR BOX [(EXC,EXE,EXK,EXN)/PSS] ギヤーボックス					O	O	O	O			81
STEERING WHEEL UNIT (TOR-CON):[EXN] ステアリングホイールユニット							O	O			82
DRAG LINK ドラッグリンク	O	O	O	O	O	O	O	O	O	O	83
STEERING AXLE ステアリングアクスル	O	O	O	O	O	O	O	O	O	O	84

CONTENTS 目次

CHASSIS シャーシ

a	FD20C18	c	FD25C18	e	FD20C7	g	FD20T7	i	FD20W7
b	FD20T18	d	FD25T18	f	FD25C7	h	FD25T7	j	FD25W7

SECTION 部門	a	b	c	d	e	f	g	h	i	j	FIG. NO.
STEERING AXLE [EXC][EXE][EXK][EXN][OBT] ステアリングアクスル					O	O	O	O			85
STEERING AXLE [(EXC,EXE,EXK,EXN)/PSS] ステアリングアクスル					O	O	O	O			86
AXLE SUPPORT アクスルサポート	O	O	O	O	O	O	O	O	O	O	87
HUB NUT ハブナット	O	O	O	O	O	O	O	O	O	O	88
FENDER [DD][SDD][TUJSF] フェンダ	O	O	O	O	O	O	O	O	O	O	89
FRONT WHEEL フロントホイール	O	O	O	O	O	O	O	O	O	O	90
FRONT WHEEL [DR F] フロントホイール	O	O	O	O	O	O	O	O	O	O	91
FRONT WHEEL [TJ F][TJSF][T F][TS F] フロントホイール	O	O	O	O	O	O	O	O	O	O	92
FRONT WHEEL [(TJ F,TJSF,T F,TS F)/DR F] フロントホイール	O	O	O	O	O	O	O	O	O	O	93
FRONT WHEEL [TUJF][TUSF][TUWF][TUGF] フロントホイール	O	O	O	O	O	O	O	O	O	O	94
FRONT WHEEL [TUJF/DR F] フロントホイール	O	O	O	O	O	O	O	O	O	O	95
FRONT WHEEL [TRAF] フロントホイール	O	O	O	O	O	O	O	O	O	O	96
FRONT WHEEL [TUJSF] フロントホイール	O	O	O	O	O	O	O	O	O	O	97
FRONT WHEEL [TJ W][TJSW][T W][TS W] フロントホイール	O	O	O	O	O	O	O	O	O	O	98
FRONT WHEEL [TUJW][TUSW][TUWW][TUGW] フロントホイール	O	O	O	O	O	O	O	O	O	O	99
FRONT WHEEL [TJ W70][TJSW70][T W70][TS W70] フロントホイール	O	O	O	O	O	O	O	O	O	O	100
FRONT WHEEL [TUJW70][TUSW70][TUWW70][TUGW70] フロントホイール	O	O	O	O	O	O	O	O	O	O	101
REAR WHEEL リヤーホイール	O	O	O	O	O	O	O	O	O	O	102
REAR WHEEL [DR R] リヤーホイール	O	O	O	O	O	O	O	O	O	O	103
REAR WHEEL [TJ R][TJSR][T R][TS R] リヤーホイール	O	O	O	O	O	O	O	O	O	O	104
REAR WHEEL [(TJ R,TJSR,T R,TS R)/DR R] リヤーホイール	O	O	O	O	O	O	O	O	O	O	105

CONTENTS 目次

CHASSIS シャーシ

a	FD20C18	c	FD25C18	e	FD20C7	g	FD20T7	i	FD20W7
b	FD20T18	d	FD25T18	f	FD25C7	h	FD25T7	j	FD25W7

SECTION 部門	a	b	c	d	e	f	g	h	i	j	FIG. NO.
REAR WHEEL [TUJR][TUSR][TUWR][TUGR] リヤーホイール	○	○	○	○	○	○	○	○	○	○	106
REAR WHEEL [TUJR/DR R] リヤーホイール	○	○	○	○	○	○	○	○	○	○	107
REAR WHEEL [TRAR] リヤーホイール	○	○	○	○	○	○	○	○	○	○	108
POWER CYLINDER パワーシリンダ	○	○	○	○	○	○	○	○	○	○	109
POWER CYLINDER [EXC][EXE][EXK][EXN][OBT] パワーシリンダ					○	○	○	○			110
POWER CYLINDER [(EXC,EXE,EXK,EXN)/PSS] パワーシリンダ					○	○	○	○			111
POWER CYLINDER BOOT [PSB][FC][RINFC] パワーシリンダブーツ	○	○	○	○	○	○	○	○	○	○	112
OVERHEAD GUARD オーバヘッドガード	○	○	○	○	○	○	○	○	○	○	113
OVERHEAD GUARD [EXB][EXC][EXE][EXK][EXN] オーバヘッドガード					○	○	○	○			114
FRONT PIPE フロントパイプ					○	○	○	○	○	○	115
FRONT PIPE フロントパイプ	○	○	○	○							116
REAR PIPE リヤーパイプ	○	○	○	○	○	○	○	○	○	○	117
REAR PIPE [EXB][EXC][EXE][EXK][EXN] リヤーパイプ					○	○	○	○			118
REAR PIPE [RW] リヤーパイプ						○		○		○	119
FRONT LAMP BRACKET フロントランプブラケット	○	○	○	○	○	○	○	○	○	○	120
FRONT LAMP BRACKET [HL][BKH] フロントランプブラケット	○	○	○	○	○	○	○	○	○	○	121
REAR LAMP BRACKET リヤーランプブラケット	○	○	○	○	○	○	○	○	○	○	122
HEAD GUARD PARTS ヘッドガードパーツ	○	○	○	○	○	○	○	○	○	○	123
ACCEL PEDAL アクセルペダル					○	○	○	○	○	○	124
ACCEL PEDAL アクセルペダル	○	○	○	○							125
FOOT PEDAL (CLUTCH) フットペダル	○		○		○	○					126

CONTENTS 目次

CHASSIS シャーシ

a	FD20C18	c	FD25C18	e	FD20C7	g	FD20T7	i	FD20W7
b	FD20T18	d	FD25T18	f	FD25C7	h	FD25T7	j	FD25W7

SECTION 部門	a	b	c	d	e	f	g	h	i	j	FIG. NO.
FOOT PEDAL (CLUTCH):[PC] ﾌｯﾄﾍﾟﾀﾞﾙ	○		○		○	○					127
FOOT PEDAL (TOR-CON) ﾌｯﾄﾍﾟﾀﾞﾙ		○		○			○	○			128
FOOT PEDAL (OIL CLUTCH) ﾌｯﾄﾍﾟﾀﾞﾙ									○	○	129
FOOT PEDAL CYLINDER (CLUTCH) ﾌｯﾄﾍﾟﾀﾞﾙｼﾘﾝﾀﾞ	○		○		○	○					130
FOOT PEDAL CYLINDER (CLUTCH):[PC] ﾌｯﾄﾍﾟﾀﾞﾙｼﾘﾝﾀﾞ	○		○		○	○					131
FOOT PEDAL CYLINDER (TOR-CON) ﾌｯﾄﾍﾟﾀﾞﾙｼﾘﾝﾀﾞ		○		○			○	○			132
FOOT PEDAL CYLINDER (OIL CLUTCH) ﾌｯﾄﾍﾟﾀﾞﾙｼﾘﾝﾀﾞ									○	○	133
BRAKE PIPE (CLUTCH) ﾌﾞﾚｰｷﾊﾟｲﾌﾟ	○		○		○	○					134
BRAKE PIPE (CLUTCH):[PC] ﾌﾞﾚｰｷﾊﾟｲﾌﾟ	○		○		○	○					135
BRAKE PIPE (TOR-CON) ﾌﾞﾚｰｷﾊﾟｲﾌﾟ		○		○			○	○			136
BRAKE PIPE (OIL CLUTCH) ﾌﾞﾚｰｷﾊﾟｲﾌﾟ									○	○	137
FOOT PEDAL COVER ﾌｯﾄﾍﾟﾀﾞﾙｶﾊﾞｰ	○	○	○	○	○	○	○	○	○	○	138
BRAKE MASTER CYLINDER ﾌﾞﾚｰｷﾏｽﾀｼﾘﾝﾀﾞ	○	○	○	○	○	○	○	○	○	○	139
BRAKE LEVER ﾌﾞﾚｰｷﾚﾊﾞｰ	○	○	○	○	○	○	○	○	○	○	140
FRAME ﾌﾚｰﾑ	○	○	○	○	○	○	○	○	○	○	141
OIL TANK (CLUTCH)(TOR-CON) ｵｲﾙﾀﾝｸ	○	○	○	○	○	○	○	○			142
OIL TANK (OIL CLUTCH) ｵｲﾙﾀﾝｸ									○	○	143
OIL CAP & LEVEL ｵｲﾙｷｬｯﾌﾟ&ﾚﾍﾞﾙ	○	○	○	○	○	○	○	○	○	○	144
FUEL TANK ﾌｭｰｴﾙﾀﾝｸ	○	○	○	○	○	○	○	○	○	○	145
BALANCE WEIGHT ﾊﾞﾗﾝｽｳｴｲﾄ	○	○	○	○	○	○	○	○	○	○	146
BALANCE WEIGHT [RW] ﾊﾞﾗﾝｽｳｴｲﾄ						○		○		○	147

CONTENTS 目次

CHASSIS シャーシ

a	FD20C18	c	FD25C18	e	FD20C7	g	FD20T7	i	FD20W7
b	FD20T18	d	FD25T18	f	FD25C7	h	FD25T7	j	FD25W7

SECTION 部門	a	b	c	d	e	f	g	h	i	j	FIG.NO.
BALANCE WEIGHT [HC] ﾊﾞﾗﾝｽｳｴｲﾄ	○	○	○	○	○	○	○	○	○	○	148
FRONT GUARD ﾌﾛﾝﾄｶﾞｰﾄﾞ	○	○	○	○	○	○	○	○	○	○	149
BONNET ﾎﾞﾝﾈｯﾄ	○	○	○	○	○	○	○	○	○	○	150
RADIATOR COVER ﾗｼﾞｴｰﾀｶﾊﾞｰ	○	○	○	○	○	○	○	○	○	○	151
RADIATOR COVER [RW] ﾗｼﾞｴｰﾀｶﾊﾞｰ						○		○		○	152
RADIATOR COVER [SCB001][SCBCR] ﾗｼﾞｴｰﾀｶﾊﾞｰ					○	○	○	○	○	○	153
BONNET HINGE ﾎﾞﾝﾈｯﾄﾋﾝｼﾞ	○	○	○	○	○	○	○	○	○	○	154
FLOOR BOARD ﾌﾛｱﾎﾞｰﾄﾞ	○	○	○	○	○	○	○	○	○	○	155
TRAY ﾄﾚｰ	○	○	○	○	○	○	○	○	○	○	156
TRAY [AW061][AW071][RWL][BB SW][BBASW] ﾄﾚｰ	○	○	○	○	○	○	○	○	○	○	157
TRAY [SM][AM][TPM] ﾄﾚｰ	○	○	○	○	○	○	○	○	○	○	158
TRAY [SM/(BB SW,BBASW)][SM/(BB SW,BBASW)/RWL] ﾄﾚｰ	○	○	○	○	○	○	○	○	○	○	159
TRAY [SM/(AW061,AW071)/RWL] ﾄﾚｰ	○	○	○	○	○	○	○	○	○	○	160
FRONT GUARD BOOT [FC] ﾌﾛﾝﾄｶﾞｰﾄﾞﾌﾞｰﾂ	○	○	○	○	○	○	○	○	○	○	161
SEAT ｼｰﾄ					○	○	○	○	○	○	162
SEAT ｼｰﾄ	○	○	○	○							163
SEAT [HGL] ｼｰﾄ					○	○	○	○	○	○	164
SEAT [RW] ｼｰﾄ						○		○		○	165
SEAT [SETDX1] ｼｰﾄ	○	○	○	○	○	○	○	○	○	○	166
PUMP UNIT (CLUTCH)(TOR-CON) ﾎﾟﾝﾌﾟﾕﾆｯﾄ					○	○	○	○			167
PUMP UNIT (CLUTCH)(TOR-CON) ﾎﾟﾝﾌﾟﾕﾆｯﾄ	○	○	○	○							168

CONTENTS 目次

CHASSIS シャーシ

a	FD20C18	c	FD25C18	e	FD20C7	g	FD20T7	i	FD20W7
b	FD20T18	d	FD25T18	f	FD25C7	h	FD25T7	j	FD25W7

SECTION 部門	a	b	c	d	e	f	g	h	i	j	FIG. NO.
PUMP UNIT (OIL CLUTCH) ﾎﾟﾝﾌﾟﾕﾆｯﾄ									O	O	169
CONTROL VALVE [2SV] ｺﾝﾄﾛｰﾙﾊﾞﾙﾌﾞ	O	O	O	O	O	O	O	O	O	O	170
CONTROL VALVE [3SV] ｺﾝﾄﾛｰﾙﾊﾞﾙﾌﾞ	O	O	O	O	O	O	O	O	O	O	171
CONTROL VALVE [4SV] ｺﾝﾄﾛｰﾙﾊﾞﾙﾌﾞ	O	O	O	O	O	O	O	O	O	O	172
CONTROL VALVE [5SV] ｺﾝﾄﾛｰﾙﾊﾞﾙﾌﾞ	O	O	O	O	O	O	O	O	O	O	173
INLET SECTION ｲﾝﾚｯﾄｾｸｼｮﾝ	O	O	O	O	O	O	O	O	O	O	174
SPOOL SECTION (LIFT) ｽﾌﾟｰﾙｾｸｼｮﾝ	O	O	O	O	O	O	O	O	O	O	175
SPOOL SECTION (TILT) ｽﾌﾟｰﾙｾｸｼｮﾝ	O	O	O	O	O	O	O	O	O	O	176
SPOOL SECTION [3SV][4SV][5SV] ｽﾌﾟｰﾙｾｸｼｮﾝ	O	O	O	O	O	O	O	O	O	O	177
CONTROL VALVE FITTING ｺﾝﾄﾛｰﾙﾊﾞﾙﾌﾞﾌｨｯﾃｨﾝｸﾞ	O	O	O	O	O	O	O	O	O	O	178
VALVE CONTROL [2SV] ﾊﾞﾙﾌﾞｺﾝﾄﾛｰﾙ	O	O	O	O	O	O	O	O	O	O	179
VALVE CONTROL [3SV] ﾊﾞﾙﾌﾞｺﾝﾄﾛｰﾙ	O	O	O	O	O	O	O	O	O	O	180
VALVE CONTROL [4SV] ﾊﾞﾙﾌﾞｺﾝﾄﾛｰﾙ	O	O	O	O	O	O	O	O	O	O	181
VALVE CONTROL [5SV] ﾊﾞﾙﾌﾞｺﾝﾄﾛｰﾙ	O	O	O	O	O	O	O	O	O	O	182
VALVE CONTROL KNOB ﾊﾞﾙﾌﾞｺﾝﾄﾛｰﾙﾉﾌﾞ	O	O	O	O	O	O	O	O	O	O	183
HYDRAULIC LINE (MAIN) (1/3) (CLUTCH) (TOR-CON) ﾊｲﾄﾞﾛﾘｯｸﾗｲﾝ(ﾒｲﾝ)(1/3)					O	O	O	O			184
HYDRAULIC LINE (MAIN) (1/3) ﾊｲﾄﾞﾛﾘｯｸﾗｲﾝ(ﾒｲﾝ)(1/3)	O	O	O	O							185
HYDRAULIC LINE (MAIN) (1/3) (OIL CLUTCH) ﾊｲﾄﾞﾛﾘｯｸﾗｲﾝ(ﾒｲﾝ)(1/3)									O	O	186
HYDRAULIC LINE (MAIN) (2/3) ﾊｲﾄﾞﾛﾘｯｸﾗｲﾝ(ﾒｲﾝ)(2/3)	O	O	O	O	O	O	O	O	O	O	187
HYDRAULIC LINE (MAIN) (2/3) [EXC] [EXE] [EXK] [EXN] [OBT] ﾊｲﾄﾞﾛﾘｯｸﾗｲﾝ(ﾒｲﾝ)(2/3)					O	O	O	O			188
HYDRAULIC LINE (MAIN) (2/3) [(EXC, EXE, EXK, EXN)/PSS] ﾊｲﾄﾞﾛﾘｯｸﾗｲﾝ(ﾒｲﾝ)(2/3)					O	O	O	O			189

CONTENTS 目次

CHASSIS シャーシ

a	FD20C18	c	FD25C18	e	FD20C7	g	FD20T7	i	FD20W7
b	FD20T18	d	FD25T18	f	FD25C7	h	FD25T7	j	FD25W7

SECTION 部門	a	b	c	d	e	f	g	h	i	j	FIG. NO.
HYDRAULIC LINE (MAIN)(3/3) ﾊｲﾄﾞﾛﾘｯｸﾗｲﾝ(ﾒｲﾝ)(3/3)	○	○	○	○	○	○	○	○	○	○	190
HYDRAULIC LINE (TOR-CON) ﾊｲﾄﾞﾛﾘｯｸﾗｲﾝ(ﾄﾙｺﾝ)		○		○							191
HYDRAULIC LINE (TOR-CON) ﾊｲﾄﾞﾛﾘｯｸﾗｲﾝ(ﾄﾙｺﾝ)							○	○			192
HYDRAULIC LINE (OIL CLUTCH) ﾊｲﾄﾞﾛﾘｯｸﾗｲﾝ(ｵｲﾙｸﾗｯﾁ)									○	○	193
TILT CYLINDER ﾃｨﾙﾄｼﾘﾝﾀﾞ	○	○	○	○	○	○	○	○	○	○	194
TILT BOOT [TLB][FC] ﾃｨﾙﾄﾌﾞｰﾂ	○	○	○	○	○	○	○	○	○	○	195
DECAL (1/2) ﾃﾞｶﾙ(1/2)	○	○	○	○	○	○	○	○	○	○	196
DECAL (2/2) ﾃﾞｶﾙ(2/2)	○	○	○	○	○	○	○	○	○	○	197
DECAL (2/2)[EXB] ﾃﾞｶﾙ(2/2)					○	○	○	○			198
DECAL (2/2)[EXC] ﾃﾞｶﾙ(2/2)					○	○	○	○			199
DECAL (2/2)[EXE] ﾃﾞｶﾙ(2/2)					○	○	○	○			200
DECAL (2/2)[EXK] ﾃﾞｶﾙ(2/2)					○	○	○	○			201
DECAL (2/2)[EXN] ﾃﾞｶﾙ(2/2)					○	○	○	○			202
SERVICE TOOL [TO][EX] ｻｰﾋﾞｽﾂｰﾙ	○	○	○	○	○	○	○	○	○	○	203
FIRE EXTINGUISHER [FE][FE M] ﾌｧｲﾔｲｸｽﾃｨﾝｸﾞｲｯｼｬ	○	○	○	○	○	○	○	○	○	○	204

CONTENTS 目次

MAST マスト

a	FD20C18	c	FD25C18	e	FD20C7	g	FD20T7	i	FD20W7
b	FD20T18	d	FD25T18	f	FD25C7	h	FD25T7	j	FD25W7

SECTION 部門	a	b	c	d	e	f	g	h	i	j	FIG.NO.
[VM39A]											
FORK [VM39A] フォーク	○	○	○	○	○	○	○	○	○	○	205
LIFT BRACKET [VM39A] リフトブラケット	○	○	○	○	○	○	○	○	○	○	206
BACKREST [VM39A] バックレスト	○	○	○	○	○	○	○	○	○	○	207
MAST [VM39A] マスト	○	○	○	○	○	○	○	○	○	○	208
LIFT CYLINDER [VM39A] リフトシリンダ	○	○	○	○	○	○	○	○	○	○	209
MAST PIPING [VM39A] マストパイピング	○	○	○	○	○	○	○	○	○	○	210
[VFM39A]											
FORK [VFM39A] フォーク	○	○	○	○	○	○	○	○	○	○	211
LIFT BRACKET [VFM39A] リフトブラケット	○	○	○	○	○	○	○	○	○	○	212
BACKREST [VFM39A] バックレスト	○	○	○	○	○	○	○	○	○	○	213
MAST [VFM39A] マスト	○	○	○	○	○	○	○	○	○	○	214
TILT GAUGE [VFM39A/(TG,PPC,PR,PRC,MPC)] ティルトゲージ	○	○	○	○	○	○	○	○	○	○	215
LIFT CYLINDER (FRONT) [VFM39A] リフトシリンダ(フロント)	○	○	○	○	○	○	○	○	○	○	216
LIFT CYLINDER (REAR) [VFM39A] リフトシリンダ(リヤー)	○	○	○	○	○	○	○	○	○	○	217
MAST PIPING [VFM39A] マストパイピング	○	○	○	○	○	○	○	○	○	○	218

CONTENTS 目次

MAST マスト

a	FD20C18	c	FD25C18	e	FD20C7	g	FD20T7	i	FD20W7
b	FD20T18	d	FD25T18	f	FD25C7	h	FD25T7	j	FD25W7

SECTION 部門	a	b	c	d	e	f	g	h	i	j	FIG.NO.
[VFHM39A]											
FORK[VFHM39A] フォーク	○	○	○	○	○	○	○	○	○	○	219
LIFT BRACKET[VFHM39A] リフトブラケット	○	○	○	○	○	○	○	○	○	○	220
BACKREST[VFHM91A] バックレスト	○	○	○	○	○	○	○	○	○	○	221
MAST[VFHM39A] マスト	○	○	○	○	○	○	○	○	○	○	222
TILT GAUGE[VFHM39A/(TG,PPC,PR,PRC,MPC)] ティルトゲージ	○	○	○	○	○	○	○	○	○	○	223
LIFT CYLINDER(FRONT)[VFHM39A] リフトシリンダ(フロント)	○	○	○	○	○	○	○	○	○	○	224
LIFT CYLINDER(REAR)[VFHM39A] リフトシリンダ(リヤー)	○	○	○	○	○	○	○	○	○	○	225
MAST PIPING[VFHM39A] マストパイピング	○	○	○	○	○	○	○	○	○	○	226

FIG.1 ENGINE MOUNT
(F6021010) エンジンマウント

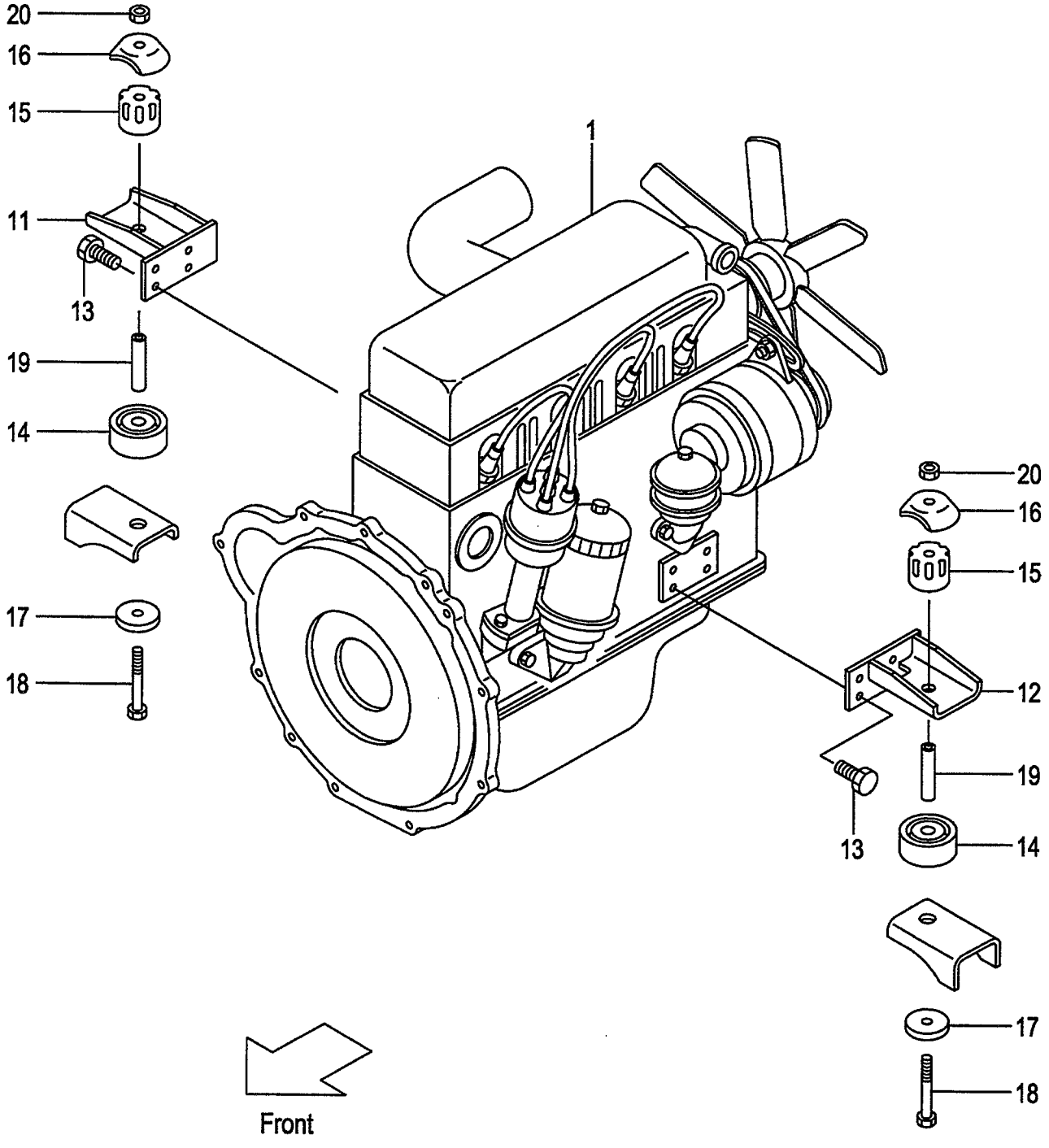

FIG.1
(F6021010)

A:FD20C18 FD20T18 FD25C18 FD25T18

Item No	Part No.	Mark	Description		Req'd	Remarks : Serial No.
1	242E1-00101		ENGINE,S4L-T	ｴﾝｼﾞﾝ	1	
2	01400-00008	+	NUT	ﾅｯﾄ	1	
3	02010-00008	+	WASHER	ﾜｯｼｬ	1	
4	02000-00008	+	WASHER	ﾜｯｼｬ	1	
5	01400-00006	+	NUT	ﾅｯﾄ	1	
6	02010-00006	+	WASHER	ﾜｯｼｬ	1	
7	02000-00006	+	WASHER	ﾜｯｼｬ	1	
8	01100-05010	+	BOLT	ﾎﾞﾙﾄ	1	
9	02010-00005	+	WASHER	ﾜｯｼｬ	1	
10	01185-06012	+	BOLT	ﾎﾞﾙﾄ	1	
11	241G1-02101		BRACKET,RH	ﾌﾞﾗｹｯﾄ	1	
12	241G1-02201		BRACKET,LH	ﾌﾞﾗｹｯﾄ	1	
13	01219-12030		BOLT	ﾎﾞﾙﾄ	8	
14	216G1-02111		RUBBER,UNDER	ﾗﾊﾞｰ	2	
15	214A1-02111		RUBBER,UPPER	ﾗﾊﾞｰ	2	
16	214A1-02121		CAP	ｷｬｯﾌﾟ	2	
17	23651-02001		PLATE	ﾌﾟﾚｰﾄ	2	
18	01103-10097		BOLT	ﾎﾞﾙﾄ	2	
19	234A1-02071		COLLAR	ｶﾗｰ	2	
20	23651-02011		NUT	ﾅｯﾄ	2	

FIG.2 ENGINE MOUNT
(F6021020) エンジンマウント

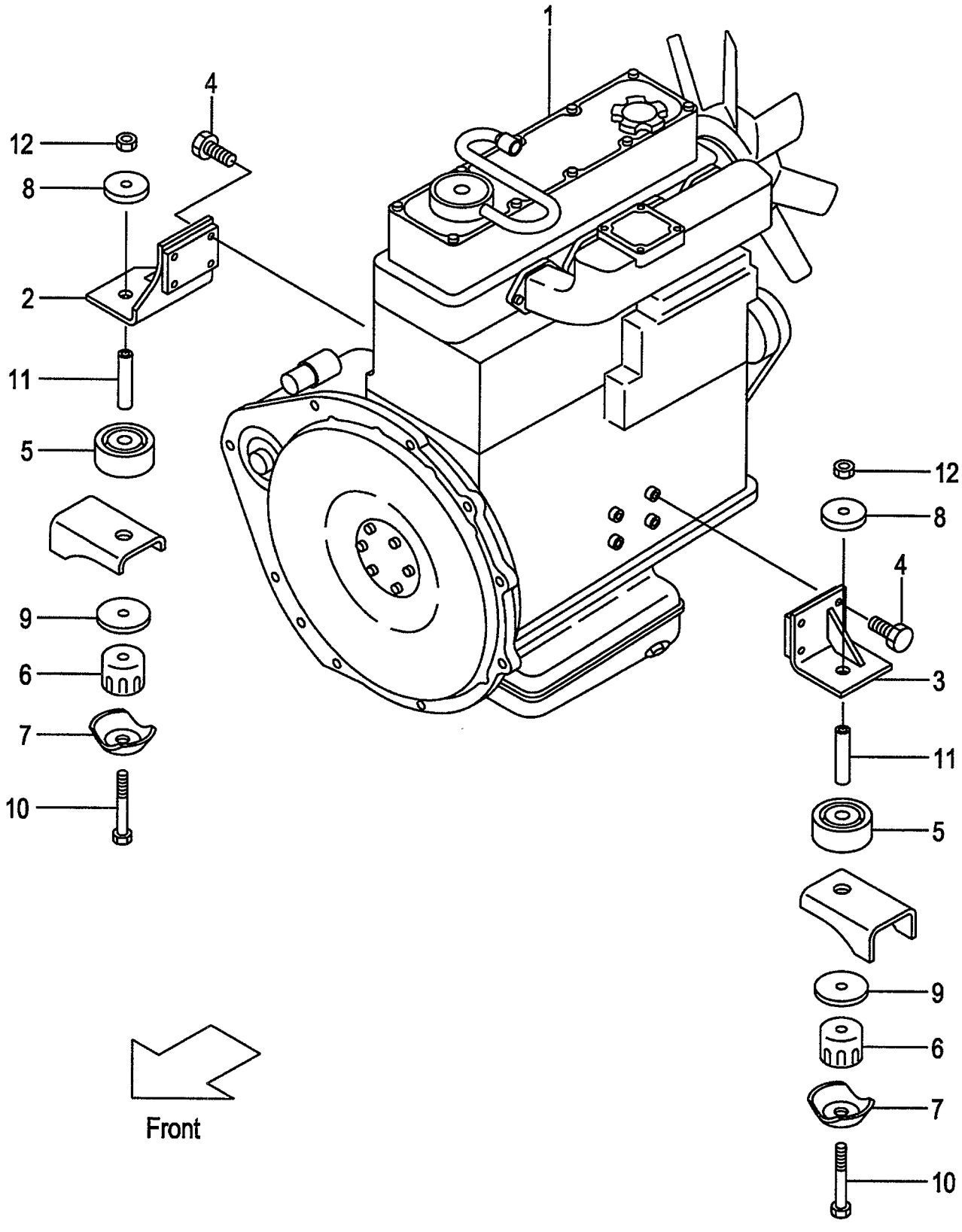

A:FD20C7 FD25C7
B:FD20T7 FD25T7
C:FD20W7 FD25W7

FIG.2
(F6021020)

Item No	Part No.	Mark	Description		Req'd	Remarks : Serial No.
1	242F1-00101		ENGINE,TD27	ｴﾝｼﾞﾝ	1	A
-	242G1-00101		ENGINE,TD27	ｴﾝｼﾞﾝ	1	B
-	242S1-00101		ENGINE,TD27	ｴﾝｼﾞﾝ	1	C
2	242F1-02001		BRACKET,RH	ﾌﾞﾗｹｯﾄ	1	A,B
-	242S1-02001		BRACKET,RH	ﾌﾞﾗｹｯﾄ	1	C
3	242F1-02051		BRACKET,LH	ﾌﾞﾗｹｯﾄ	1	
4	01218-10040		BOLT	ﾎﾞﾙﾄ	8	
5	216G1-02111		RUBBER,UNDER	ﾗﾊﾞｰ	2	
6	214A1-02111		RUBBER,UPPER	ﾗﾊﾞｰ	2	
7	214A1-02121		CAP	ｷｬｯﾌﾟ	2	
8	23651-02001		PLATE	ﾌﾟﾚｰﾄ	2	
9	534A5-13011		WASHER	ﾜｯｼｬ	2	
10	01103-10097		BOLT	ﾎﾞﾙﾄ	2	
11	234A1-02071		COLLAR	ｶﾗｰ	2	
12	23651-02011		NUT	ﾅｯﾄ	2	

FIG.3 AIR CLEANER

(F6021040) エアークリーナ

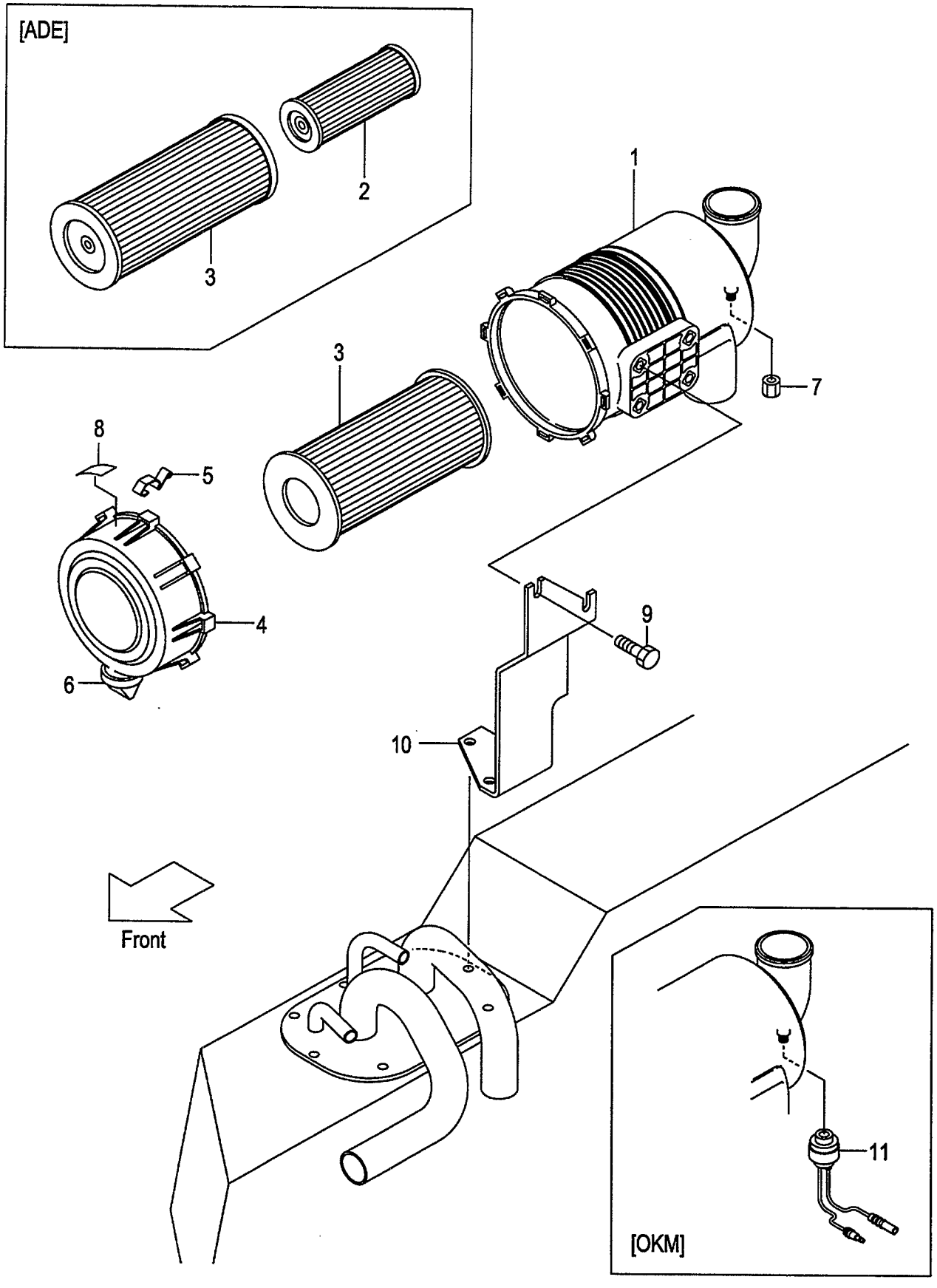

A:FD20C18 C:FD25C18
B:FD20T18 D:FD25T18

FIG.3
(F6021040)

Item No	Part No.	Mark	Description		Req'd	Remarks : Serial No.
A1	216G1-02451		CLEANER-ASSY,AIR	ｴｱｰｸﾘｰﾅｱｯｾﾝ	1	INC.1,3-8
-	516G0-60101		CLEANER-ASSY,AIR	ｴｱｰｸﾘｰﾅｱｯｾﾝ	1	[ADE] INC.1-8
1	216G1-02481		BODY	ﾎﾞﾃﾞｨ	1	
2	213T1-02021		ELEMENT,INNER	ｴﾚﾒﾝﾄ	1	[ADE]
3	256C1-08011		ELEMENT,OUTER	ｴﾚﾒﾝﾄ	1	
-	213T1-02011		ELEMENT,OUTER	ｴﾚﾒﾝﾄ	1	[ADE]
4	216G1-02461		COVER	ｶﾊﾞｰ	1	
5	216G1-02471		LATCH	ﾗｯﾁ	3	
6	216G1-02491		VALVE,VACUATOR	ﾊﾞﾙﾌﾞ	1	
7	53651-12551		CAP,NIPPLE	ｷｬｯﾌﾟ	1	
8	216G1-02501		LABEL	ﾗﾍﾞﾙ	1	
-	516G0-62011		LABEL	ﾗﾍﾞﾙ	1	[ADE]
9	01183-08016		BOLT	ﾎﾞﾙﾄ	2	
10	237A1-02101		BRACKET,AIR-CLEANER	ﾌﾞﾗｹｯﾄ	1	
-	237H1-02001		BRACKET,AIR-CLEANER	ﾌﾞﾗｹｯﾄ	1	A,C [PC]
11	54612-42021		SENSOR,635MM	ｾﾝｻ	1	[OKM]

FIG.4 AIR CLEANER
(F6021050) エアークリーナ

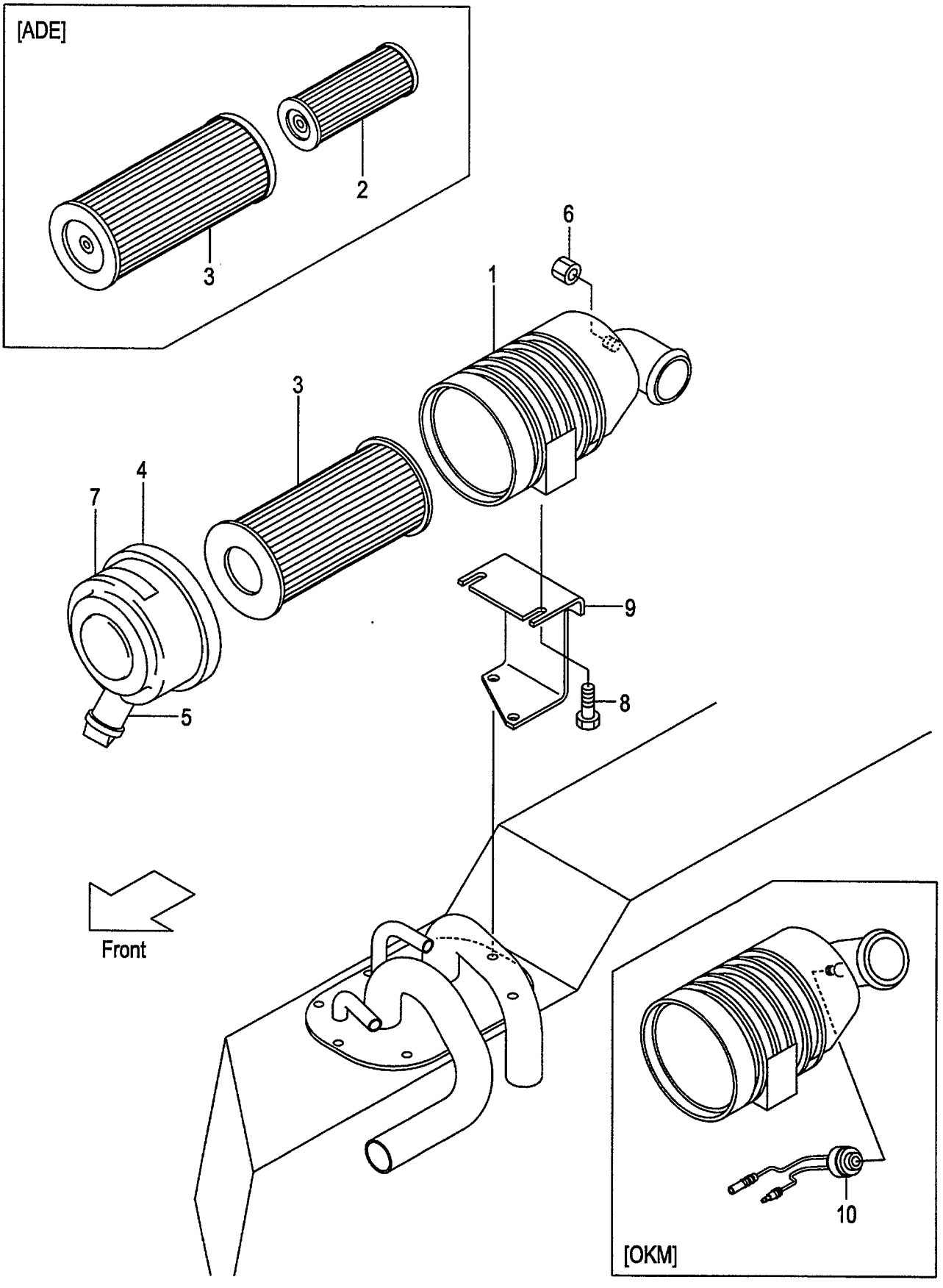

A:FD20C7 FD25C7
B:FD20T7 FD25T7
C:FD20W7 FD25W7

FIG.4
(F6021050)

Item No	Part No.	Mark	Description		Req'd	Remarks : Serial No.
A1	234A1-00101		CLEANER-ASSY,AIR	ｴｱｰｸﾘｰﾅｱｯｾﾝ	1	INC.1,3-7
-	534A0-60011		CLEANER-ASSY,AIR	ｴｱｰｸﾘｰﾅｱｯｾﾝ	1	[ADE] INC.1-7
1	234A1-00111		BODY	ﾎﾞﾃﾞｨ	1	
2	534A0-62011		ELEMENT,INNER	ｴﾚﾒﾝﾄ	1	[ADE]
3	256G1-08011		ELEMENT,OUTER	ｴﾚﾒﾝﾄ	1	
-	534A0-62001		ELEMENT,OUTER	ｴﾚﾒﾝﾄ	1	[ADE]
4	256G1-08021		COVER	ｶﾊﾞｰ	1	
5	256A1-08031		VALVE,VACUATOR	ﾊﾞﾙﾌﾞ	1	
6	53651-12551		CAP,NIPPLE	ｷｬｯﾌﾟ	1	
7	234A1-00121		LABEL	ﾗﾍﾞﾙ	1	
-	516G0-62001		LABEL	ﾗﾍﾞﾙ	1	[ADE]
8	01183-08016		BOLT	ﾎﾞﾙﾄ	2	
9	239A1-02511		BRACKET,AIR-CLEANER	ﾌﾞﾗｹｯﾄ	1	A,B
-	239H1-02001		BRACKET,AIR-CLEANER	ﾌﾞﾗｹｯﾄ	1	C
-	239H1-02001		BRACKET,AIR-CLEANER	ﾌﾞﾗｹｯﾄ	1	A [PC]
10	522A1-10201		SENSOR,762MM	ｾﾝｻ	1	[OKM]

FIG.5 AIR DUCT
(F6021070) エアーダクト

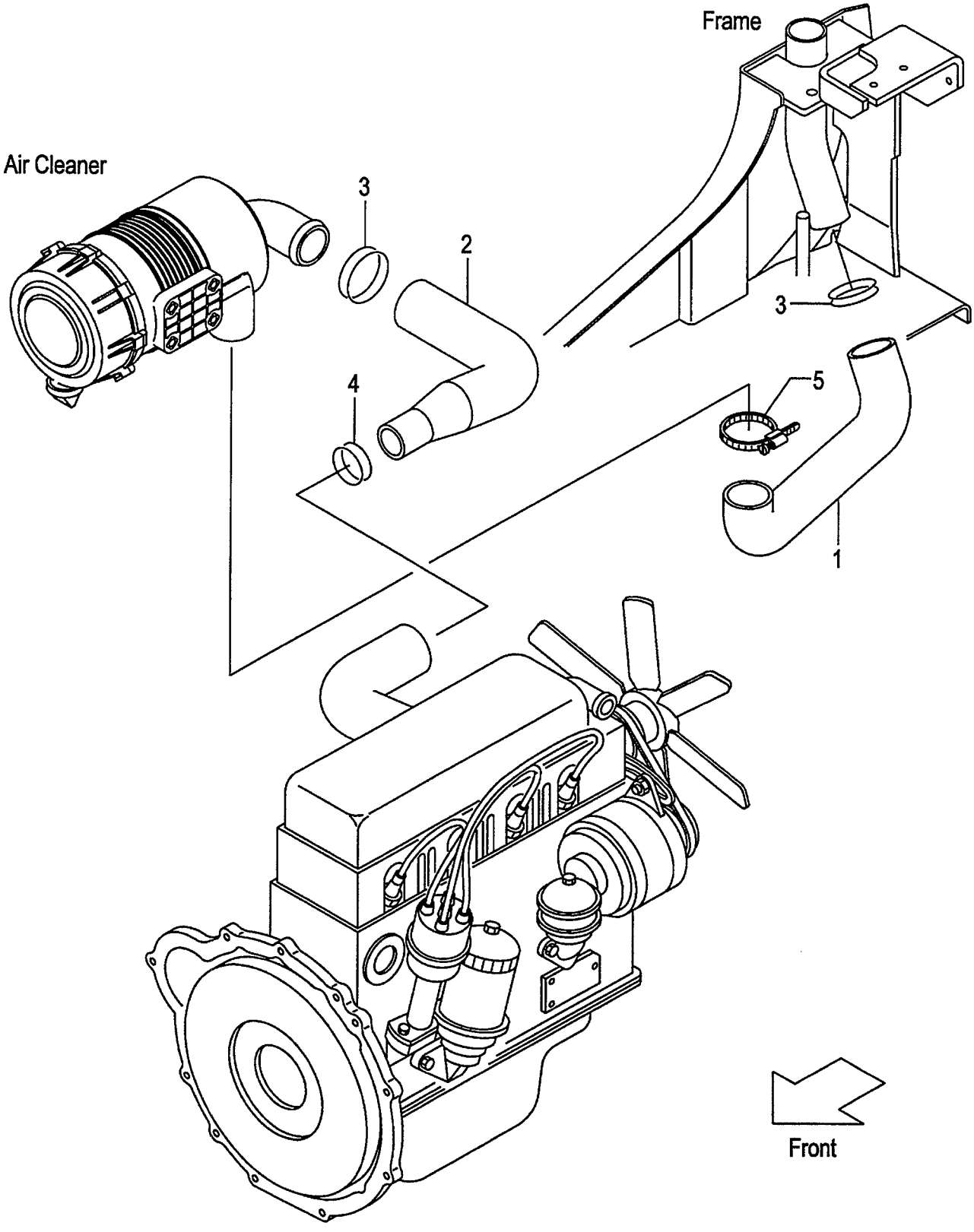

FIG.5
(F6021070)

A:FD20C18 FD20T18 FD25C18 FD25T18

Item No	Part No.	Mark	Description		Req'd	Remarks : Serial No.
1	218G1-02101		HOSE,AIR-DUCT	ﾎｰｽ	1	
2	242E1-02001		HOSE,AIR-INTAKE	ﾎｰｽ	1	
3	04911-00060		CLIP	ｸﾘｯﾌﾟ	2	
4	04911-00044		CLIP	ｸﾘｯﾌﾟ	1	
5	224W4-52071		BAND	ﾊﾞﾝﾄﾞ	1	

FIG.6 AIR DUCT
(F6021080) エアーダクト

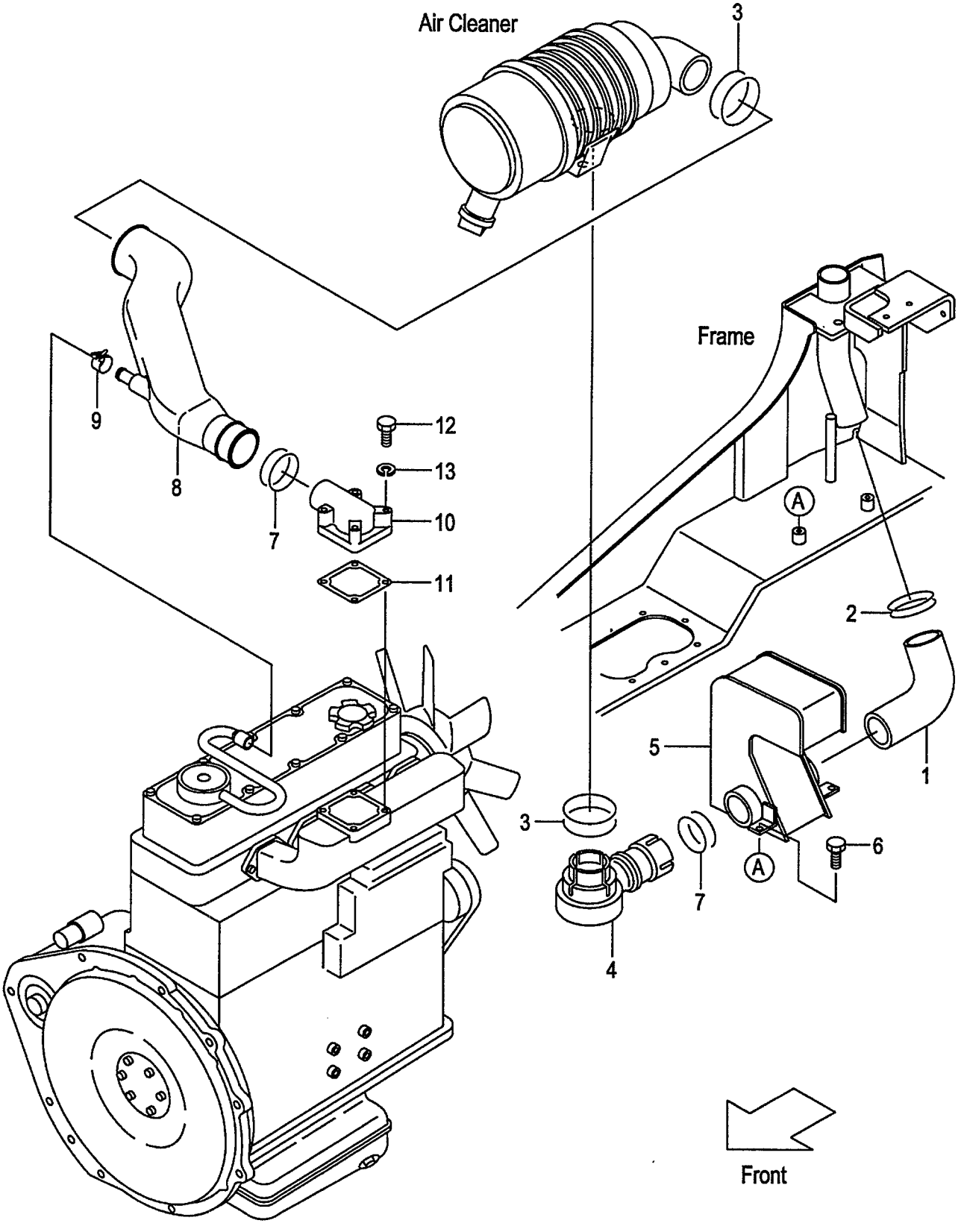

FIG.6
(F6021080)

A:FD20C7 FD20T7 FD25C7 FD25T7 FD20W7 FD25W7

Item No	Part No.	Mark	Description		Req'd	Remarks : Serial No.
1	217M1-02031		HOSE,AIR-DUCT	ﾎｰｽ	1	
2	04911-00060		CLIP	ｸﾘｯﾌﾟ	1	
3	04911-00070		CLIP	ｸﾘｯﾌﾟ	2	
4	234A1-02001		INTAKE,AIR	ｲﾝﾃｰｸ	1	
5	217M1-02402		RESONATOR	ﾚｿﾞﾈｰﾀ	1	
6	01185-08016		BOLT	ﾎﾞﾙﾄ	2	
7	04911-00055		CLIP	ｸﾘｯﾌﾟ	2	
8	242F1-02101		PIPE,AIR-INTAKE	ﾊﾟｲﾌﾟ	1	
9	23652-22121		CLIP	ｸﾘｯﾌﾟ	1	
10	242F1-02111		INTAKE,AIR	ｲﾝﾃｰｸ	1	
11	242F1-02121		GASKET	ｶﾞｽｹｯﾄ	1	
12	01100-08065		BOLT	ﾎﾞﾙﾄ	4	
13	02010-00008		WASHER	ﾜｯｼｬ	4	

FIG.7 PRE CLEANER [CAKB]

(F6021090) ﾌﾟﾚｸﾘｰﾅ

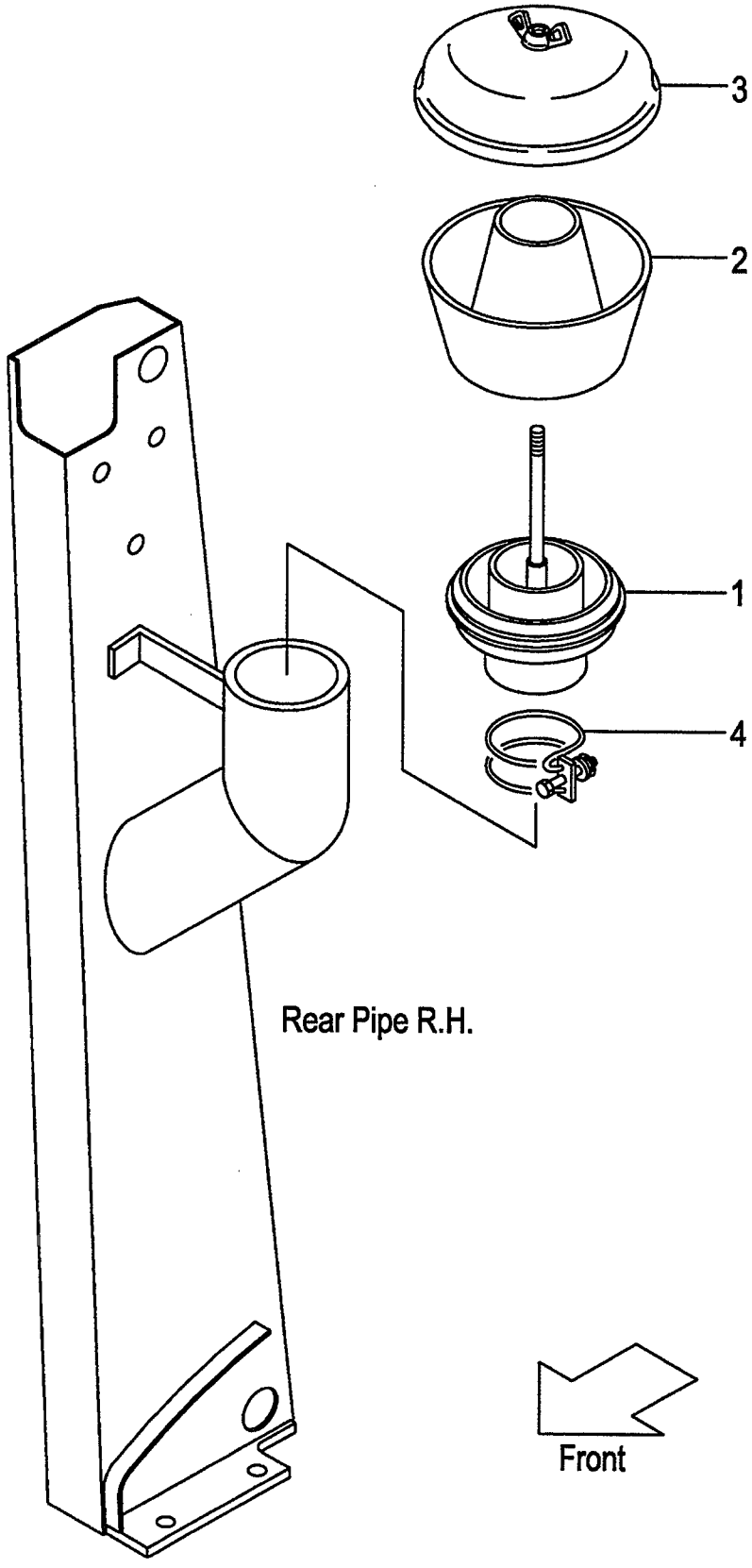

A:FD20C18 FD20T18 FD25C18 FD25T18
B:FD20C7 FD20T7 FD25C7 FD25T7 FD20W7 FD25W7

FIG.7
(F6021090)

Item No	Part No.	Mark	Description		Req'd	Remarks : Serial No.
A1	522B0-92021		CLEANER-ASSY,PRE	ﾌﾟﾚｸﾘｰﾅｱｯｾﾝ	1	[CAKB] INC.1-3
1	522B0-92031		SLEEVE	ｽﾘｰﾌﾞ	1	[CAKB]
2	522B0-92041		BODY	ﾎﾞﾃﾞｨ	1	[CAKB]
3	522B0-92051		COVER	ｶﾊﾞｰ	1	[CAKB]
4	04911-00090		CLIP	ｸﾘｯﾌﾟ	1	[CAKB]

FIG.8 COOLING UNIT (CLUTCH)

(F6022120) クーリング゛ユニット

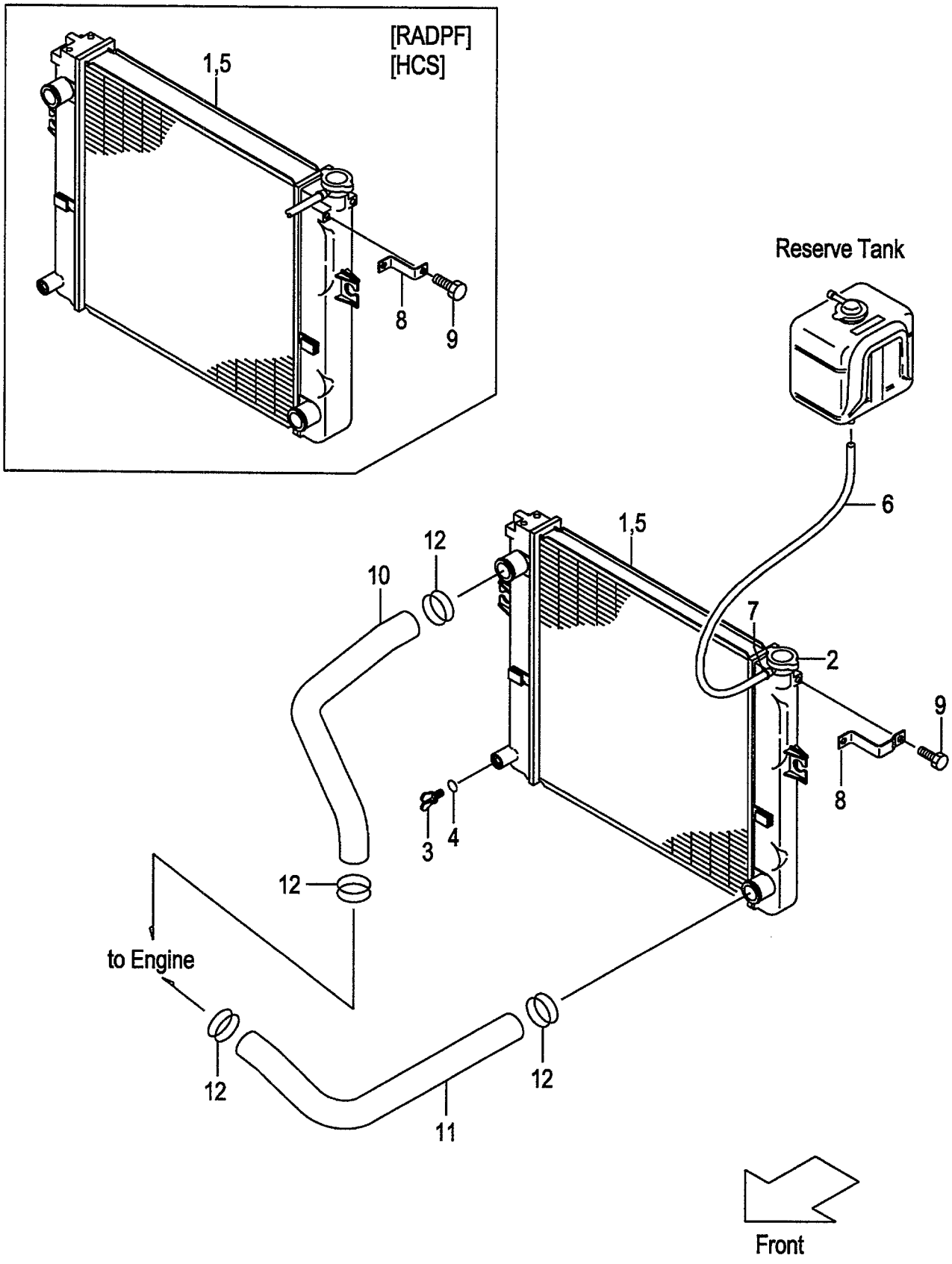

FIG.8
(F6022120)

A:FD20C18 FD25C18

Item No	Part No.	Mark	Description		Req'd	Remarks : Serial No.
A1	239A2-10102		RADIATOR-ASSY	ﾗｼﾞｴｰﾀｱｯｾﾝ	1	INC.1-7
-	539A6-60302		RADIATOR-ASSY	ﾗｼﾞｴｰﾀｱｯｾﾝ	1	[RADPF][HCS] INC.1-7
1	NO PART NO.	#	RADIATOR	ﾗｼﾞｴｰﾀ	1	
-	NO PART NO.	#	RADIATOR	ﾗｼﾞｴｰﾀ	1	[RADPF][HCS]
2	222A2-10211		CAP	ｷｬｯﾌﾟ	1	
3	234A2-12201		COCK	ｺｯｸ	1	
4	234A2-12211		O-RING	Oﾘﾝｸﾞ	1	
5	NO PART NO.	#	NUT	ﾅｯﾄ	3	
-	NO PART NO.	#	NUT	ﾅｯﾄ	4	[RADPF][HCS]
6	NO PART NO.		HOSE	ﾎｰｽ	1	
7	23772-12071		CLIP	ｸﾘｯﾌﾟ	1	
8	239A2-12141		BRACKET	ﾌﾞﾗｹｯﾄ	1	
-	239B2-12141		BRACKET	ﾌﾞﾗｹｯﾄ	1	[RADPF][HCS]
9	01185-08016		BOLT	ﾎﾞﾙﾄ	1	
10	242E2-12001		HOSE,UPPER	ﾎｰｽ	1	
11	242E2-12011		HOSE,LOWER	ﾎｰｽ	1	
12	04911-00044		CLIP	ｸﾘｯﾌﾟ	4	

FIG.9 COOLING UNIT (CLUTCH)

(F6022130) クーリングユニット

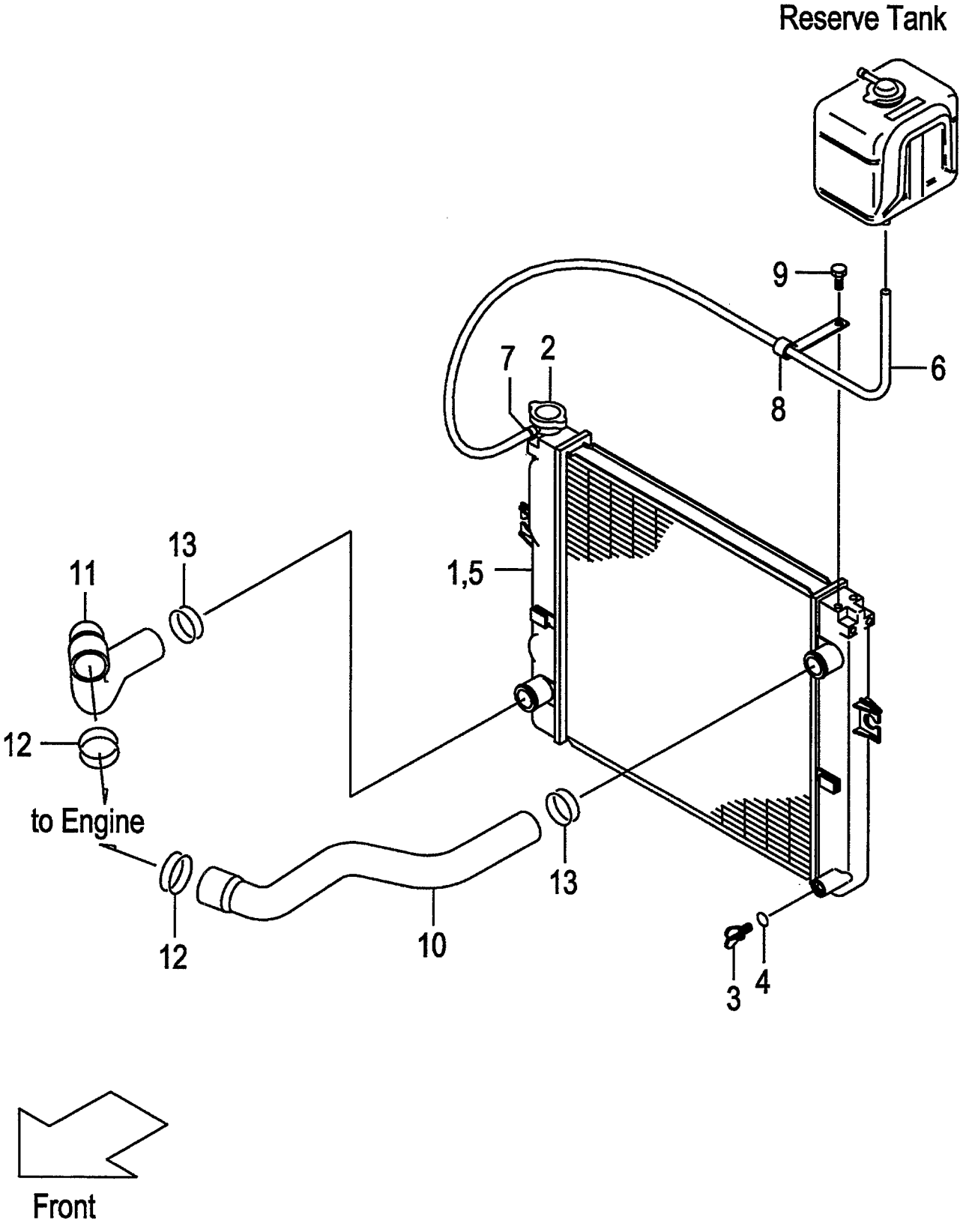

FIG.9
(F6022130)

A:FD20C7 FD25C7

Item No	Part No.	Mark	Description		Req'd	Remarks : Serial No.
A1	237A2-10102		RADIATOR-ASSY	ﾗｼﾞｴｰﾀｱｯｾﾝ	1	INC.1-7
-	537A6-60302		RADIATOR-ASSY	ﾗｼﾞｴｰﾀｱｯｾﾝ	1	[RADPF][HCS][EXK] INC.1-7
1	NO PART NO.	#	RADIATOR	ﾗｼﾞｴｰﾀ	1	
-	NO PART NO.	#	RADIATOR	ﾗｼﾞｴｰﾀ	1	[RADPF][HCS][EXK]
2	222A2-10211		CAP	ｷｬｯﾌﾟ	1	
3	234A2-12201		COCK	ｺｯｸ	1	
4	234A2-12211		O-RING	Oﾘﾝｸﾞ	1	
5	NO PART NO.	#	NUT	ﾅｯﾄ	3	
-	NO PART NO.	#	NUT	ﾅｯﾄ	4	[RADPF][HCS][EXK]
6	NO PART NO.		HOSE	ﾎｰｽ	1	
7	23772-12071		CLIP	ｸﾘｯﾌﾟ	1	
8	214A2-42331		CLIP	ｸﾘｯﾌﾟ	1	
9	01185-08016		BOLT	ﾎﾞﾙﾄ	1	
10	242F2-12001		HOSE,UPPER	ﾎｰｽ	1	
11	242F2-12051		HOSE,LOWER	ﾎｰｽ	1	
12	04911-00053		CLIP	ｸﾘｯﾌﾟ	2	
13	04911-00044		CLIP	ｸﾘｯﾌﾟ	2	

FIG.10 COOLING UNIT (TOR-CON)

(F6022140) クーリングユニット

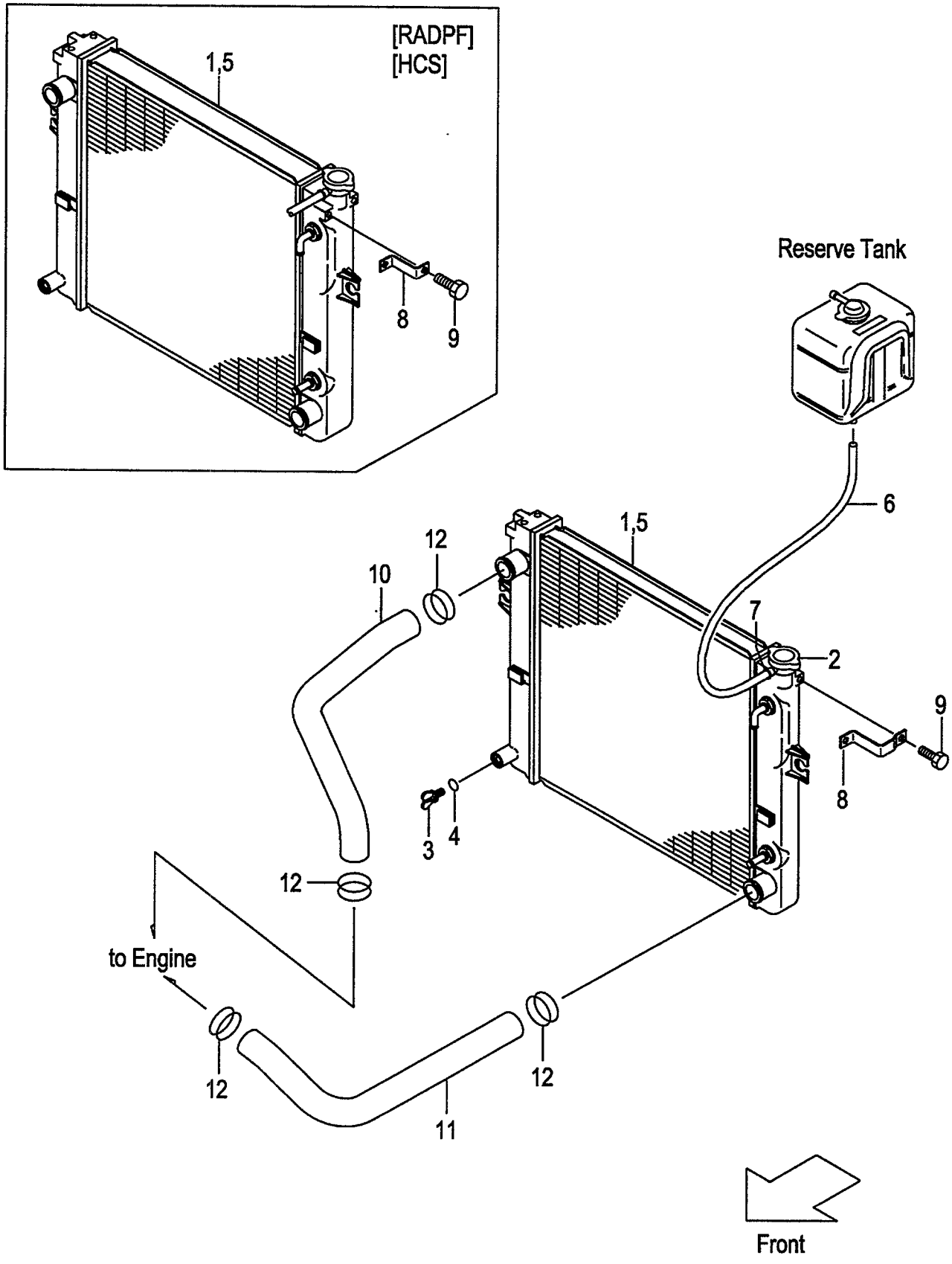

FIG.10
(F6022140)

A:FD20T18 FD25T18

Item No	Part No.	Mark	Description		Req'd	Remarks : Serial No.
A1	238B2-10102		RADIATOR-ASSY	ﾗｼﾞｴｰﾀｱｯｾﾝ	1	INC.1-7
-	538B6-60302		RADIATOR-ASSY	ﾗｼﾞｴｰﾀｱｯｾﾝ	1	[RADPF][HCS] INC.1-7
1	NO PART NO.	#	RADIATOR	ﾗｼﾞｴｰﾀ	1	
-	NO PART NO.	#	RADIATOR	ﾗｼﾞｴｰﾀ	1	[RADPF][HCS]
2	222A2-10211		CAP	ｷｬｯﾌﾟ	1	
3	234A2-12201		COCK	ｺｯｸ	1	
4	234A2-12211		O-RING	Oﾘﾝｸﾞ	1	
5	NO PART NO.	#	NUT	ﾅｯﾄ	3	
-	NO PART NO.	#	NUT	ﾅｯﾄ	4	[RADPF][HCS]
6	NO PART NO.		HOSE	ﾎｰｽ	1	
7	23772-12071		CLIP	ｸﾘｯﾌﾟ	1	
8	239A2-12141		BRACKET	ﾌﾞﾗｹｯﾄ	1	
-	239B2-12141		BRACKET	ﾌﾞﾗｹｯﾄ	1	[RADPF][HCS]
9	01185-08016		BOLT	ﾎﾞﾙﾄ	1	
10	242E2-12001		HOSE,UPPER	ﾎｰｽ	1	
11	242E2-12011		HOSE,LOWER	ﾎｰｽ	1	
12	04911-00044		CLIP	ｸﾘｯﾌﾟ	4	

FIG.11 COOLING UNIT (TOR-CON)(OIL CLUTCH)

(F6022150) クーリング゛ユニット

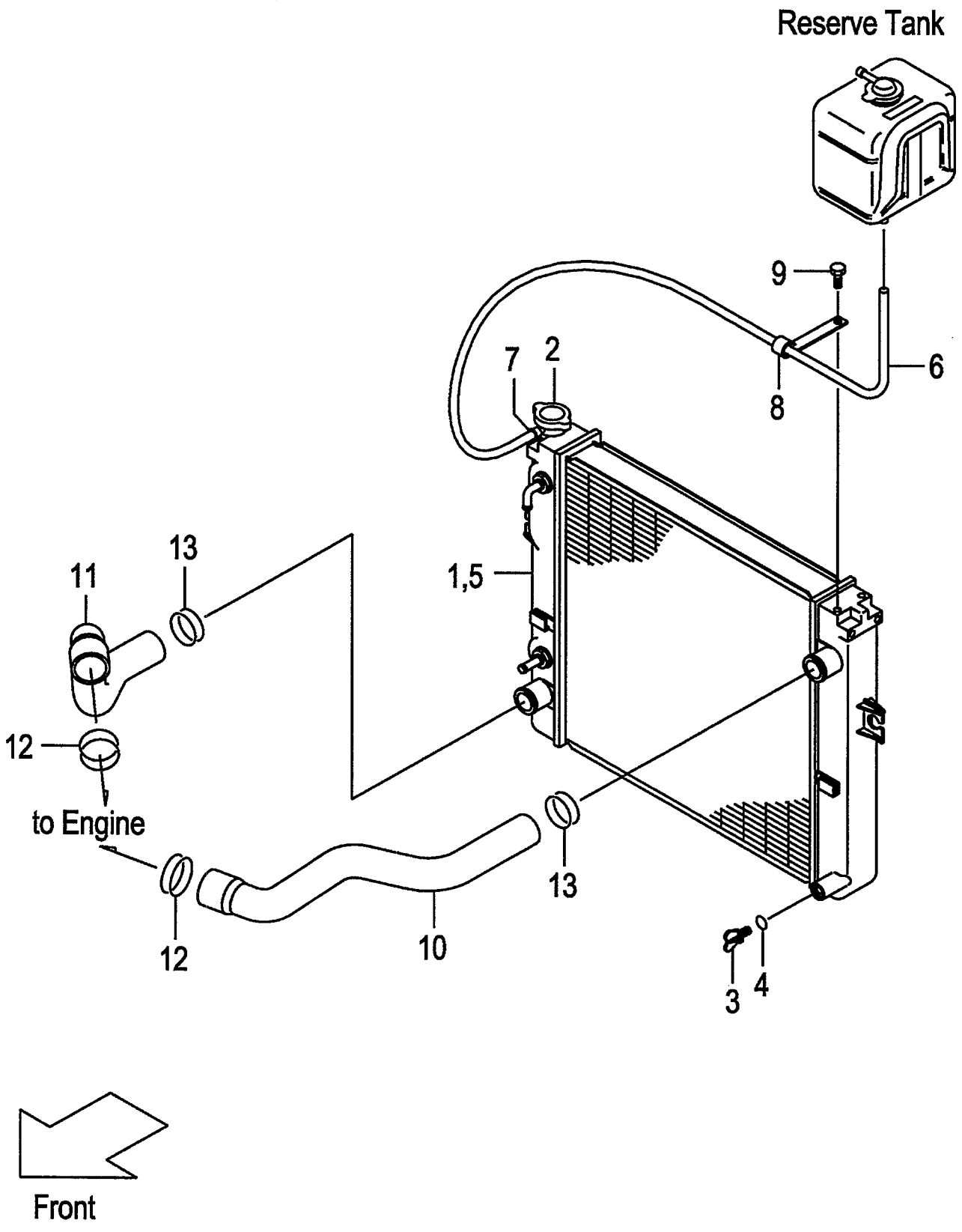

A:FD20T7 FD25T7
B:FD20W7 FD25W7

FIG.11
(F6022150)

Item No	Part No.	Mark	Description		Req'd	Remarks : Serial No.
A1	236L2-10102		RADIATOR-ASSY	ﾗｼﾞｴｰﾀｱｯｾﾝ	1	A INC.1-7
-	237H2-10102		RADIATOR-ASSY	ﾗｼﾞｴｰﾀｱｯｾﾝ	1	B INC.1-7
-	536B6-60302		RADIATOR-ASSY	ﾗｼﾞｴｰﾀｱｯｾﾝ	1	A [RADPF][HCS][EXK] INC.1-7
-	537A6-60302		RADIATOR-ASSY	ﾗｼﾞｴｰﾀｱｯｾﾝ	1	B [RADPF][HCS] INC.1-7
1	NO PART NO.	#	RADIATOR	ﾗｼﾞｴｰﾀ	1	A
-	NO PART NO.	#	RADIATOR	ﾗｼﾞｴｰﾀ	1	B
-	NO PART NO.	#	RADIATOR	ﾗｼﾞｴｰﾀ	1	A [RADPF][HCS][EXK]
-	NO PART NO.	#	RADIATOR	ﾗｼﾞｴｰﾀ	1	B [RADPF][HCS]
2	222A2-10211		CAP	ｷｬｯﾌﾟ	1	
3	234A2-12201		COCK	ｺｯｸ	1	
4	234A2-12211		O-RING	Oﾘﾝｸﾞ	1	
5	NO PART NO.	#	NUT	ﾅｯﾄ	4	
6	NO PART NO.		HOSE	ﾎｰｽ	1	
7	23772-12071		CLIP	ｸﾘｯﾌﾟ	1	
8	214A2-42331		CLIP	ｸﾘｯﾌﾟ	1	
9	01185-08016		BOLT	ﾎﾞﾙﾄ	1	
10	242F2-12001		HOSE,UPPER	ﾎｰｽ	1	
11	242F2-12051		HOSE,LOWER	ﾎｰｽ	1	
12	04911-00053		CLIP	ｸﾘｯﾌﾟ	2	
13	04911-00044		CLIP	ｸﾘｯﾌﾟ	2	

FIG.12 RADIATOR PARTS & RESERVE TANK

(F6022160) ﾗｼﾞｴｰﾀﾊﾟｰﾂ&ﾘｻﾞｰﾌﾞﾀﾝｸ

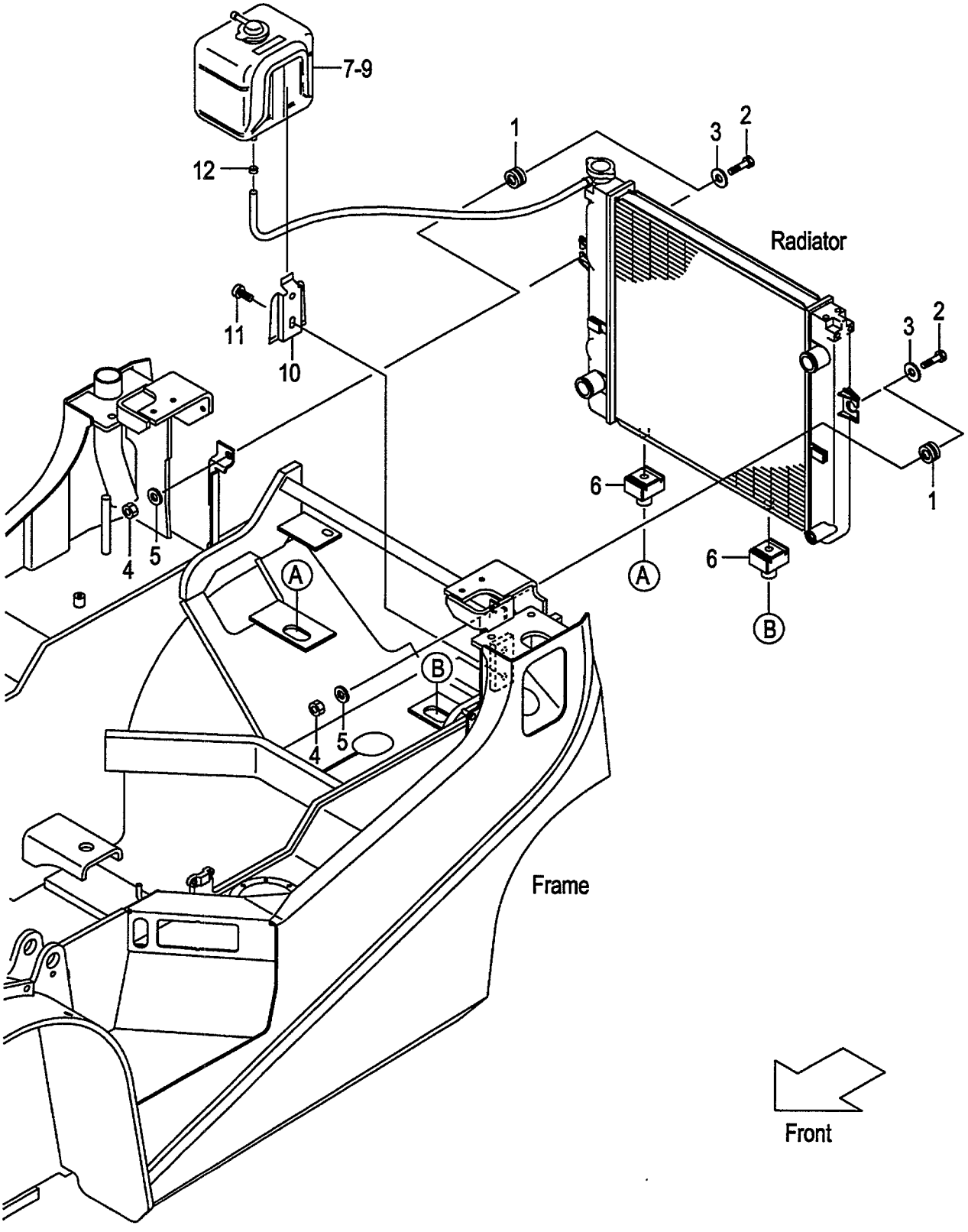

FIG.12
(F6022160)

A:FD20C18 FD20T18 FD25C18 FD25T18
B:FD20C7 FD20T7 FD25C7 FD25T7 FD20W7 FD25W7

Item No	Part No.	Mark	Description		Req'd	Remarks : Serial No.
1	214A2-12001		RUBBER	ﾗﾊﾞｰ	2	
2	214A2-12021		BOLT	ﾎﾞﾙﾄ	2	
3	22252-32251		WASHER	ﾜｯｼｬ	2	
4	23652-12051		NUT	ﾅｯﾄ	2	
5	02000-00010		WASHER	ﾜｯｼｬ	2	
6	239A2-12021		RUBBER	ﾗﾊﾞｰ	2	
7	214A2-12111		TANK,RESERVE	ﾀﾝｸ	1	INC.8,9
-	214A2-12121		TANK,RESERVE	ﾀﾝｸ	1	[OKM] INC.8,9
8	214A2-13001		CAP	ｷｬｯﾌﾟ	1	
9	214A2-13011		PACKING	ﾊﾟｯｷﾝｸﾞ	1	
10	214A2-12141		BRACKET	ﾌﾞﾗｹｯﾄ	1	
11	214A2-42611		SCREW	ｽｸﾘｭ	2	
12	214A2-12201		CLIP	ｸﾘｯﾌﾟ	1	

FIG.13 FAN SHROUD

(F6022190) ﾌｧﾝｼｭﾗｳﾄﾞ

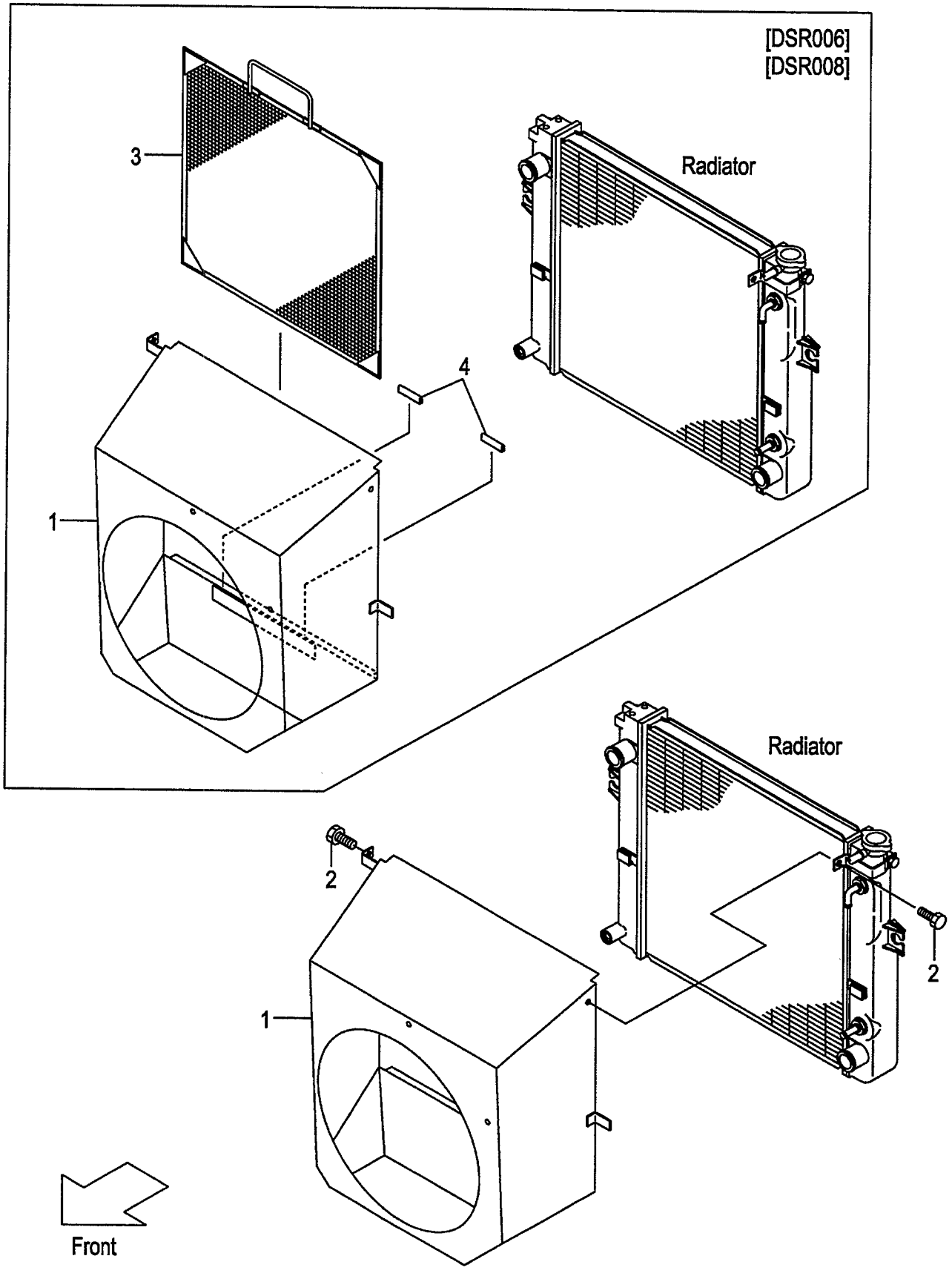

FIG.13
(F6022190)

A:FD20C18 FD20T18 FD25C18 FD25T18

Item No	Part No.	Mark	Description		Req'd	Remarks : Serial No.
1	242E2-12201		SHROUD,FAN	ｼｭﾗｳﾄﾞ	1	
-	542E6-52001		SHROUD,FAN	ｼｭﾗｳﾄﾞ	1	[DSR006][DSR008]
2	01185-08016		BOLT	ﾎﾞﾙﾄ	2	
3	539A6-52051		SCREEN,DUST	ｽｸﾘｰﾝ	1	[DSR006]
-	539A6-52151		SCREEN,DUST	ｽｸﾘｰﾝ	1	[DSR008]
4	209P6-42831		EDGING	ｴｯｼﾞﾝｸﾞ	2	[DSR006][DSR008]

FIG.14 FAN SHROUD (CLUTCH)(TOR-CON)

(F60221A0) ﾌｧﾝｼｭﾗｳﾄﾞ

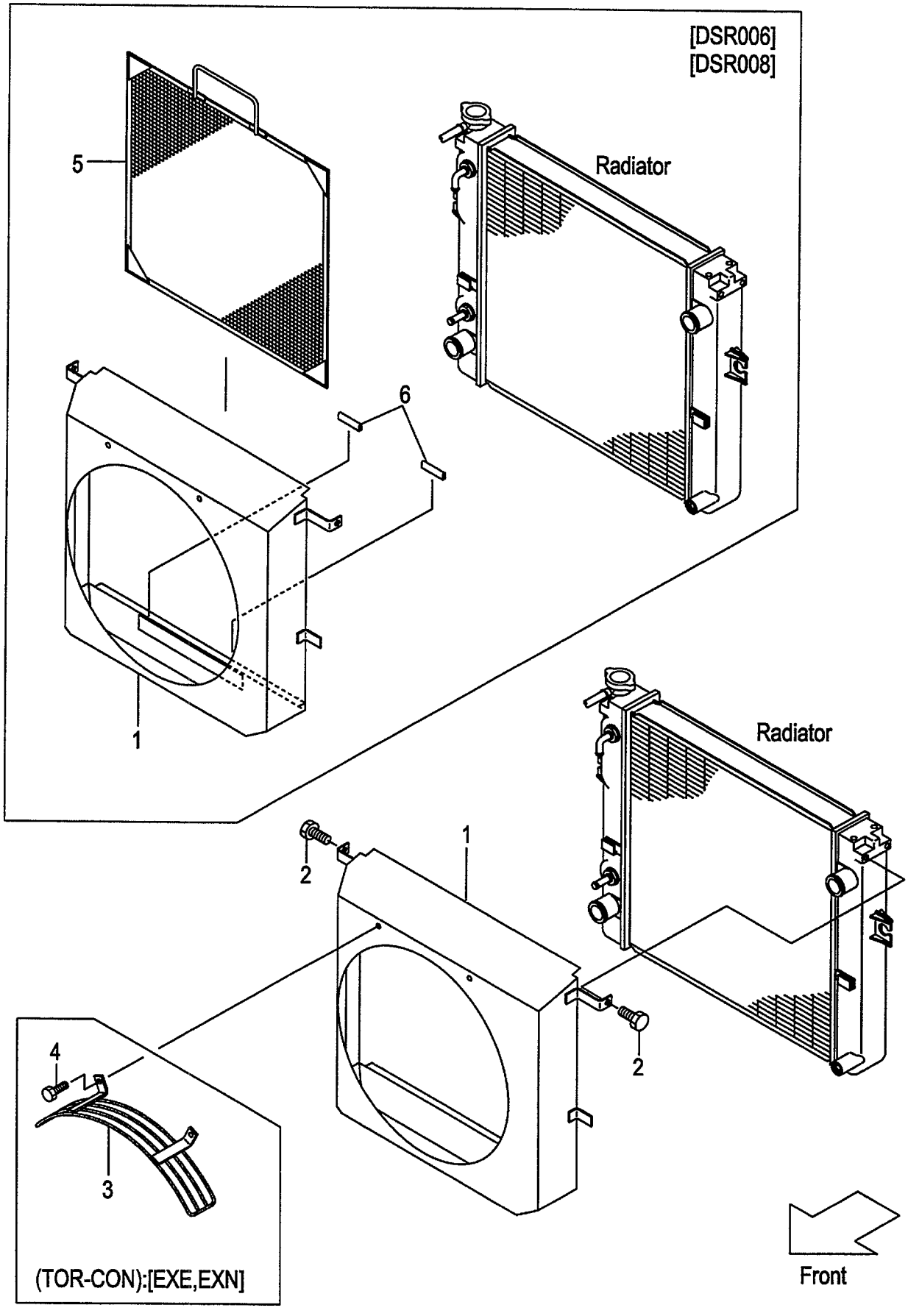

A:FD20C7 FD25C7
B:FD20T7 FD25T7

FIG.14
(F60221A0)

Item No	Part No.	Mark	Description		Req'd	Remarks : Serial No.
1	242F2-12201		SHROUD,FAN	ｼｭﾗｳﾄﾞ	1	
-	542F6-52001		SHROUD,FAN	ｼｭﾗｳﾄﾞ	1	[DSR006][DSR008]
2	01185-08016		BOLT	ﾎﾞﾙﾄ	2	
3	532B3-82201		GUARD,FAN	ｶﾞｰﾄﾞ	1	B [EXE][EXN]
4	01185-08020		BOLT	ﾎﾞﾙﾄ	2	B [EXE][EXN]
5	539A6-52051		SCREEN,DUST	ｽｸﾘｰﾝ	1	[DSR006]
-	539A6-52151		SCREEN,DUST	ｽｸﾘｰﾝ	1	[DSR008]
6	209P6-42831		EDGING	ｴｯｼﾞﾝｸﾞ	2	[DSR006][DSR008]

FIG.15 FAN SHROUD (OIL CLUTCH)

(F60221B0) ﾌｧﾝｼｭﾗｳﾄﾞ

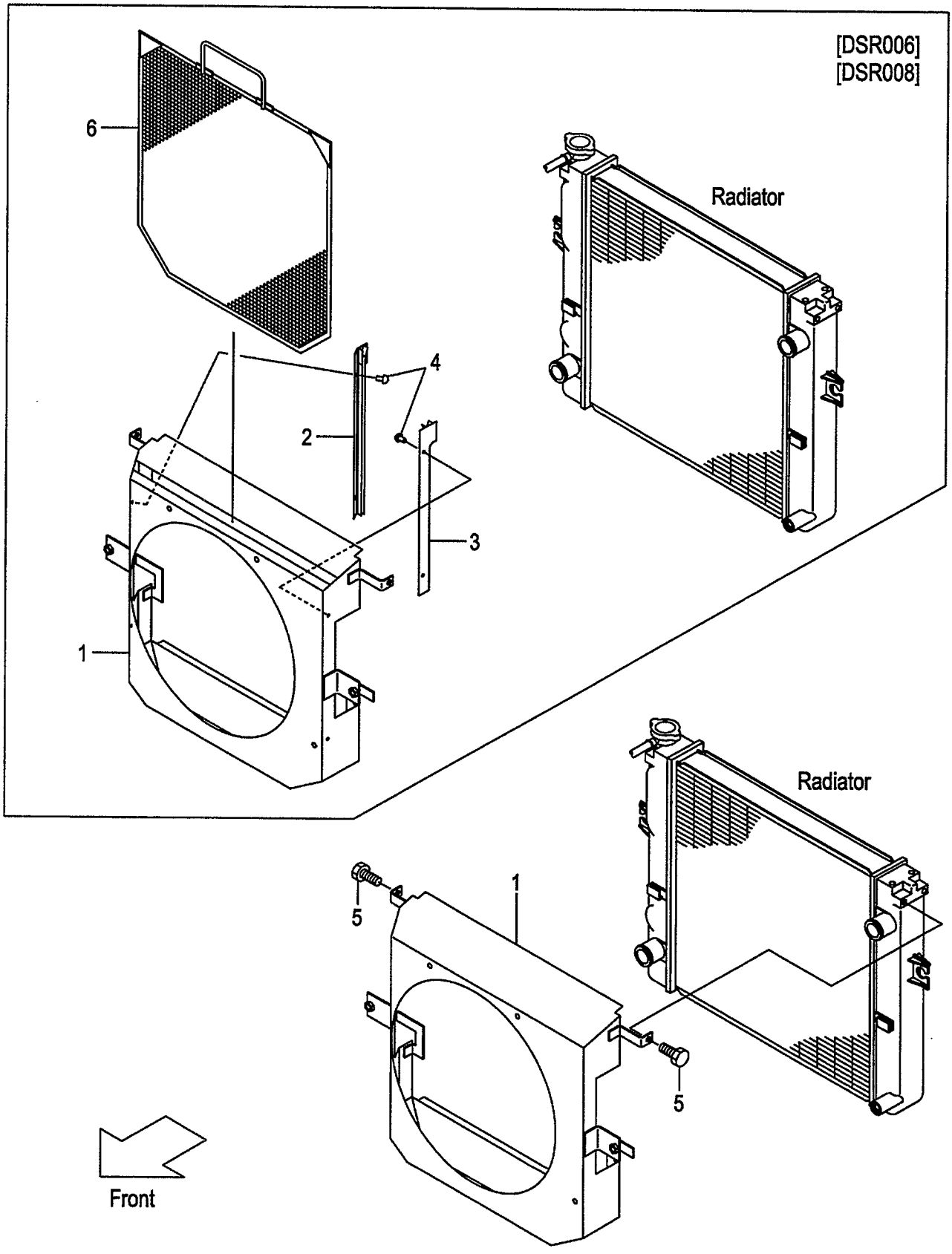

FIG.15
(F60221B0)

A:FD20W7 FD25W7

Item No	Part No.	Mark	Description		Req'd	Remarks : Serial No.
A1	542S6-50101		SHROUD-ASSY,FAN	ｼｭﾗｳﾄﾞｱｯｾﾝ	1	[DSR006][DSR008] INC.1-4
1	242S2-12201		SHROUD,FAN	ｼｭﾗｳﾄﾞ	1	
-	542S6-52201		SHROUD,FAN	ｼｭﾗｳﾄﾞ	1	[DSR006][DSR008]
2	542S6-52011		GUIDE,RH	ｶﾞｲﾄﾞ	1	[DSR006][DSR008]
3	539H6-52351		GUIDE,LH	ｶﾞｲﾄﾞ	1	[DSR006][DSR008]
4	22256-42001		RIVET	ﾘﾍﾞｯﾄ	4	[DSR006][DSR008]
5	01185-08016		BOLT	ﾎﾞﾙﾄ	2	
6	542S6-52051		SCREEN,DUST	ｽｸﾘｰﾝ	1	[DSR006]
-	542S6-52151		SCREEN,DUST	ｽｸﾘｰﾝ	1	[DSR008]

FIG.16 FUEL SYSTEM (SUPPLY)

(F6022210) フューエルシステム

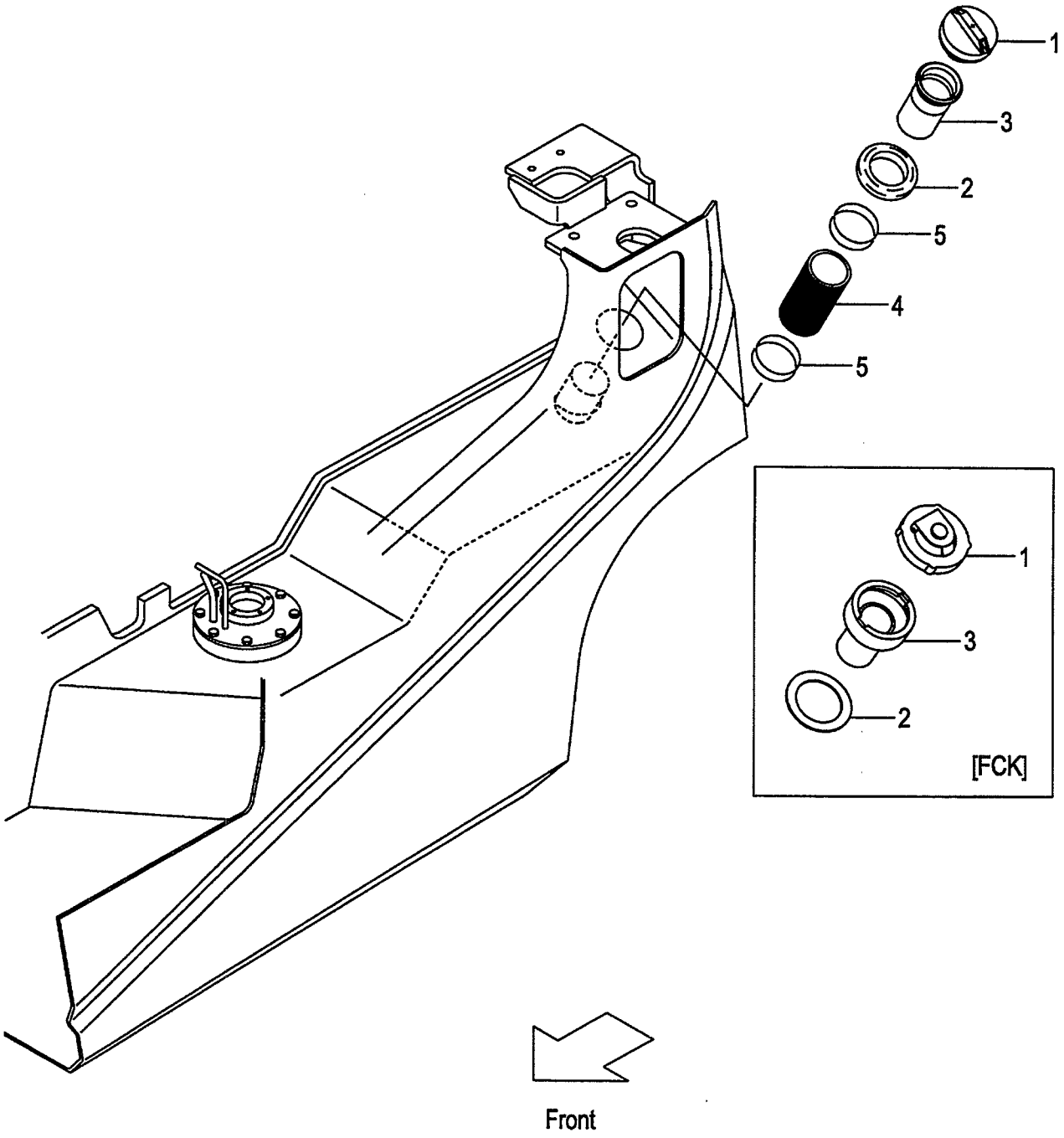

FIG.16
(F6022210)

A:FD20C18 FD20T18 FD25C18 FD25T18
B:FD20C7 FD20T7 FD25C7 FD25T7 FD20W7 FD25W7

Item No	Part No.	Mark	Description		Req'd	Remarks : Serial No.
1	216G2-22051		CAP,FUEL	ｷｬｯﾌﾟ	1	
-	518G8-12001		CAP,FUEL	ｷｬｯﾌﾟ	1	[FCK]
2	216G2-22211		GROMMET	ｸﾞﾛﾒｯﾄ	1	
-	518G8-12101		RUBBER	ﾗﾊﾞｰ	1	[FCK]
3	218G2-22001		PIPE,FUEL	ﾊﾟｲﾌﾟ	1	
-	518G8-12051		PIPE,FUEL	ﾊﾟｲﾌﾟ	1	[FCK]
4	218G2-22051		HOSE,FUEL	ﾎｰｽ	1	
5	04911-00060		CLIP	ｸﾘｯﾌﾟ	2	

FIG.17 FUEL SYSTEM (SUCTION)

(F6022220) フューエルシステム

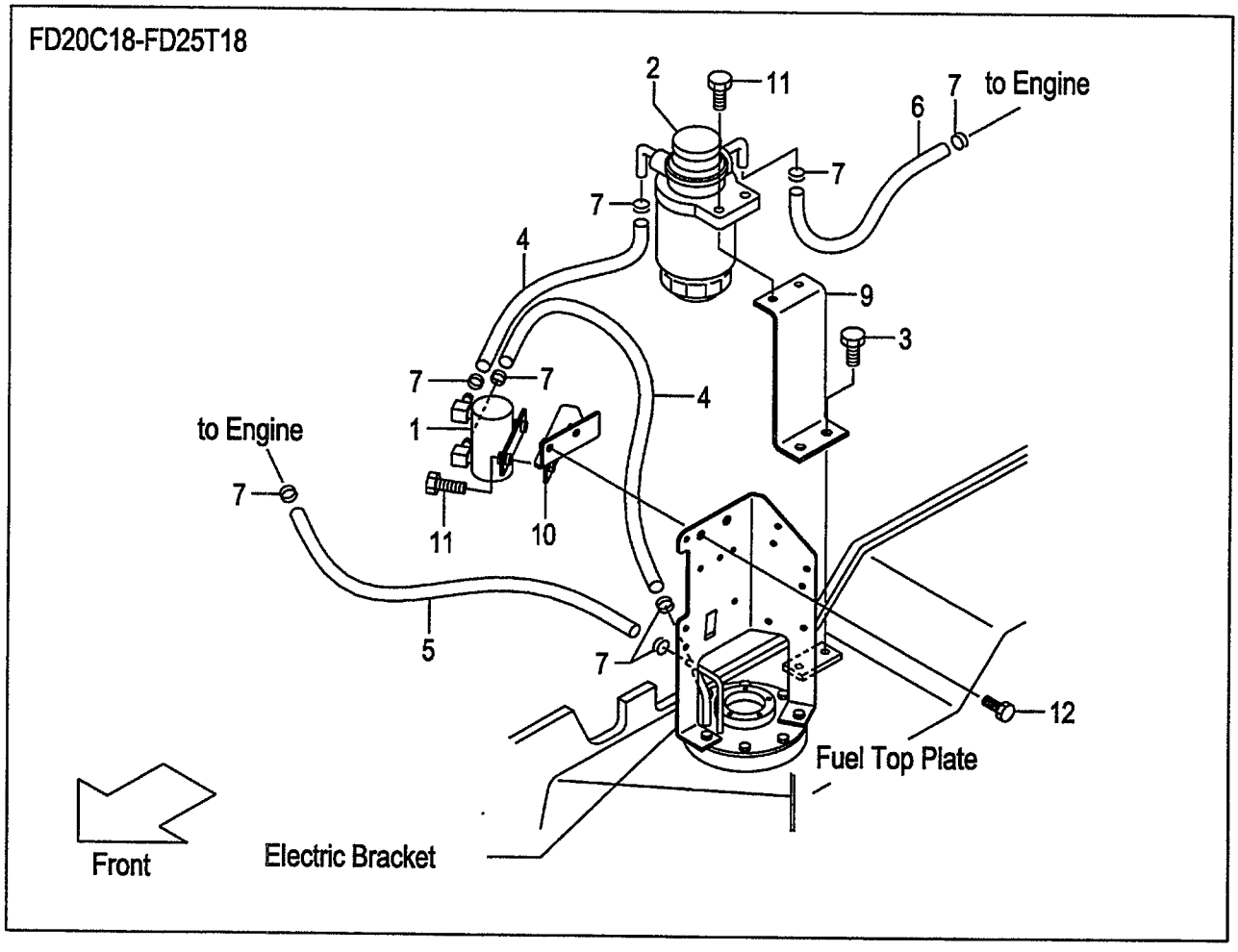

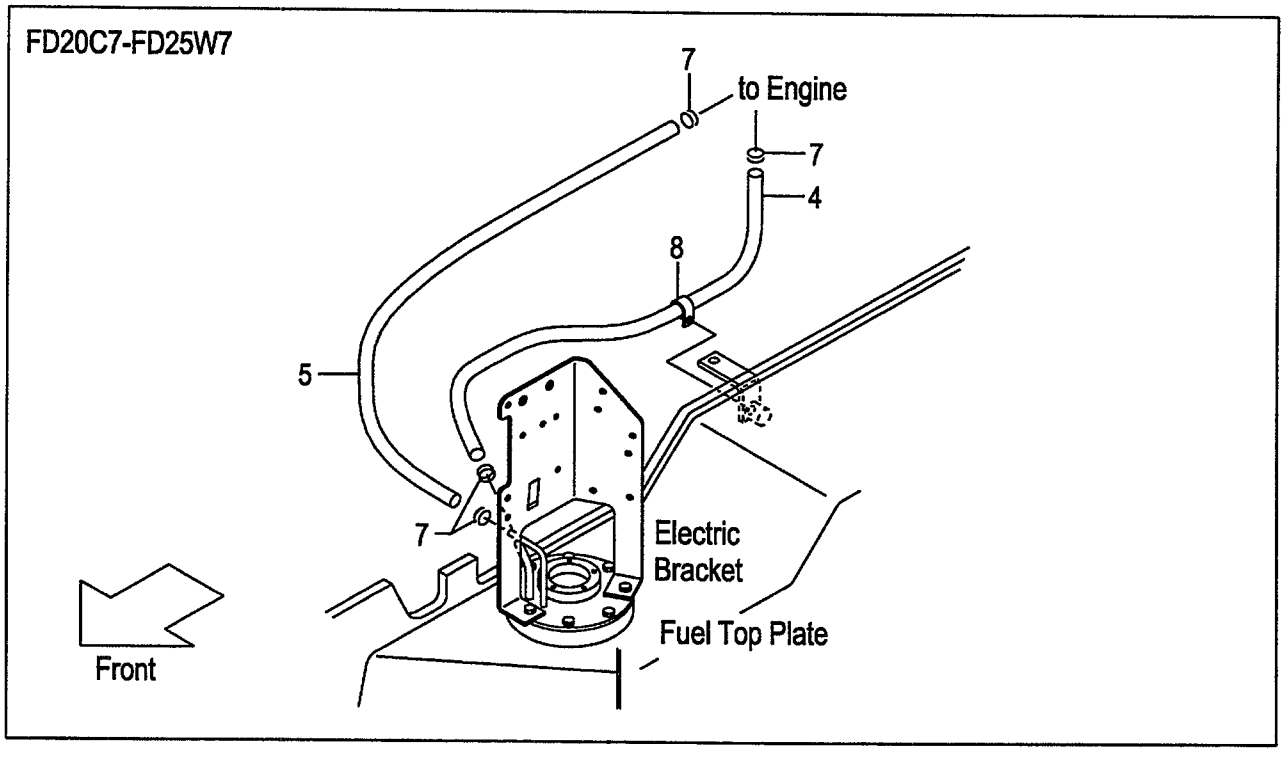

FIG.17
(F6022220)

A:FD20C18 FD20T18 FD25C18 FD25T18
B:FD20C7 FD20T7 FD25C7 FD25T7 FD20W7 FD25W7

Item No	Part No.	Mark	Description		Req'd	Remarks : Serial No.
1	241G2-22201		PUMP,FUEL	ﾎﾟﾝﾌﾟ	1	A
2	241G2-22211		FILTER,FUEL	ﾌｨﾙﾀ	1	A
3	01183-08016		BOLT	ﾎﾞﾙﾄ	2	A
4	21322-22011		HOSE,FUEL,7.5X250	ﾎｰｽ	2	A
-	242F2-22001		HOSE,FUEL,7.5X700	ﾎｰｽ	1	B
5	24662-22141		HOSE,FUEL,6.5X380	ﾎｰｽ	1	A
-	23322-22011		HOSE,FUEL,6.5X330	ﾎｰｽ	1	B
6	24662-22131		HOSE,FUEL,7.5X270	ﾎｰｽ	1	A
7	22192-22091		CLIP	ｸﾘｯﾌﾟ	8	A
-	22192-22091		CLIP	ｸﾘｯﾌﾟ	4	B
8	26602-42081		CLIP	ｸﾘｯﾌﾟ	1	B
9	241G2-22151		BRACKET,FUEL-FILTER	ﾌﾞﾗｹｯﾄ	1	A
10	241G2-22031		BRACKET,FUEL-PUMP	ﾌﾞﾗｹｯﾄ	1	A
11	01186-08025		BOLT	ﾎﾞﾙﾄ	4	A
12	01186-06020		BOLT	ﾎﾞﾙﾄ	2	A

FIG.18 EXHAUST SYSTEM

(F6022320) エキゾーストシステム

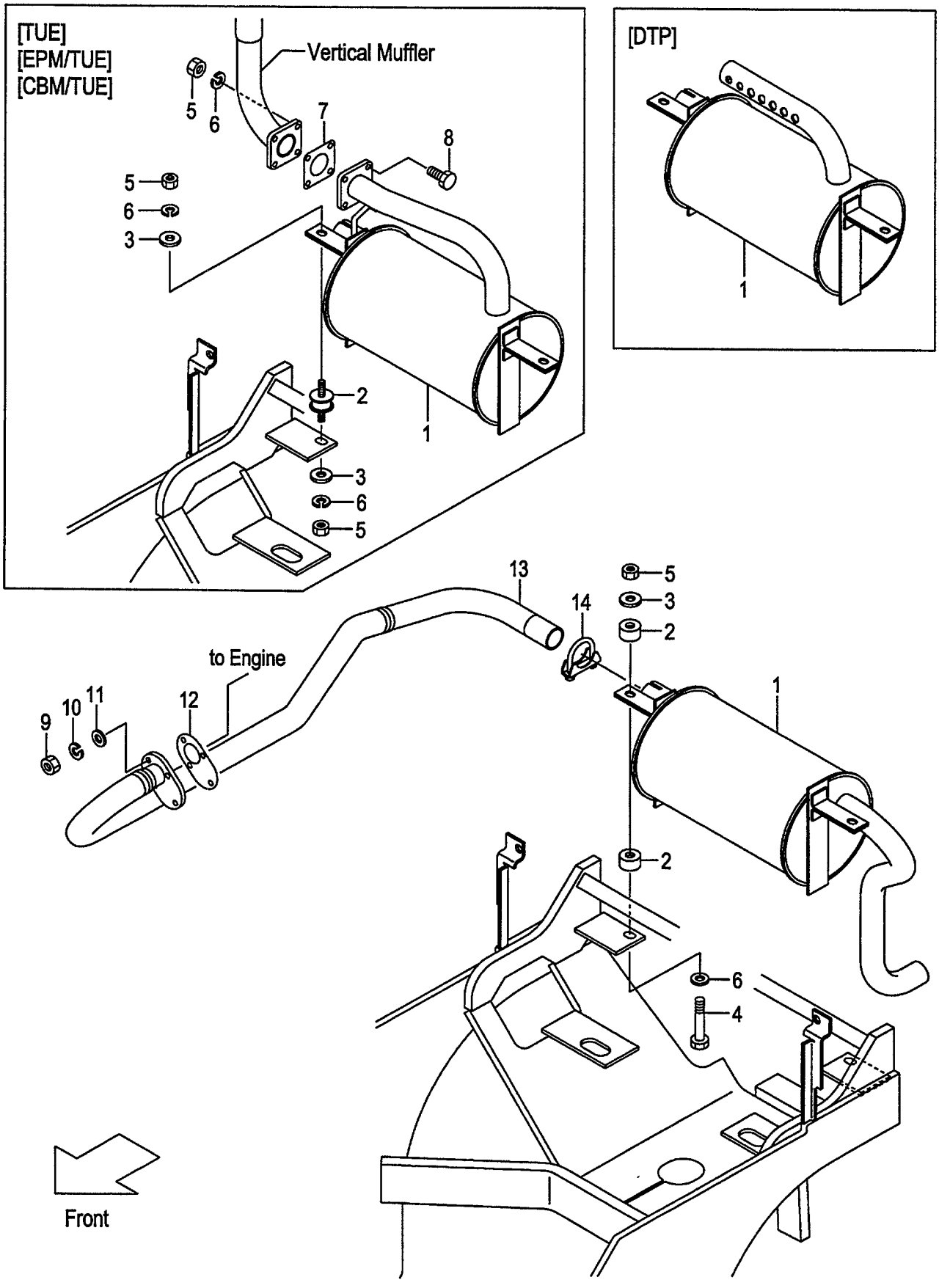

A:FD20C18 FD20T18 FD25C18 FD25T18

Item No	Part No.	Mark	Description		Req'd	Remarks : Serial No.
1	242E2-30201		MUFFLER	ﾏﾌﾗ	1	
-	542E0-80101		MUFFLER	ﾏﾌﾗ	1	[TUE]
-	542E1-70101		MUFFLER	ﾏﾌﾗ	1	[EPM]
-	542E0-80201		MUFFLER	ﾏﾌﾗ	1	[EPM/TUE]
-	542E1-70201		MUFFLER	ﾏﾌﾗ	1	[CBM]
-	542E0-80301		MUFFLER	ﾏﾌﾗ	1	[CBM/TUE]
-	542E1-70301		MUFFLER	ﾏﾌﾗ	1	[DTP]
2	22252-32241		RUBBER	ﾗﾊﾞｰ	4	
-	539A0-82201		RUBBER	ﾗﾊﾞｰ	2	[TUE][EPM/TUE][CBM/TUE]
3	22252-32251		WASHER	ﾜｯｼｬ	2	
-	124T3-43041		PLATE	ﾌﾟﾚｰﾄ	4	[TUE][EPM/TUE][CBM/TUE]
4	21232-32551		BOLT	ﾎﾞﾙﾄ	2	(WITHOUT TUE,EPM/TUE,CBM/TUE)
5	23652-12051		NUT	ﾅｯﾄ	2	
-	01400-00008		NUT	ﾅｯﾄ	8	[TUE][EPM/TUE][CBM/TUE]
6	02000-00010		WASHER	ﾜｯｼｬ	2	
-	02010-00008		WASHER	ﾜｯｼｬ	8	[TUE][EPM/TUE][CBM/TUE]
7	217G2-32001		GASKET	ｶﾞｽｹｯﾄ	1	[TUE][EPM/TUE][CBM/TUE]
8	01182-08025		BOLT	ﾎﾞﾙﾄ	4	[TUE][EPM/TUE][CBM/TUE]
9	01400-20008		NUT	ﾅｯﾄ	2	
10	02010-00008		WASHER	ﾜｯｼｬ	2	
11	02000-00008		WASHER	ﾜｯｼｬ	2	
12	242E2-32001		GASKET	ｶﾞｽｹｯﾄ	1	
13	242E2-32101		TUBE,FRONT	ﾁｭｰﾌﾞ	1	
14	234A2-30501		CLAMP,U-BOLT	ｸﾗﾝﾌﾟ	1	

FIG.19 EXHAUST SYSTEM

(F6022330) エキゾーストシステム

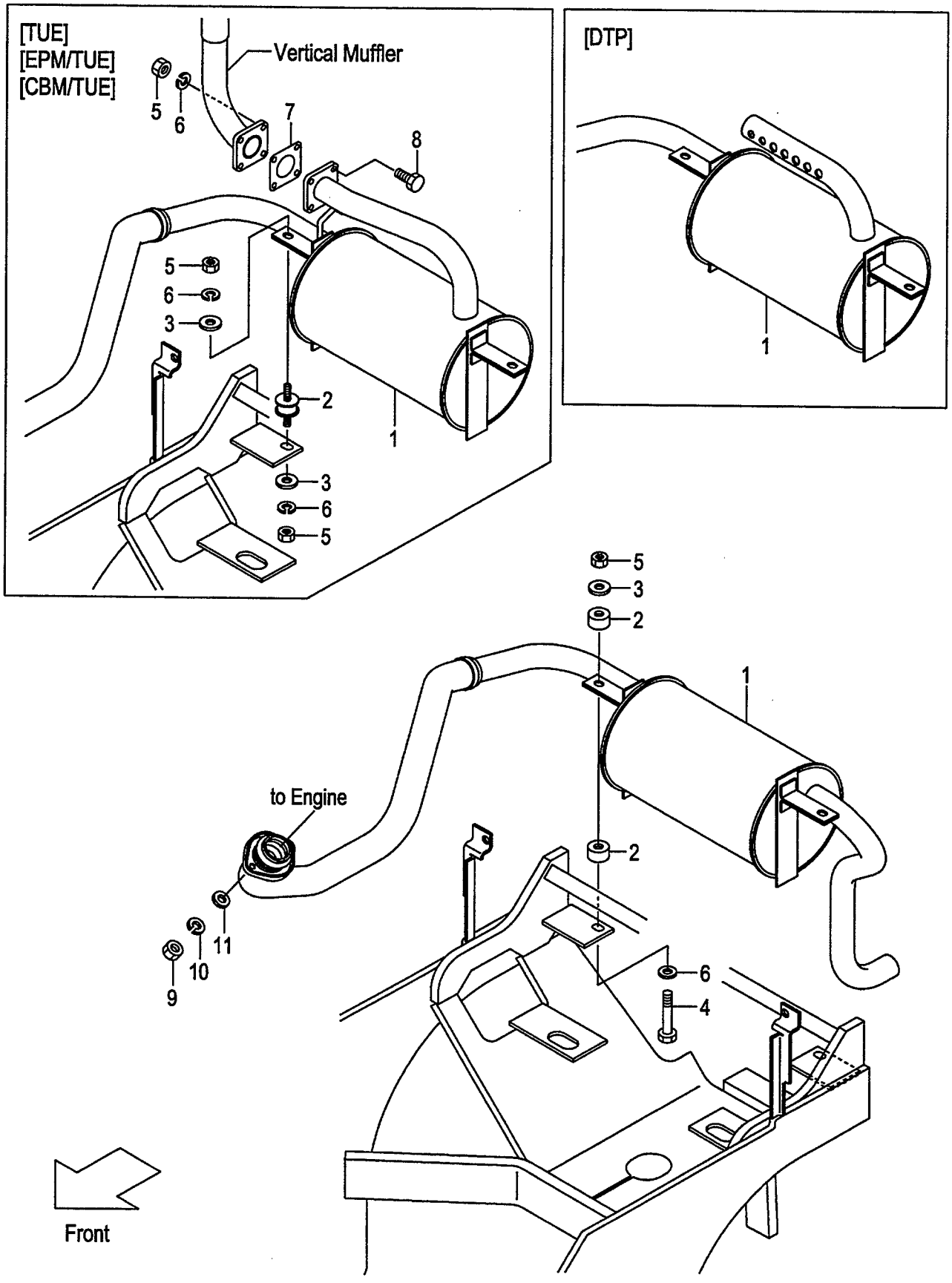

FIG.19
(F6022330)

A:FD20C7 FD20T7 FD25C7 FD25T7 FD20W7 FD25W7

Item No	Part No.	Mark	Description		Req'd	Remarks : Serial No.
1	242F2-30101		MUFFLER	ﾏﾌﾗ	1	
-	542F0-80101		MUFFLER	ﾏﾌﾗ	1	[TUE]
-	542F1-70101		MUFFLER	ﾏﾌﾗ	1	[EPM]
-	542F0-80201		MUFFLER	ﾏﾌﾗ	1	[EPM/TUE]
-	542F1-70201		MUFFLER	ﾏﾌﾗ	1	[CBM]
-	542F0-80301		MUFFLER	ﾏﾌﾗ	1	[CBM/TUE]
-	542F1-70301		MUFFLER	ﾏﾌﾗ	1	[DTP]
2	22252-32241		RUBBER	ﾗﾊﾞｰ	4	
-	539A0-82201		RUBBER	ﾗﾊﾞｰ	2	[TUE][EPM/TUE][CBM/TUE]
3	22252-32251		WASHER	ﾜｯｼｬ	2	
-	124T3-43041		PLATE	ﾌﾟﾚｰﾄ	4	[TUE][EPM/TUE][CBM/TUE]
4	21232-32551		BOLT	ﾎﾞﾙﾄ	2	(WITHOUT TUE,EPM/TUE,CBM/TUE)
5	23652-12051		NUT	ﾅｯﾄ	2	
-	01400-00008		NUT	ﾅｯﾄ	8	[TUE][EPM/TUE][CBM/TUE]
6	02000-00010		WASHER	ﾜｯｼｬ	2	
-	02010-00008		WASHER	ﾜｯｼｬ	8	[TUE][EPM/TUE][CBM/TUE]
7	217G2-32001		GASKET	ｶﾞｽｹｯﾄ	1	[TUE][EPM/TUE][CBM/TUE]
8	01182-08025		BOLT	ﾎﾞﾙﾄ	4	[TUE][EPM/TUE][CBM/TUE]
9	01400-20008		NUT	ﾅｯﾄ	2	
10	02010-00008		WASHER	ﾜｯｼｬ	2	
11	02000-00008		WASHER	ﾜｯｼｬ	2	

FIG.20 EXHAUST SYSTEM [DPF]

(F6022340) エキゾーストシステム

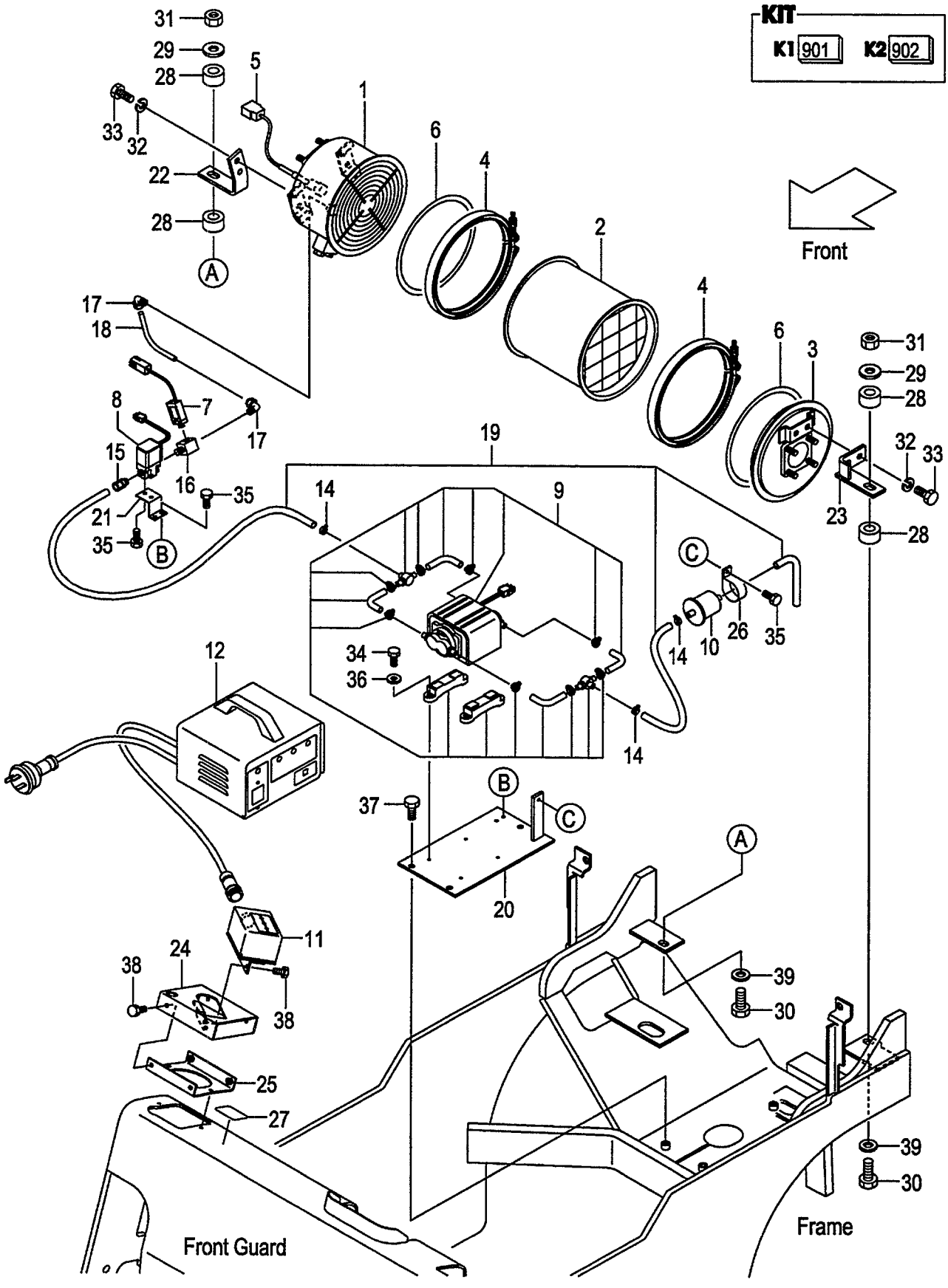

FIG.20
(F6022340)

A:FD20C7 FD20T7 FD25C7 FD25T7 FD20W7 FD25W7

Item No	Part No.	Mark	Description		Req'd	Remarks : Serial No.
901	509P5-90101	K1	KIT,DPF-MUFFLER	ﾏﾌﾗｷｯﾄ	1	[DPF] INC.1-15
902	509P5-92511	K2	KIT,PIPING	ﾊﾟｲﾋﾟﾝｸﾞｷｯﾄ	1	[DPF] INC.14,15
A1	509P5-92001	*	MUFFLER-ASSY,DPF	ﾏﾌﾗｱｯｾﾝ	1	[DPF] INC.1-6
1	509P5-92011	*	UNIT,INLET	ﾕﾆｯﾄ	1	[DPF]
2	509P5-92021	*	UNIT,FILTER	ﾕﾆｯﾄ	1	[DPF]
3	509P5-92031	*	UNIT,OUTLET	ﾕﾆｯﾄ	1	[DPF]
4	509P5-92041	*	V-BAND	Vﾊﾞﾝﾄﾞ	2	[DPF]
5	509P5-92051	*	SENSOR,TEMP	ｾﾝｻ	1	[DPF]
6	509P5-92061	*	GASKET	ｶﾞｽｹｯﾄ	2	[DPF]
7	509P5-92071	*	SENSOR,PRESS	ｾﾝｻ	1	[DPF]
8	509P5-92081	*	VALVE,SOLENOIDE	ﾊﾞﾙﾌﾞ	1	[DPF]
9	509P5-92091	*	PUMP,AIR	ﾎﾟﾝﾌﾟ	1	[DPF]
10	509P5-92101	*	FILTER,AIR	ﾌｨﾙﾀ	1	[DPF]
11	509P5-92111	*	UNIT,MONITOR	ﾕﾆｯﾄ	1	[DPF]
12	509P5-92121	*	UNIT,CONTROLLER	ﾕﾆｯﾄ	1	[DPF]
13	509P5-92241	*+	KIT,CONNECTOR	ｺﾈｸﾀｷｯﾄ	1	[DPF]
14	NO PART NO.	*#	CLIP	ｸﾘｯﾌﾟ	3	[DPF]
15	NO PART NO.	*#	NIPPLE	ﾆｯﾌﾟﾙ	1	[DPF]
16	509P5-92181		THREE-WAY	ｽﾘｰｳｴｲ	1	[DPF]
17	509P5-92201		ELBOW	ｴﾙﾎﾞ	2	[DPF]
18	509P5-92211		PIPE,COPPER	ﾊﾟｲﾌﾟ	1	[DPF]
19	509P5-92231		HOSE	ﾎｰｽ	1	[DPF]
20	539A5-92261		BRACKET,PUMP	ﾌﾞﾗｹｯﾄ	1	[DPF]
21	539A5-92251		BRACKET,VALVE	ﾌﾞﾗｹｯﾄ	1	[DPF]
22	539A5-92131		BRACKET,MUFFLER,RH	ﾌﾞﾗｹｯﾄ	1	[DPF]
23	539A5-92141		BRACKET,MUFFLER,LH	ﾌﾞﾗｹｯﾄ	1	[DPF]
24	539A5-92371		BRACKET,MONITOR	ﾌﾞﾗｹｯﾄ	1	[DPF]
25	516G1-42021		BRACKET	ﾌﾞﾗｹｯﾄ	1	[DPF]
26	509P5-92491		BAND	ﾊﾞﾝﾄﾞ	1	[DPF]
27	509P5-92521		DECAL,DPF-CAUTION	ﾃﾞｶﾙ	1	[DPF]
28	22252-32241		RUBBER	ﾗﾊﾞｰ	4	[DPF]
29	22252-32251		WASHER	ﾜｯｼｬ	2	[DPF]
30	21232-32551		BOLT	ﾎﾞﾙﾄ	2	[DPF]
31	23652-12051		NUT	ﾅｯﾄ	2	[DPF]
32	02013-00008		WASHER	ﾜｯｼｬ	4	[DPF]
33	01109-08020		BOLT	ﾎﾞﾙﾄ	4	[DPF]
34	01170-04012		BOLT	ﾎﾞﾙﾄ	4	[DPF]
35	01183-05010		BOLT	ﾎﾞﾙﾄ	5	[DPF]
36	02000-00004		WASHER	ﾜｯｼｬ	4	[DPF]
37	01185-08016		BOLT	ﾎﾞﾙﾄ	3	[DPF]
38	01185-06012		BOLT	ﾎﾞﾙﾄ	6	[DPF]
39	02000-00010		WASHER	ﾜｯｼｬ	2	[DPF]

FIG.21 POST & TAIL [TUE]

(F6022350) ﾎﾟｽﾄ&ﾃｲﾙ

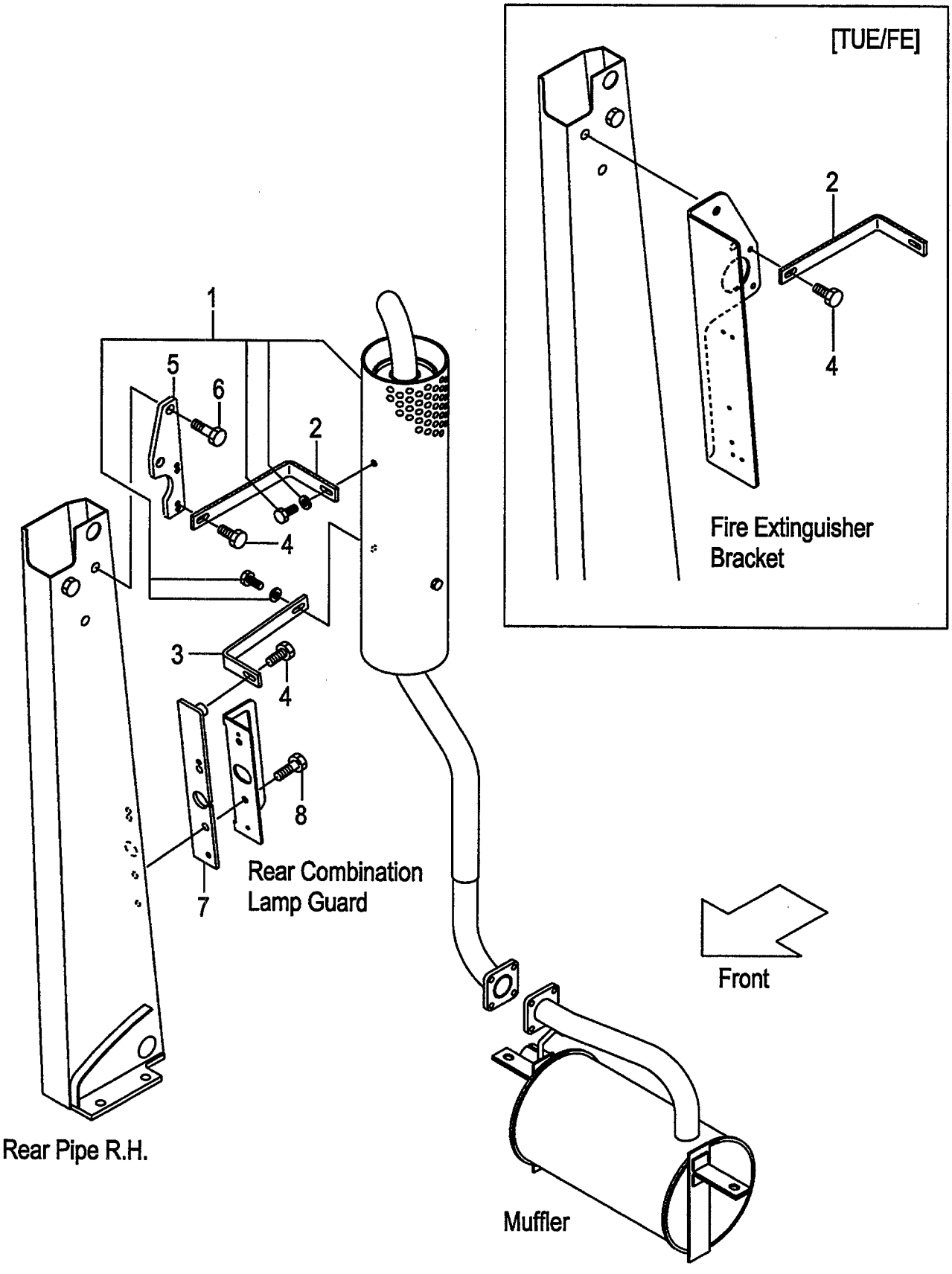

FIG.21
(F6022350)

A:FD20C18 FD20T18 FD25C18 FD25T18

Item No	Part No.	Mark	Description		Req'd	Remarks : Serial No.
1	537A0-80302		MUFFLER,VERTICAL	ﾏﾌﾗ	1	[TUE]
2	537A0-82001		STAY	ｽﾃｰ	1	[TUE]
3	537A0-82011		STAY	ｽﾃｰ	1	[TUE]
4	01185-08016		BOLT	ﾎﾞﾙﾄ	2	[TUE]
5	510F0-82032		BRACKET,STAY	ﾌﾞﾗｹｯﾄ	1	[TUE](WITHOUT TUE/FE)
6	01186-12045		BOLT	ﾎﾞﾙﾄ	2	[TUE](WITHOUT TUE/FE)
7	534A0-82101		BRACKET,STAY	ﾌﾞﾗｹｯﾄ	1	[TUE]
8	01183-08022		BOLT	ﾎﾞﾙﾄ	2	[TUE]

FIG.22 POST & TAIL [TUE]

(F6022360) ﾎﾟｽﾄ&ﾃｲﾙ

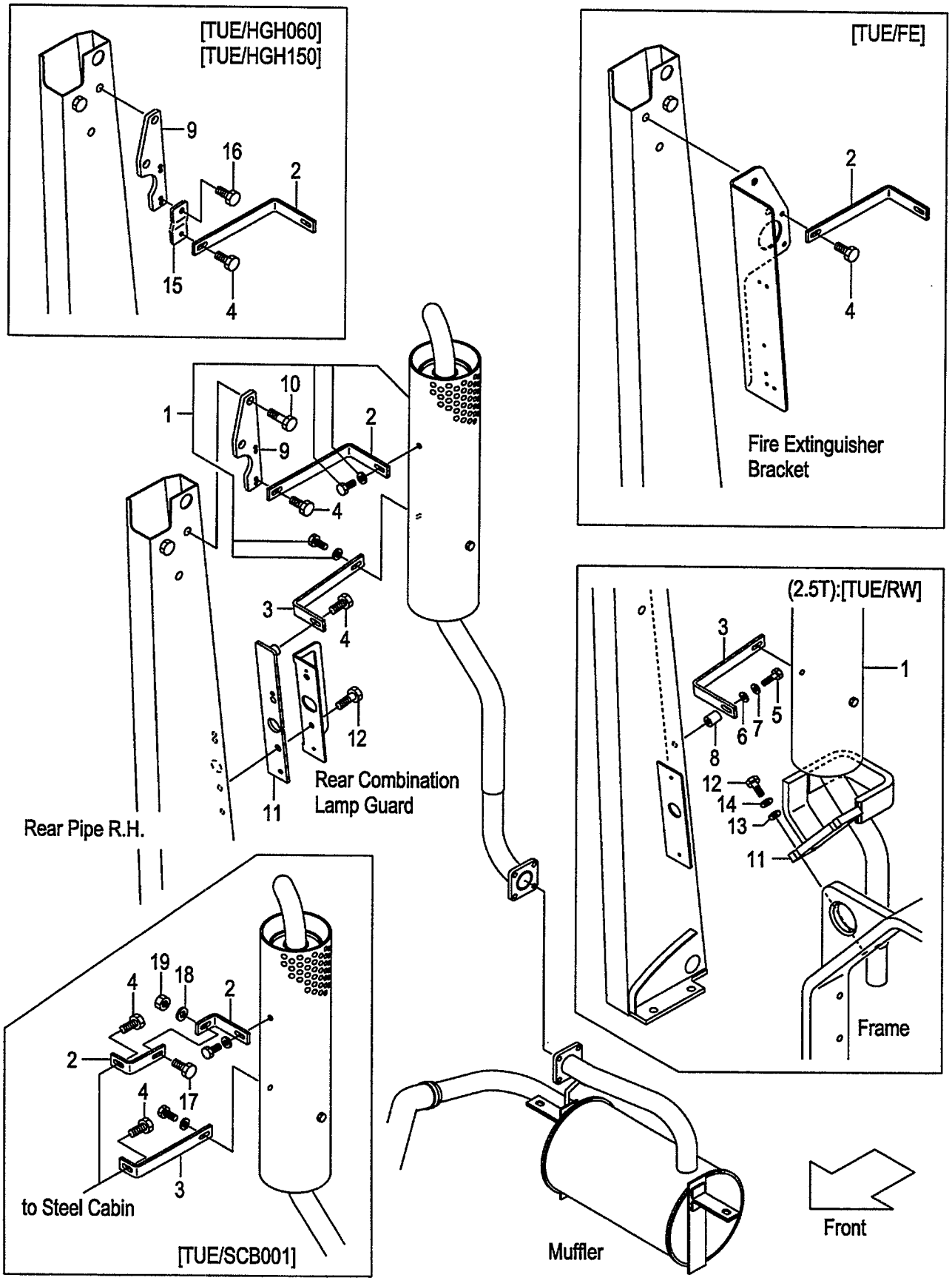

A:FD20C7 FD20T7 C:FD20W7
B:FD25C7 FD25T7 D:FD25W7

FIG.22
(F6022360)

Item No	Part No.	Mark	Description		Req'd	Remarks : Serial No.
1	537A0-80302		MUFFLER,VERTICAL	ﾏﾌﾗ	1	[TUE]
-	539C1-90502		MUFFLER,VERTICAL	ﾏﾌﾗ	1	B,D [TUE/RW]
2	537A0-82001		STAY	ｽﾃｰ	1	[TUE]
-	524W3-92211		STAY	ｽﾃｰ	2	[TUE/SCB001]
-	539C1-90521		STAY	ｽﾃｰ	1	B,D [TUE/RW]
3	537A0-82011		STAY	ｽﾃｰ	1	[TUE]
-	514A0-82022		STAY	ｽﾃｰ	1	[TUE/SCB001]
-	514A0-82081		STAY	ｽﾃｰ	1	B,D [TUE/RW]
4	01185-08016		BOLT	ﾎﾞﾙﾄ	2	[TUE]
-	01185-08016		BOLT	ﾎﾞﾙﾄ	1	B,D [TUE/RW]
5	01100-08045		BOLT	ﾎﾞﾙﾄ	1	B,D [TUE/RW]
6	02000-00008		WASHER	ﾜｯｼｬ	1	B,D [TUE/RW]
7	02010-00008		WASHER	ﾜｯｼｬ	1	B,D [TUE/RW]
8	516G2-72071		SPACER	ｽﾍﾟｰｻ	1	B,D [TUE/RW]
9	510F0-82032		BRACKET,STAY	ﾌﾞﾗｹｯﾄ	1	[TUE](WITHOUT TUE/FE)
10	01186-12045		BOLT	ﾎﾞﾙﾄ	2	[TUE](WITHOUT TUE/FE)
11	534A0-82101		BRACKET,STAY	ﾌﾞﾗｹｯﾄ	1	[TUE]
-	539C1-92501		GUARD	ｶﾞｰﾄﾞ	1	B,D [TUE/RW]
12	01183-08022		BOLT	ﾎﾞﾙﾄ	2	[TUE]
-	01100-12045		BOLT	ﾎﾞﾙﾄ	4	B,D [TUE/RW]
13	02000-00012		WASHER	ﾜｯｼｬ	4	B,D [TUE/RW]
14	02010-00012		WASHER	ﾜｯｼｬ	4	B,D [TUE/RW]
15	514A0-82251		BRACKET,STAY	ﾌﾞﾗｹｯﾄ	1	[TUE/HGH060]
-	529F0-82101		BRACKET,STAY	ﾌﾞﾗｹｯﾄ	1	[TUE/HGH150]
16	01183-08016		BOLT	ﾎﾞﾙﾄ	1	[TUE/HGH060][TUE/HGH150]
17	01185-08030		BOLT	ﾎﾞﾙﾄ	1	[TUE/SCB001]
18	02000-00008		WASHER	ﾜｯｼｬ	1	[TUE/SCB001]
19	01400-00008		NUT	ﾅｯﾄ	1	[TUE/SCB001]

FIG.23 POST & TAIL [TUE/(EXB,EXC,EXE,EXK,EXN)]

(F6022370) ﾎﾟｽﾄ&ﾃｲﾙ

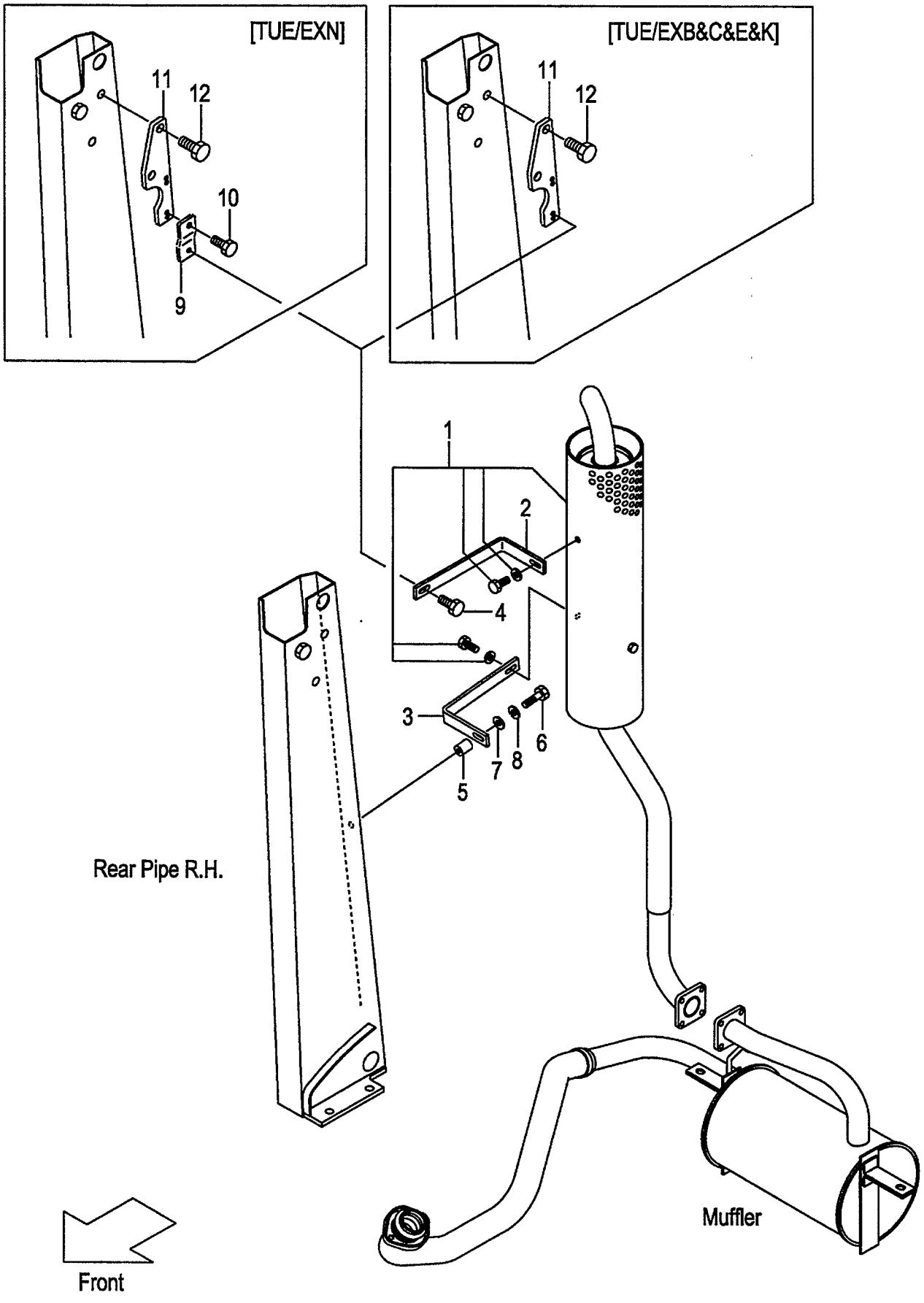

FIG.23
(F6022370)

A:FD20C7 FD20T7 FD25C7 FD25T7

Item No	Part No.	Mark	Description		Req'd	Remarks : Serial No.
1	537A0-80302		MUFFLER,VERTICAL	ﾏﾌﾗ	1	[TUE/EXB&C&E&K&N]
2	537A0-82001		STAY	ｽﾃｰ	1	[TUE/EXB&C&E&K&N]
3	537A0-82011		STAY	ｽﾃｰ	1	[TUE/EXB&C&E&K&N]
4	01185-08016		BOLT	ﾎﾞﾙﾄ	1	[TUE/EXB&C&E&K&N]
5	516G2-72071		SPACER	ｽﾍﾟｰｻ	1	[TUE/EXB&C&E&K&N]
6	01100-08045		BOLT	ﾎﾞﾙﾄ	1	[TUE/EXB&C&E&K&N]
7	02000-00008		WASHER	ﾜｯｼｬ	1	[TUE/EXB&C&E&K&N]
8	02010-00008		WASHER	ﾜｯｼｬ	1	[TUE/EXB&C&E&K&N]
9	514A0-82251		BRACKET,STAY	ﾌﾞﾗｹｯﾄ	1	[TUE/EXN]
10	01183-08016		BOLT	ﾎﾞﾙﾄ	1	[TUE/EXN]
11	510F0-82032		BRACKET,STAY	ﾌﾞﾗｹｯﾄ	1	[TUE/EXB&C&E&K&N]
12	01186-12045		BOLT	ﾎﾞﾙﾄ	2	[TUE/EXB&C&E&K&N]

FIG.24 WIRE HARNESS [DPF]

(F6022380) ワイヤハーネス

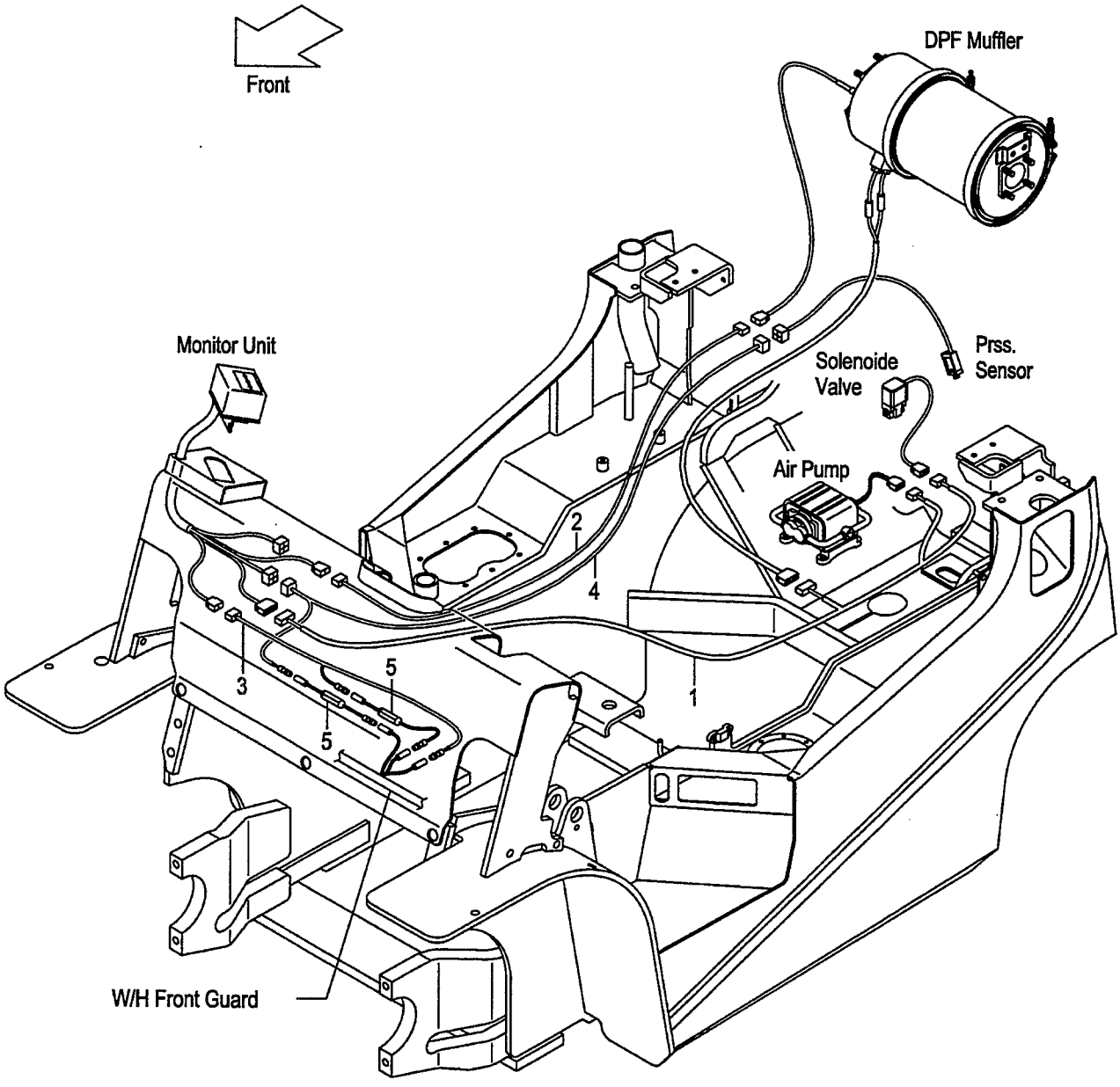

FIG.24
(F6022380)

A:FD20C7 FD20T7 FD25C7 FD25T7 FD20W7 FD25W7

Item No	Part No.	Mark	Description	Req'd	Remarks : Serial No.
1	539A5-92441		WIRE-HARNESS ﾜｲﾔﾊｰﾈｽ	1	[DPF] (MONITOR-HEATER&PUMP&VALVE)
2	509P5-92451		WIRE-HARNESS ﾜｲﾔﾊｰﾈｽ	1	[DPF](MONITOR-TEMP SENSOR)
3	509M5-92381		WIRE-HARNESS ﾜｲﾔﾊｰﾈｽ	1	[DPF](MONITOR-OPT TERMINAL)
4	509P5-92471		WIRE-HARNESS ﾜｲﾔﾊｰﾈｽ	1	[DPF] (MONITOR-PRESSURE SENSOR)
5	509P5-92481		WIRE-HARNESS ﾜｲﾔﾊｰﾈｽ	2	[DPF](FUSE BOX)

FIG.25 FRONT TUBE & JOINT [DPF]

(F6022390) フロントチューブ&ジョイント

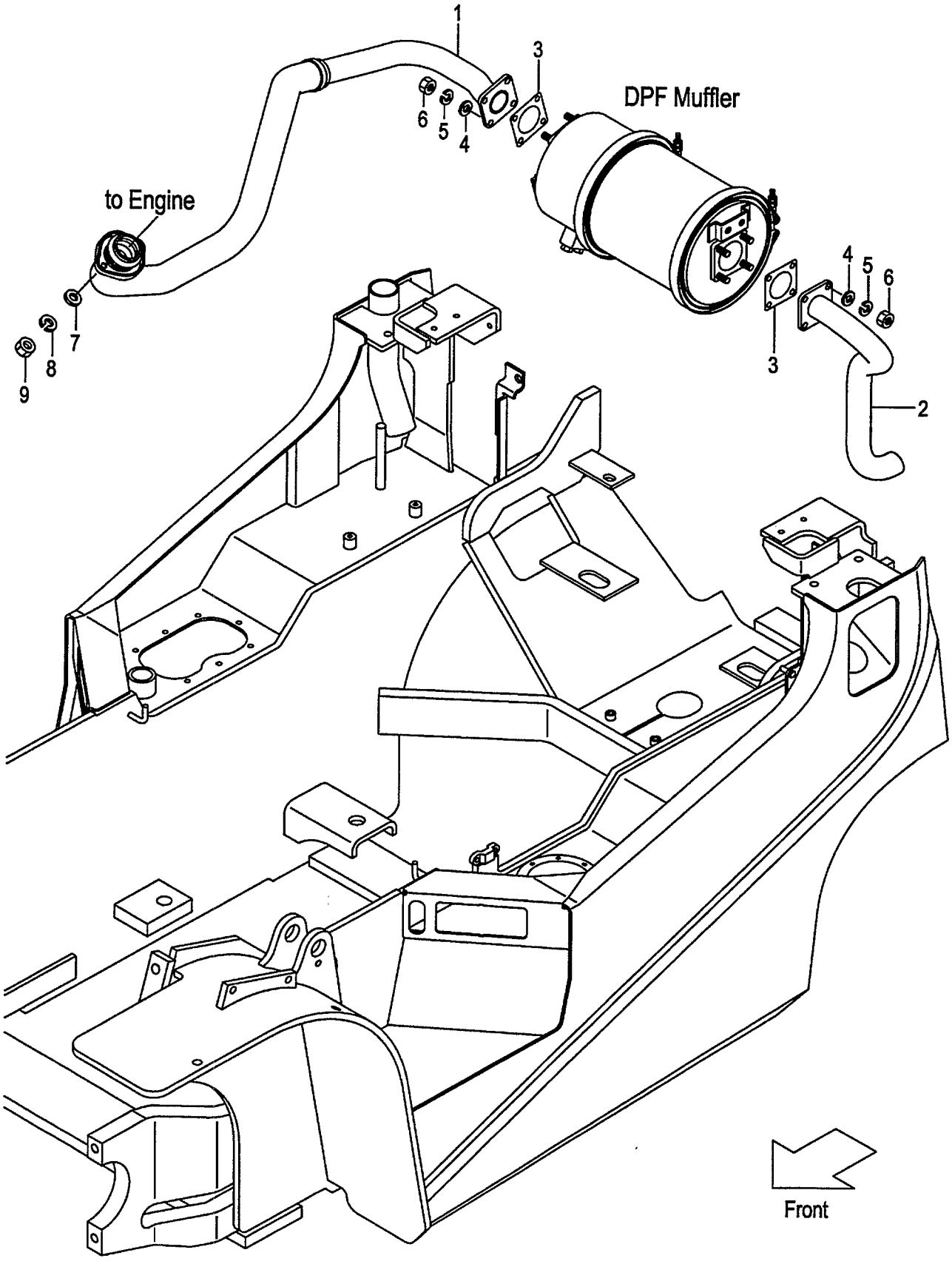

FIG.25
(F6022390)

A:FD20C7 FD20T7 FD25C7 FD25T7 FD20W7 FD25W7

Item No	Part No.	Mark	Description		Req'd	Remarks : Serial No.
1	542F5-92001		TUBE,FRONT	ﾁｭｰﾌﾞ	1	[DPF]
2	539A5-92341		TUBE,TAIL	ﾁｭｰﾌﾞ	1	[DPF]
3	509P5-92351		GASKET	ｶﾞｽｹｯﾄ	2	[DPF]
4	02001-00008		WASHER	ﾜｯｼｬ	8	[DPF]
5	02013-00008		WASHER	ﾜｯｼｬ	8	[DPF]
6	01400-30008		NUT	ﾅｯﾄ	8	[DPF]
7	02000-00008		WASHER	ﾜｯｼｬ	4	[DPF]
8	02010-00008		WASHER	ﾜｯｼｬ	4	[DPF]
9	01400-20008		NUT	ﾅｯﾄ	4	[DPF]

FIG.26 COMBINATION METER

(F6022420) コンビネーションメータ

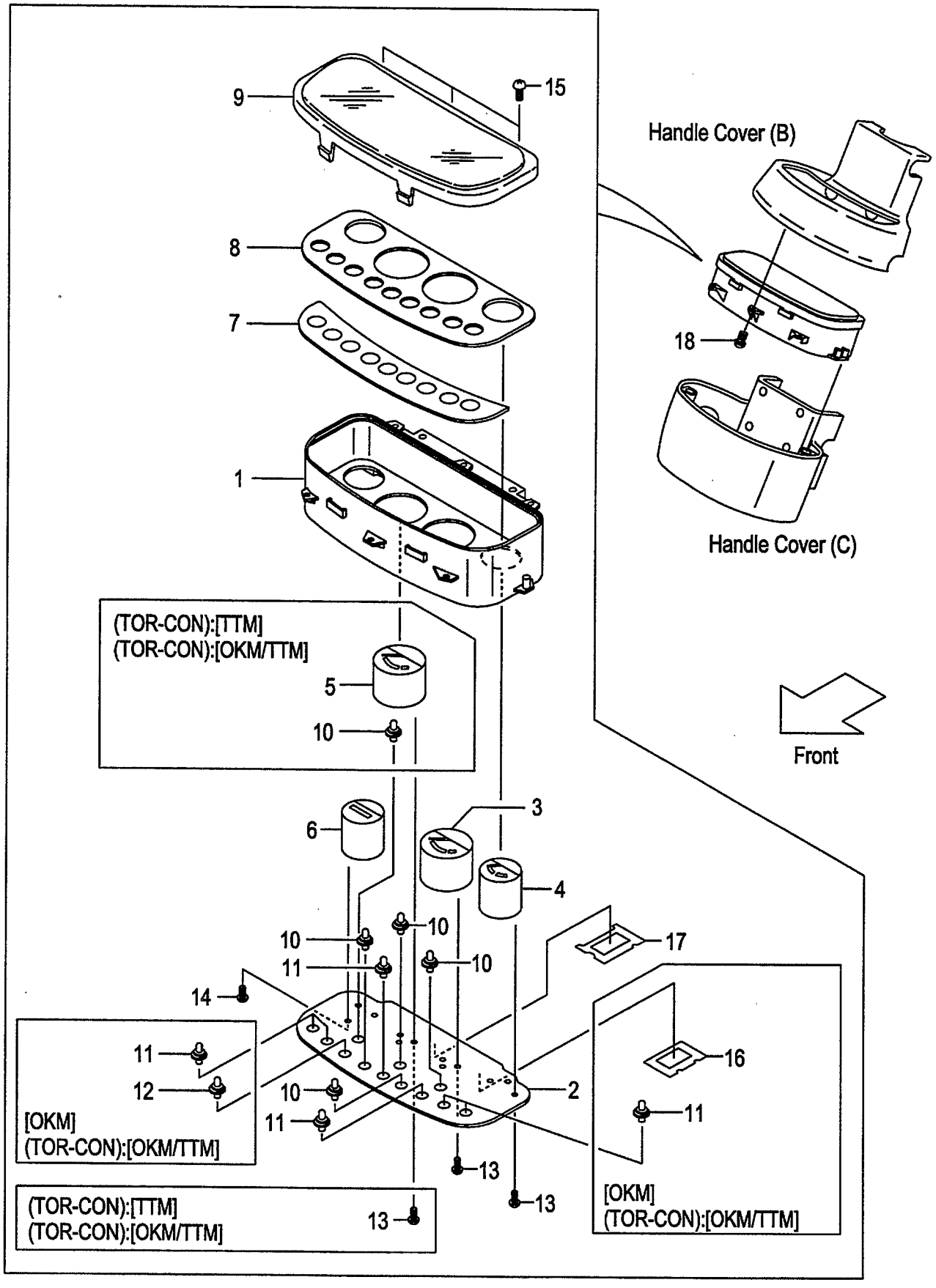

A:FD20C18 FD25C18 D:FD20T7 FD25T7
B:FD20T18 FD25T18 E:FD20W7 FD25W7
C:FD20C7 FD25C7

FIG.26
(F6022420)

Item No	Part No.	Mark	Description		Req'd	Remarks : Serial No.
A1	217G2-40301		METER-ASSY,COMBINATION		1	INC.1-4,6-11,13-15,17
				ｺﾝﾋﾞﾈｰｼｮﾝﾒｰﾀｱｯｾﾝ		
-	517G6-20101		METER-ASSY,COMBINATION		1	[OKM] INC.1-4,6-17
				ｺﾝﾋﾞﾈｰｼｮﾝﾒｰﾀｱｯｾﾝ		
-	517H8-80101		METER-ASSY,COMBINATION		1	B,D
				ｺﾝﾋﾞﾈｰｼｮﾝﾒｰﾀｱｯｾﾝ		[TTM] INC.1-11,13-15,17
-	517G6-20201		METER-ASSY,COMBINATION		1	B,D
				ｺﾝﾋﾞﾈｰｼｮﾝﾒｰﾀｱｯｾﾝ		[OKM/TTM] INC.1-17
1	216G2-43201		HOUSING	ﾊｳｼﾞﾝｸﾞ	1	
2	216G2-43221		CIRCUIT,PRINTED	ｻｰｷｯﾄ	1	
-	516G6-22051		CIRCUIT,PRINTED	ｻｰｷｯﾄ	1	[OKM]
-	516G6-22051		CIRCUIT,PRINTED	ｻｰｷｯﾄ	1	B,D
						[OKM/TTM]
3	216G2-43231		GAUGE,WATER-TEMP	ｹﾞｰｼﾞ	1	
4	216G2-43241		GAUGE,FUEL	ｹﾞｰｼﾞ	1	
5	216G2-43251		GAUGE,OIL-TEMP	ｹﾞｰｼﾞ	1	B,D
						[TTM][OKM/TTM]
6	216G2-43261		METER,HOUR	ﾒｰﾀ	1	
7	216G2-43271		LENS,WARNING	ﾚﾝｽﾞ	1	
8	216G2-43281		PLATE,SHADOW	ﾌﾟﾚｰﾄ	1	
-	216G2-43291		PLATE,SHADOW	ﾌﾟﾚｰﾄ	1	B,D
						[TTM][OKM/TTM]
9	216G2-43301		COVER,FRONT	ｶﾊﾞｰ	1	
10	222A2-42331		SOCKET & BULB	ｿｹｯﾄ&ﾊﾞﾙﾌﾞ	4	(14V/1.4W)
-	222A2-42331		SOCKET & BULB	ｿｹｯﾄ&ﾊﾞﾙﾌﾞ	5	B,D
						[TTM][OKM/TTM](14V/1.4W)
11	222A2-42401		SOCKET & BULB	ｿｹｯﾄ&ﾊﾞﾙﾌﾞ	2	(13.5V/2W)
-	222A2-42401		SOCKET & BULB	ｿｹｯﾄ&ﾊﾞﾙﾌﾞ	6	[OKM](13.5V/2W)
-	222A2-42401		SOCKET & BULB	ｿｹｯﾄ&ﾊﾞﾙﾌﾞ	6	B,D
						[OKM/TTM](13.5V/2W)
12	222A2-42341		SOCKET & BULB	ｿｹｯﾄ&ﾊﾞﾙﾌﾞ	1	[OKM](14V/3W)
-	222A2-42341		SOCKET & BULB	ｿｹｯﾄ&ﾊﾞﾙﾌﾞ	1	B,D
						[OKM/TTM](14V/3W)
13	229F2-42421		SCREW	ｽｸﾘｭ	6	
-	229F2-42421		SCREW	ｽｸﾘｭ	9	B,D
						[TTM][OKM/TTM]
14	229F2-42431		SCREW	ｽｸﾘｭ	3	
15	222A2-42361		SCREW	ｽｸﾘｭ	3	
16	516G6-22031		GASKET	ｶﾞｽｹｯﾄ	1	[OKM]
-	516G6-22031		GASKET	ｶﾞｽｹｯﾄ	1	B,D
						[OKM/TTM]
17	216G2-43161		GASKET	ｶﾞｽｹｯﾄ	1	
18	222A2-42031		SCREW	ｽｸﾘｭ	5	

FIG.27 STEERING SHAFT COVER (CLUTCH)(OIL CLUTCH)

(F6022430) ステアリングシャフトカバー

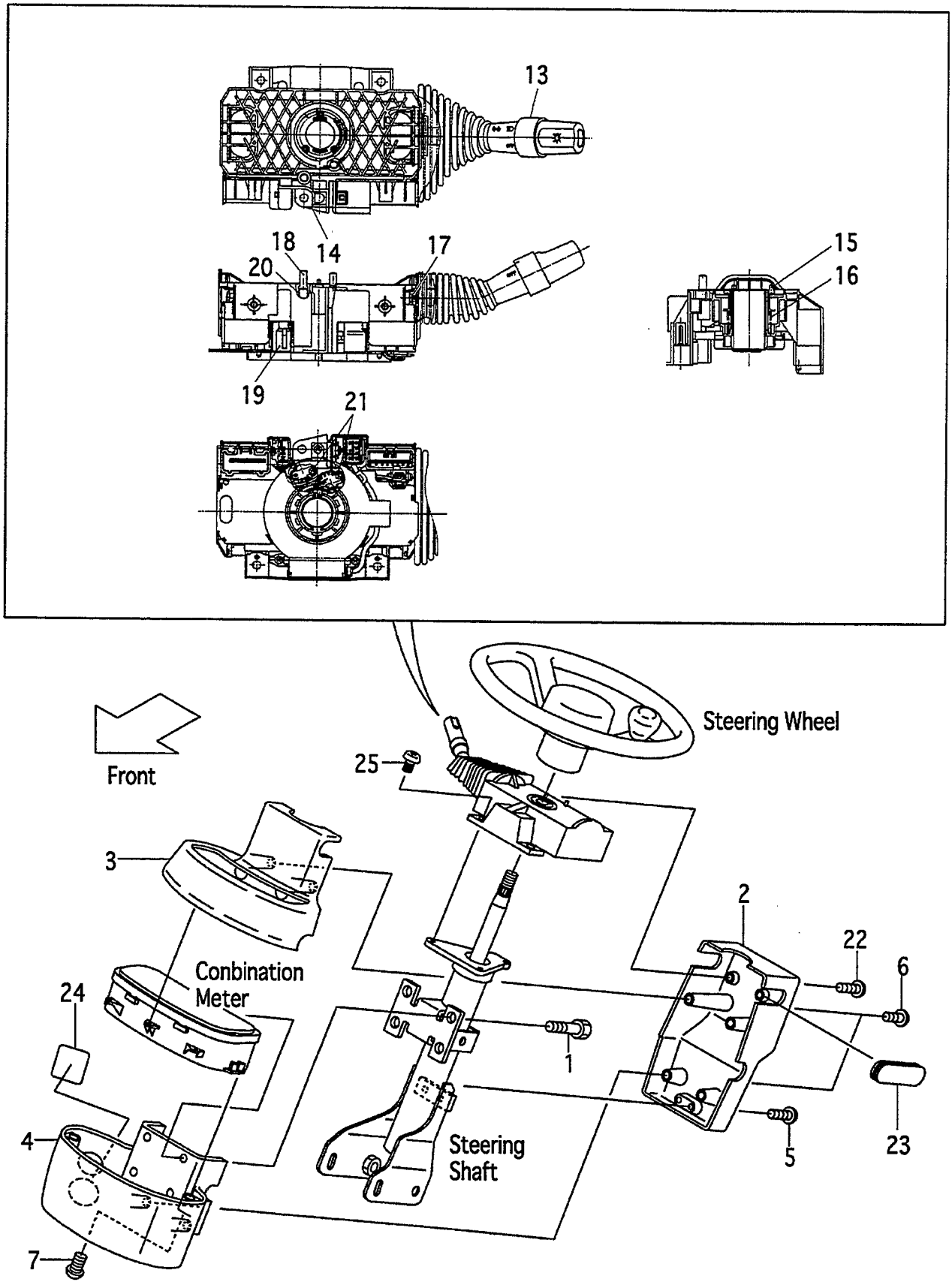

A:FD20C18 FD25C18 D:FD20W7
B:FD20C7 E:FD25W7
C:FD25C7

FIG.27
(F6022430)

Item No	Part No.	Mark	Description		Req'd	Remarks : Serial No.
1	01185-06016		BOLT	ﾎﾞﾙﾄ	4	
2	239A4-12501		COVER,HANDLE,A	ｶﾊﾞｰ	1	
3	239A4-12511		COVER,HANDLE,B	ｶﾊﾞｰ	1	
4	239A4-12521		COVER,HANDLE,C	ｶﾊﾞｰ	1	
-	539A7-72001		COVER,HANDLE,C	ｶﾊﾞｰ	1	[SWD]
5	214A6-42771		SCREW	ｽｸﾘｭ	2	
6	222A2-42031		SCREW	ｽｸﾘｭ	4	
7	216G4-12091		SCREW	ｽｸﾘｭ	2	
8	04913-11200	+	BAND	ﾊﾞﾝﾄﾞ	1	
9	216G2-42131	+	BAND	ﾊﾞﾝﾄﾞ	14	
10	04913-10100	+	BAND	ﾊﾞﾝﾄﾞ	6	
11	04913-11100	+	BAND	ﾊﾞﾝﾄﾞ	2	
12	04913-10200	+	BAND	ﾊﾞﾝﾄﾞ	2	
A1	239A2-40501		SWITCH-ASSY,COMBINATION	ｽｲｯﾁｱｯｾﾝ	1	INC.13-21
13	280C2-42331		SWITCH,TURN-SIGNAL	ｽｲｯﾁ	1	
14	NO PART NO.	#	BODY	ﾎﾞﾃﾞｨ	1	
15	NO PART NO.	#	CAM,CANCEL,RH	ｶﾑ	1	
16	NO PART NO.	#	SPRING	ｽﾌﾟﾘﾝｸﾞ	1	
17	NO PART NO.	#	SCREW	ｽｸﾘｭ	4	
18	280C2-42351		CONTACT,HORN	ｺﾝﾀｸﾄ	2	
19	NO PART NO.	#	CODE,CP-HORN	ｺｰﾄﾞ	1	
20	NO PART NO.	#	SPRING	ｽﾌﾟﾘﾝｸﾞ	2	
21	NO PART NO.	#	SCREW	ｽｸﾘｭ	2	
22	209K2-43001		SCREW	ｽｸﾘｭ	2	
23	239A4-12541		GROMMET,HANDLE-COVER	ｸﾞﾛﾒｯﾄ	1	
24	229F6-42201		SEAL,PANEL-COVER,A	ｼｰﾙ	1	
25	01033-05014		SCREW	ｽｸﾘｭ	3	

FIG.28 STEERING SHAFT COVER (TOR-CON)

(F6022440) ステアリング゛シャフトカバ゛ー

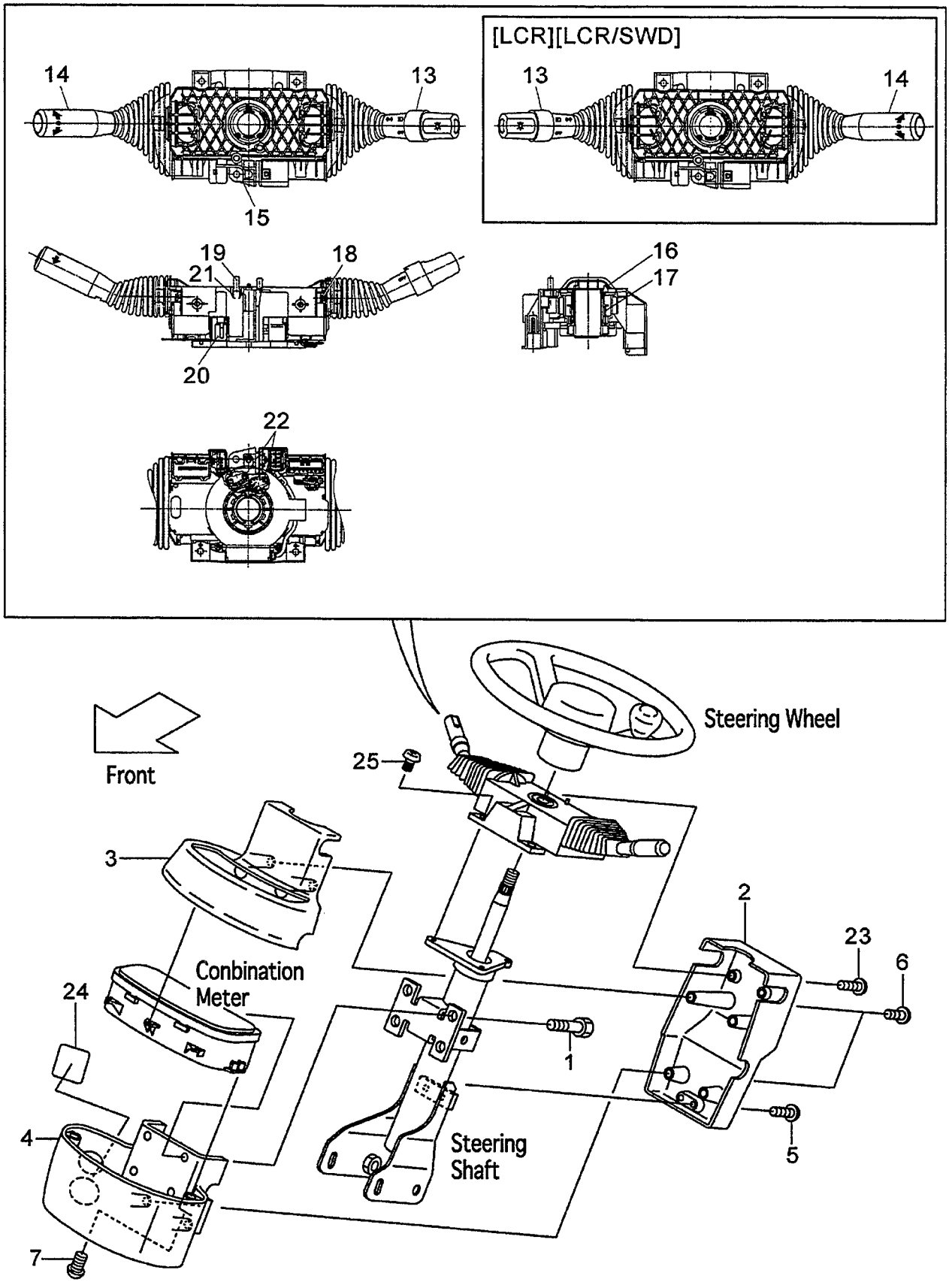

A:FD20T18 FD25T18
B:FD20T7
C:FD25T7

FIG.28
(F6022440)

Item No	Part No.	Mark	Description		Req'd	Remarks : Serial No.
1	01185-06016		BOLT	ﾎﾞﾙﾄ	4	
2	239A4-12501		COVER,HANDLE,A	ｶﾊﾞｰ	1	
3	239A4-12511		COVER,HANDLE,B	ｶﾊﾞｰ	1	
4	239A4-12521		COVER,HANDLE,C	ｶﾊﾞｰ	1	
-	539A7-72001		COVER,HANDLE,C	ｶﾊﾞｰ	1	[SWD][LCR/SWD]
5	214A6-42771		SCREW	ｽｸﾘｭ	2	
6	222A2-42031		SCREW	ｽｸﾘｭ	4	
7	216G4-12091		SCREW	ｽｸﾘｭ	2	
8	04913-11200	+	BAND	ﾊﾞﾝﾄﾞ	1	
9	216G2-42131	+	BAND	ﾊﾞﾝﾄﾞ	14	
10	04913-10100	+	BAND	ﾊﾞﾝﾄﾞ	6	
11	04913-11100	+	BAND	ﾊﾞﾝﾄﾞ	2	
12	04913-10200	+	BAND	ﾊﾞﾝﾄﾞ	2	
A1	209K2-40501		SWITCH-ASSY,COMBINATION	ｽｲｯﾁｱｯｾﾝ	1	INC.13-22
-	509K2-30101		SWITCH-ASSY,COMBINATION	ｽｲｯﾁｱｯｾﾝ	1	[LCR][LCR/SWD] INC.13-22
13	280C2-42331		SWITCH,TURN-SIGNAL	ｽｲｯﾁ	1	
-	280C2-42301		SWITCH,TURN-SIGNAL	ｽｲｯﾁ	1	[LCR][LCR/SWD]
14	280C2-42341		SWITCH,DIRECTION	ｽｲｯﾁ	1	
-	280C2-42311		SWITCH,DIRECTION	ｽｲｯﾁ	1	[LCR][LCR/SWD]
15	NO PART NO.	#	BODY	ﾎﾞﾃﾞｨ	1	
16	NO PART NO.	#	CAM,CANCEL,RH	ｶﾑ	1	
-	NO PART NO.	#	CAM,CANCEL,RH	ｶﾑ	1	[LCR][LCR/SWD]
17	NO PART NO.	#	SPRING	ｽﾌﾟﾘﾝｸﾞ	1	
18	NO PART NO.	#	SCREW	ｽｸﾘｭ	4	
19	280C2-42351		CONTACT,HORN	ｺﾝﾀｸﾄ	2	
20	NO PART NO.	#	CODE,CP-HORN	ｺｰﾄﾞ	1	
21	NO PART NO.	#	SPRING	ｽﾌﾟﾘﾝｸﾞ	2	
22	NO PART NO.	#	SCREW	ｽｸﾘｭ	2	
23	209K2-43001		SCREW	ｽｸﾘｭ	2	
24	229F6-42201		SEAL,PANEL-COVER,A	ｼｰﾙ	1	
25	01033-05014		SCREW	ｽｸﾘｭ	3	

FIG.29 ELECTRIC PARTS

(F6022450) エレクトリックパーツ

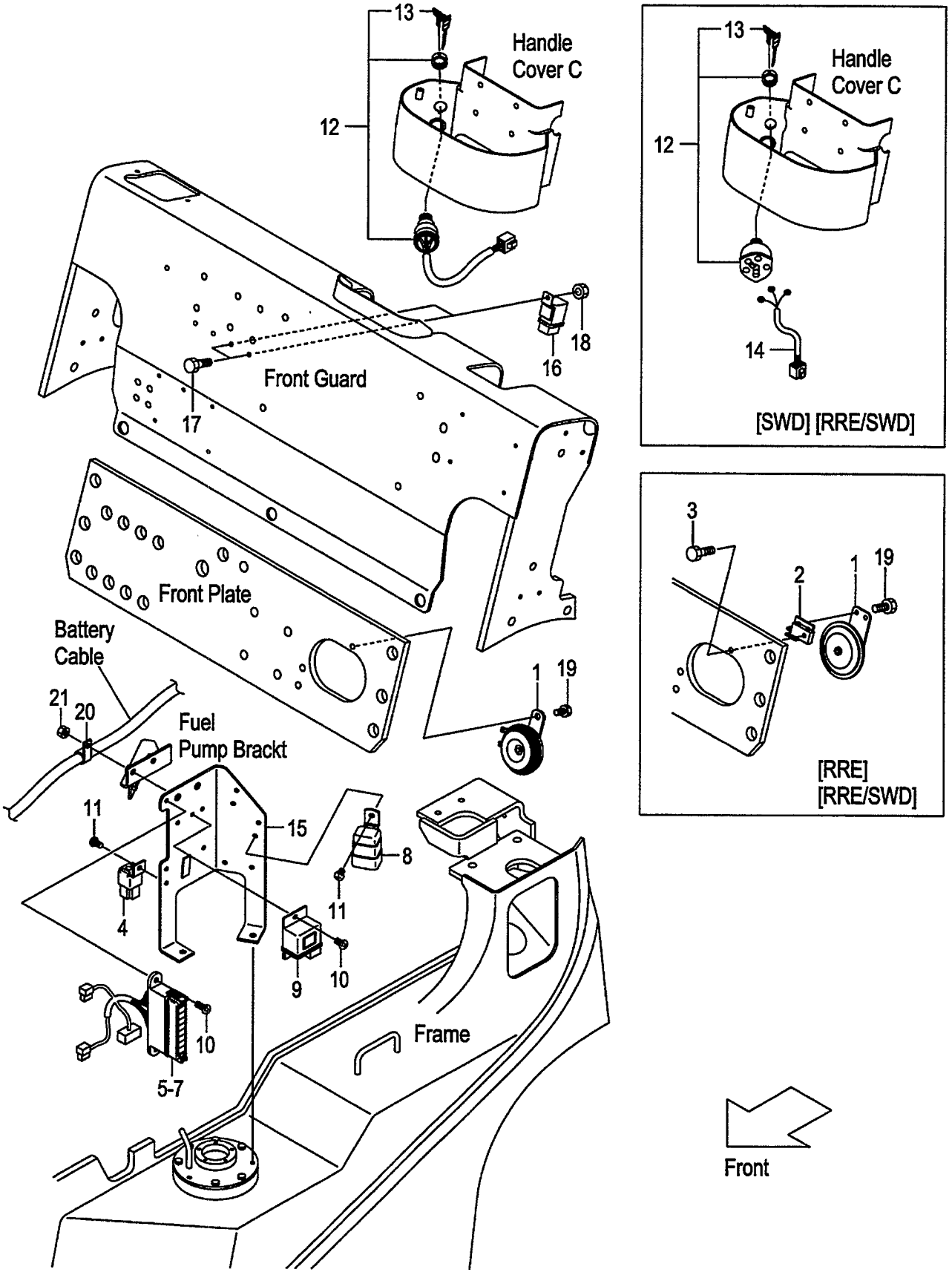

FIG.29
(F6022450)

A:FD20C18 FD20T18 FD25C18 FD25T18

Item No	Part No.	Mark	Description		Req'd	Remarks : Serial No.
1	216G2-43651		HORN	ﾎｰﾝ	1	
-	20712-40275		HORN	ﾎｰﾝ	1	[RRE][RRE/SWD]
2	539A9-92001		BRACKET,HORN	ﾌﾞﾗｹｯﾄ	1	[RRE][RRE/SWD]
3	01183-06025		BOLT	ﾎﾞﾙﾄ	1	[RRE][RRE/SWD]
4	216G2-43711		UNIT,FLASHER	ﾕﾆｯﾄ	1	
5	235C2-40301		BOX,FUSE	ﾎﾞｯｸｽ	1	INC.6,7
6	214T2-42311		FUSE,10A	ﾋｭｰｽﾞ	7	
7	214T2-42321		FUSE,30A	ﾋｭｰｽﾞ	1	
8	216G2-42321		RELAY,STARTER	ﾘﾚｰ	1	
9	241G2-42101		TIMER	ﾀｲﾏ	1	
10	214A2-42621		SCREW	ｽｸﾘｭ	3	
11	214A2-42611		SCREW	ｽｸﾘｭ	2	
12	216G2-42311		SWITCH,STARTER	ｽｲｯﾁ	1	INC.13
-	24352-42521		SWITCH,STARTER	ｽｲｯﾁ	1	[SWD][RRE/SWD] INC.13
13	216G2-43401		KEY,SPARE,511323	ｷｰ	1	(1SET=2PCS)
-	216G2-43411		KEY,SPARE,512421	ｷｰ	(1)	(1SET=2PCS)
-	216G2-43421		KEY,SPARE,513454	ｷｰ	(1)	(1SET=2PCS)
-	93956-59279		KEY,SPARE,511323	ｷｰ	1	[SWD][RRE/SWD](1SET=2PCS)
14	534A7-72001		WIRE,LEAD	ﾜｲﾔ	1	[SWD][RRE/SWD]
15	218G2-42001		BRACKET,ELECTRIC	ﾌﾞﾗｹｯﾄ	1	
16	26062-42881		RELAY,12V	ﾘﾚｰ	2	
17	239A5-42381		BOLT	ﾎﾞﾙﾄ	2	
18	01400-00006		NUT	ﾅｯﾄ	2	
19	01185-08016		BOLT	ﾎﾞﾙﾄ	1	
-	01183-06016		BOLT	ﾎﾞﾙﾄ	2	[RRE][RRE/SWD]
20	214A2-42331		CLIP	ｸﾘｯﾌﾟ	1	
21	01400-00008		NUT	ﾅｯﾄ	1	

FIG.30 ELECTRIC PARTS

(F6022460) エレクトリックパーツ

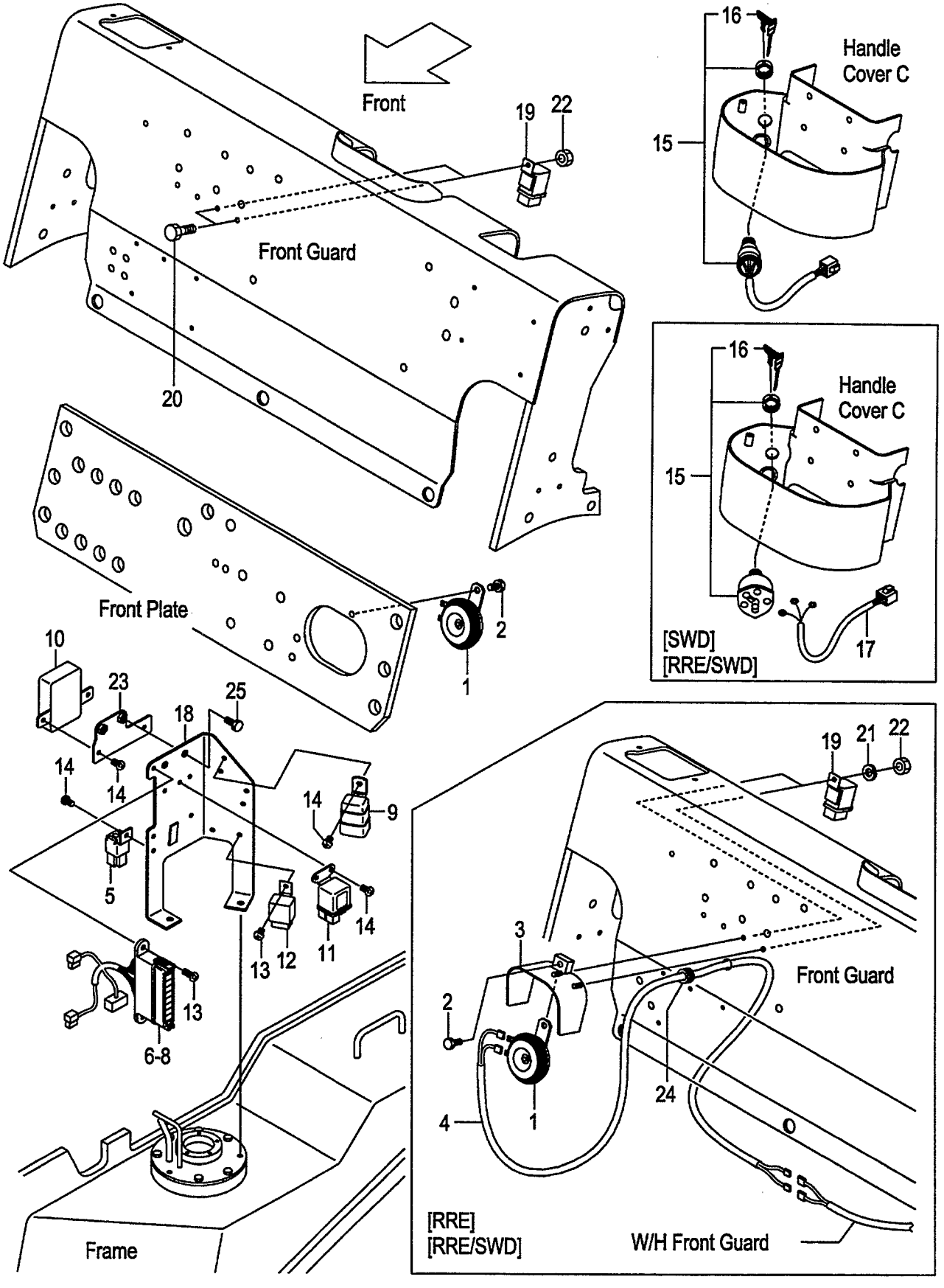

A:FD20C7 FD20T7 FD25C7 FD25T7
B:FD20W7 FD25W7

FIG.30
(F6022460)

Item No	Part No.	Mark	Description		Req'd	Remarks : Serial No.
1	216G2-43651		HORN	ホーン	1	
2	01185-08016		BOLT	ﾎﾞﾙﾄ	1	
-	01185-08012		BOLT	ﾎﾞﾙﾄ	1	[RRE][RRE/SWD]
3	539A9-92301		BRACKET,HORN	ﾌﾞﾗｹｯﾄ	1	[RRE][RRE/SWD]
4	539A9-92351		WIRE-HARNESS,RRE	ﾜｲﾔﾊｰﾈｽ	1	[RRE][RRE/SWD]
5	216G2-43711		UNIT,FLASHER	ﾕﾆｯﾄ	1	
6	235C2-40301		BOX,FUSE	ﾎﾞｯｸｽ	1	INC.7,8
7	214T2-42311		FUSE,10A	ﾋｭｰｽﾞ	7	
8	214T2-42321		FUSE,30A	ﾋｭｰｽﾞ	1	
9	216G2-42321		RELAY,STARTER	ﾘﾚｰ	1	
10	242F2-42301		TIMER,QGS-CONTROLLER	ﾀｲﾏ	1	
11	242F2-42311		RELAY,GLOW-PLUG	ﾘﾚｰ	1	
12	242F2-42321		DETECTOR	ﾃﾞｨﾃｸﾀ	1	
13	214A2-42621		SCREW	ｽｸﾘｭ	3	
14	214A2-42611		SCREW	ｽｸﾘｭ	6	
15	216G2-42311		SWITCH,STARTER	ｽｲｯﾁ	1	INC.16
-	24352-42521		SWITCH,STARTER	ｽｲｯﾁ	1	[SWD][RRE/SWD] INC.16
16	216G2-43401		KEY,SPARE,511323	ｷｰ	1	(1SET=2PCS)
-	216G2-43411		KEY,SPARE,512421	ｷｰ	(1)	(1SET=2PCS)
-	216G2-43421		KEY,SPARE,513454	ｷｰ	(1)	(1SET=2PCS)
-	93956-59279		KEY,SPARE,511323	ｷｰ	1	[SWD][RRE/SWD](1SET=2PCS)
17	534A7-72001		WIRE,LEAD	ﾜｲﾔ	1	[SWD][RRE/SWD]
18	218G2-42001		BRACKET,ELECTRIC	ﾌﾞﾗｹｯﾄ	1	
19	26062-42881		RELAY,12V	ﾘﾚｰ	2	
20	239A5-42381		BOLT	ﾎﾞﾙﾄ	2	(WITHOUT RRE,RRE/SWD)
21	02010-00006		WASHER	ﾜｯｼｬ	2	[RRE][RRE/SWD]
22	01400-00006		NUT	ﾅｯﾄ	2	
23	242F2-42001		BRACKET,QGS-CONTROL	ﾌﾞﾗｹｯﾄ	1	
24	205A2-63311		GROMMET	ｸﾞﾛﾒｯﾄ	1	[RRE][RRE/SWD]
25	01183-08016		BOLT	ﾎﾞﾙﾄ	2	

FIG.31 BATTERY
(F6022480) ﾊﾞｯﾃﾘ

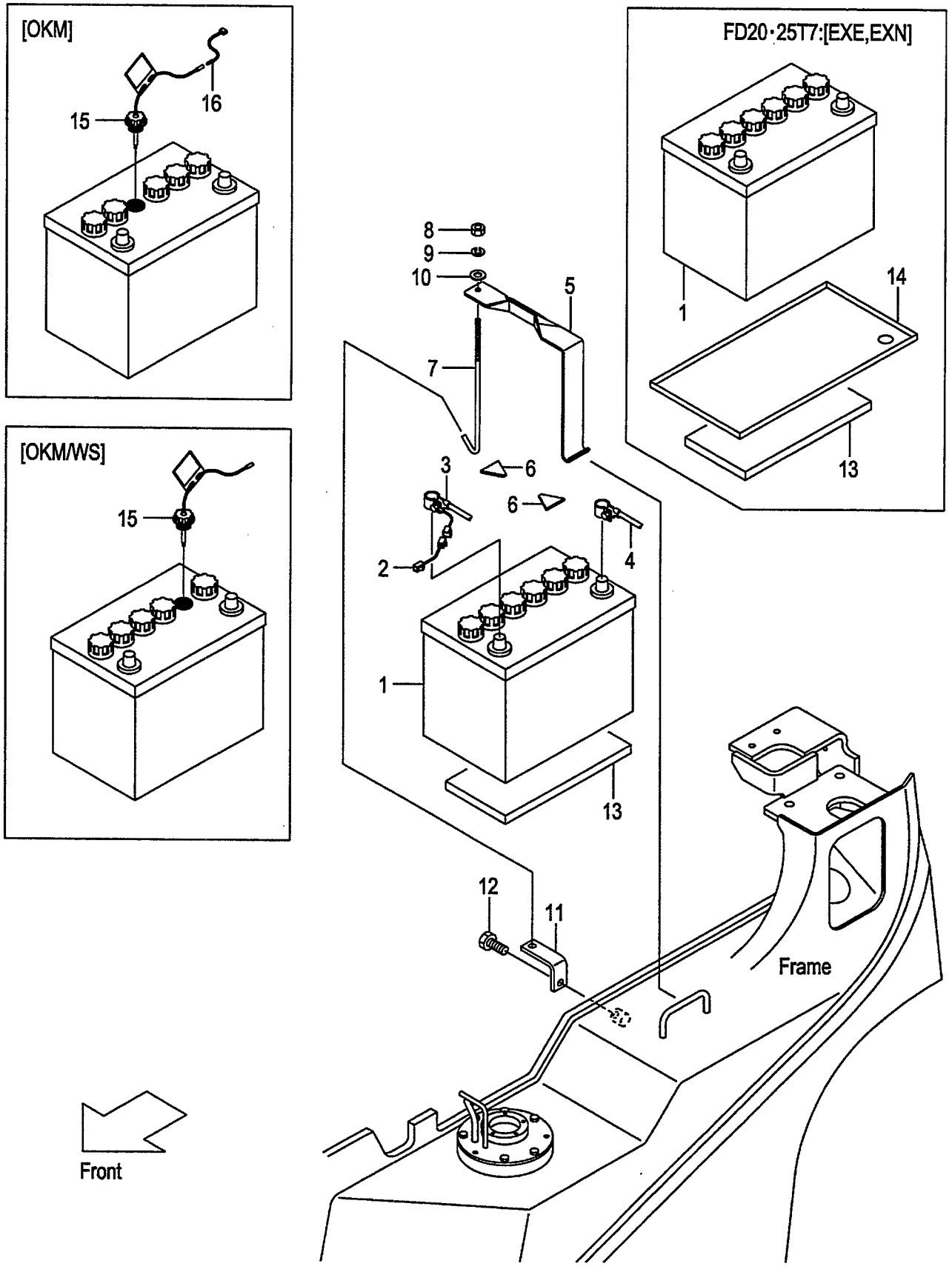

FIG.31
(F6022480)

A:FD20C18 FD20T18 FD25C18 FD25T18 C:FD20T7 FD25T7
B:FD20C7 FD25C7 D:FD20W7 FD25W7

Item No	Part No.	Mark	Description		Req'd	Remarks : Serial No.
1	58106-31011		BATTERY,WET,80D26R	ﾊﾞｯﾃﾘ	1	A
-	230C2-42301		BATTERY,WET,95D31R	ﾊﾞｯﾃﾘ	1	B,C,D
-	534A7-02001		BATTERY,WET,115D31R	ﾊﾞｯﾃﾘ	1	[WS]
2	25592-42081		WIRE,FUSIBLE-LINK	ﾜｲﾔ	1	
3	217G2-42151		CABLE,BATTERY(+)	ｹｰﾌﾞﾙ	1	A
-	242F2-42151		CABLE,BATTERY(+)	ｹｰﾌﾞﾙ	1	B,C,D
4	238A2-42151		CABLE,BATTERY(-)	ｹｰﾌﾞﾙ	1	
5	217G2-42021		HOLDER,BATTERY	ﾎﾙﾀﾞ	1	
6	216G2-43111		RUBBER	ﾗﾊﾞｰ	2	
7	256A2-42171		BOLT,ANCHOR	ﾎﾞﾙﾄ	1	
8	01420-00006		NUT	ﾅｯﾄ	1	
9	02010-00006		WASHER	ﾜｯｼｬ	1	
10	23452-42181		WASHER	ﾜｯｼｬ	1	
11	239A2-42101		HOOK,ANCHOR-BOLT	ﾌｯｸ	1	
12	01185-08016		BOLT	ﾎﾞﾙﾄ	1	
13	239B2-42301		RUBBER	ﾗﾊﾞｰ	1	
14	539A2-72121		CASE,BATTERY	ｹｰｽ	1	C
						[EXE][EXN]
15	521A2-42001		CAP,BATTERY	ｷｬｯﾌﾟ	1	[OKM]
-	522A2-42001		CAP,BATTERY	ｷｬｯﾌﾟ	1	[OKM/WS]
16	539A6-22021		WIRE,LEAD	ﾜｲﾔ	1	[OKM](WITHOUT OKM/WS)

FIG.32 FRONT GUARD WIRE HARNESS (CLUTCH & OIL CLUTCH)

(F60224C0) ﾌﾛﾝﾄｶﾞｰﾄﾞﾜｲﾔﾊｰﾈｽ

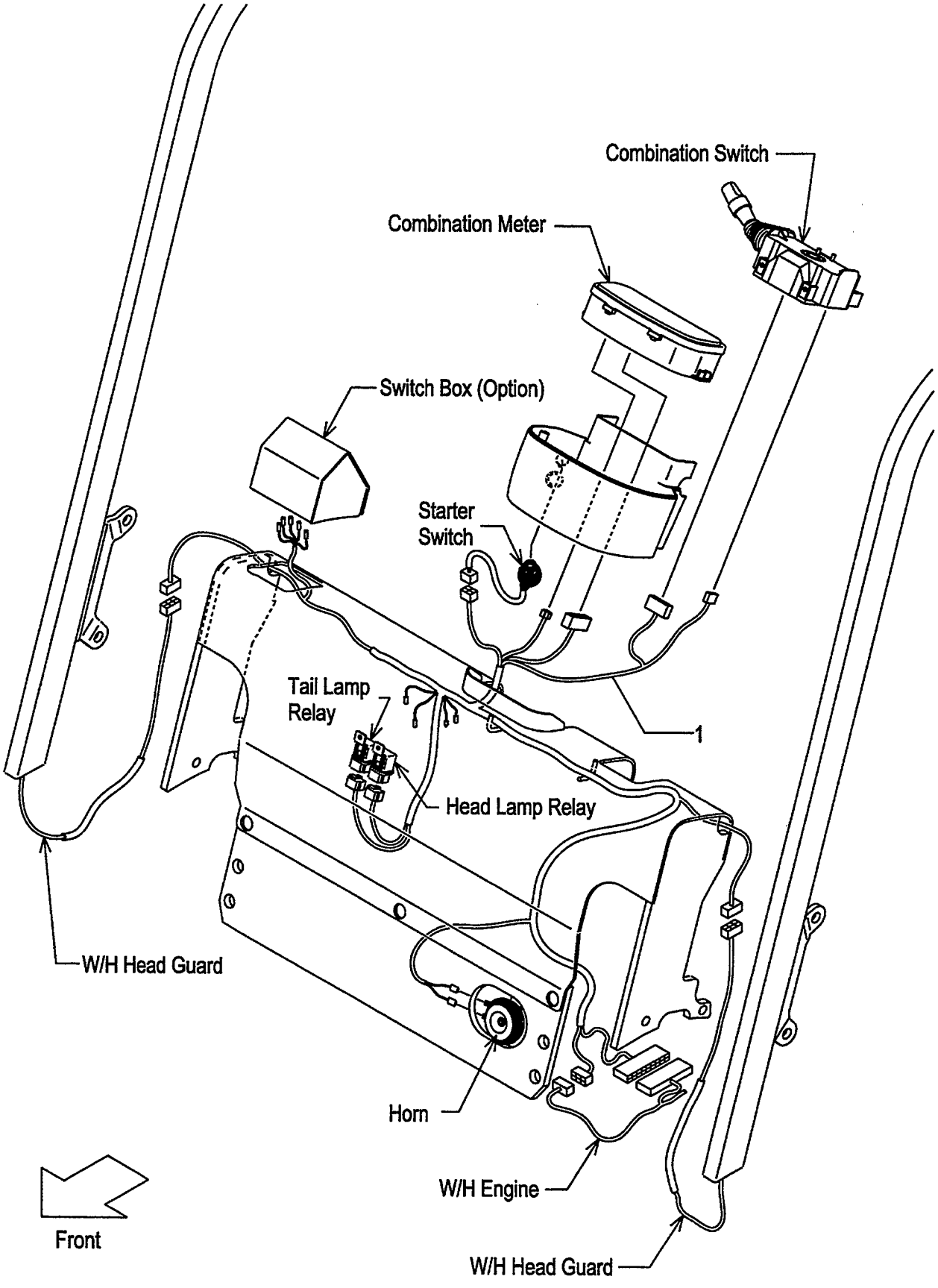

A:FD20C18 FD25C18
B:FD20C7 FD25C7
C:FD20W7 FD25W7

FIG.32
(F60224C0)

Item No	Part No.	Mark	Description	Req'd	Remarks : Serial No.
1	239A2-42201		WIRE-HARNESS,F.GUARD ﾜｲﾔﾊｰﾈｽ	1	
-	539A3-72151		WIRE-HARNESS,F.GUARD ﾜｲﾔﾊｰﾈｽ	1	[FC]

FIG.33 FRONT GUARD WIRE HARNESS (TOR-CON)

(F60224D0) フロントガードワイヤハーネス

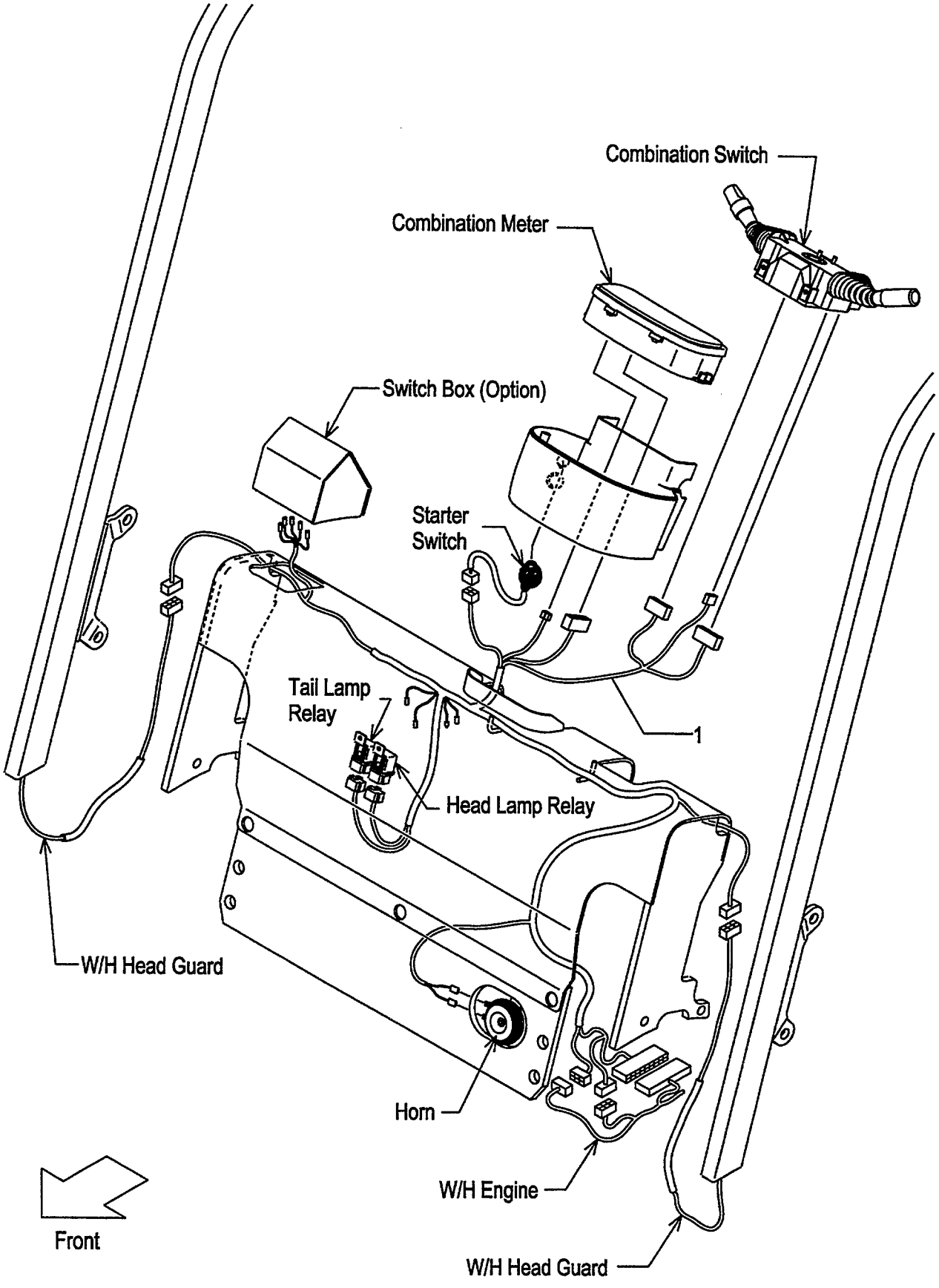

A:FD20T18 FD25T18
B:FD20T7 FD25T7

FIG.33
(F60224D0)

Item No	Part No.	Mark	Description	Req'd	Remarks : Serial No.
1	239B2-42201		WIRE-HARNESS,F.GUARD ﾜｲﾔﾊｰﾈｽ	1	
-	539B3-82301		WIRE-HARNESS,F.GUARD ﾜｲﾔﾊｰﾈｽ	1	B [EXE][EXN]
-	539B2-32201		WIRE-HARNESS,F.GUARD ﾜｲﾔﾊｰﾈｽ	1	[LCR]
-	539B3-72151		WIRE-HARNESS,F.GUARD ﾜｲﾔﾊｰﾈｽ	1	[FC]
-	539B3-72201		WIRE-HARNESS,F.GUARD ﾜｲﾔﾊｰﾈｽ	1	[FC/LCR]

FIG.34 ENGINE WIRE HARNESS (CLUTCH)

(F60224G0) エンジンワイヤハーネス

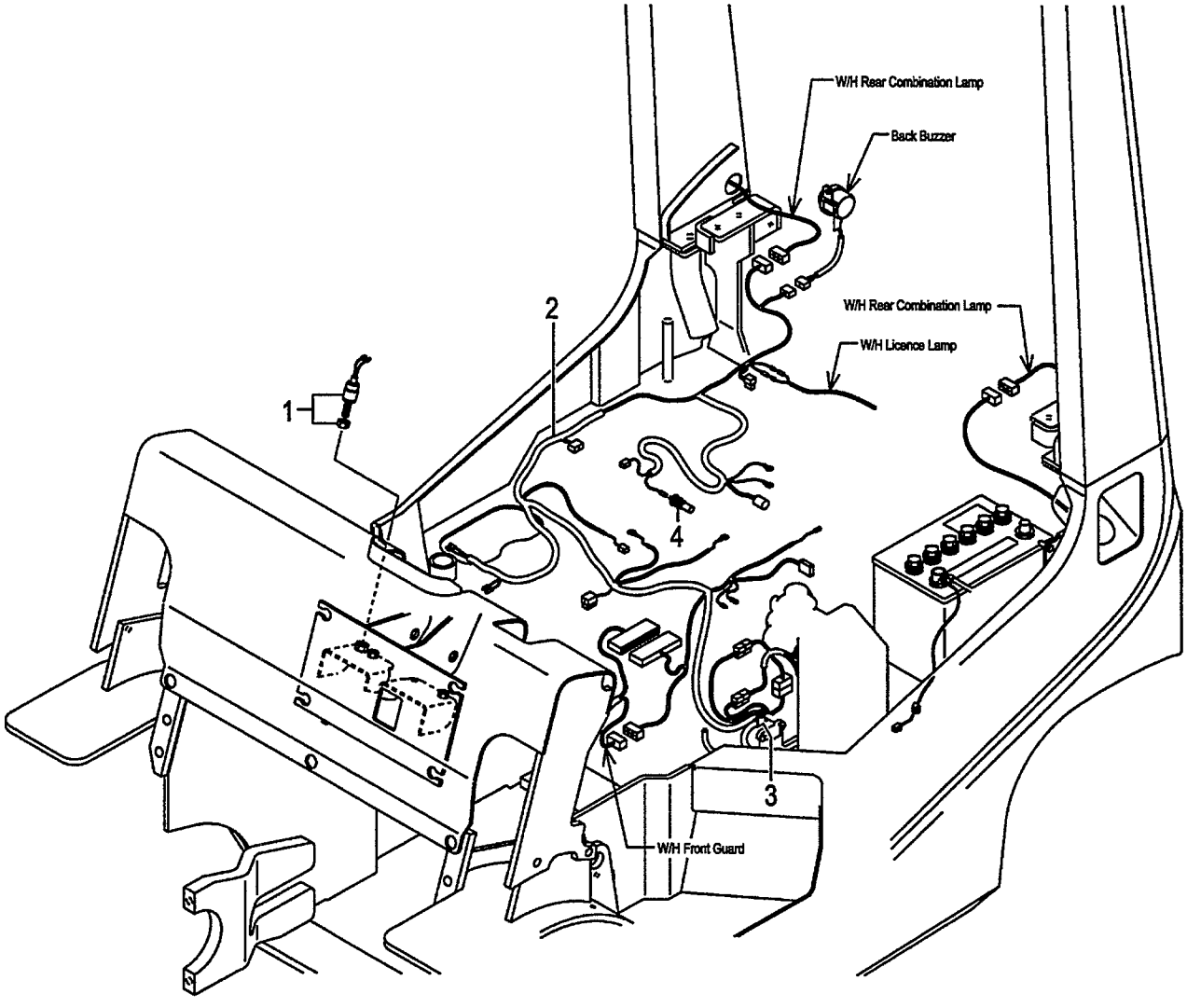

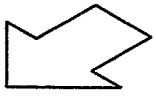

Front

FIG.34
(F60224G0)

A:FD20C18 FD25C18

Item No	Part No.	Mark	Description		Req'd	Remarks : Serial No.
1	23232-42072		SWITCH,STOP-LAMP	ｽｲｯﾁ	1	
2	241G2-42001		WIRE-HARNESS,ENGINE	ﾜｲﾔﾊｰﾈｽ	1	
-	541G3-72001		WIRE-HARNESS,ENGINE	ﾜｲﾔﾊｰﾈｽ	1	[FC]
3	214A2-42331		CLIP	ｸﾘｯﾌﾟ	3	
4	241G2-42121		UNIT,SENDING	ﾕﾆｯﾄ	1	

FIG.35 ENGINE WIRE HARNESS (CLUTCH)(OIL CLUTCH)

(F60224H0) エンジンワイヤハーネス

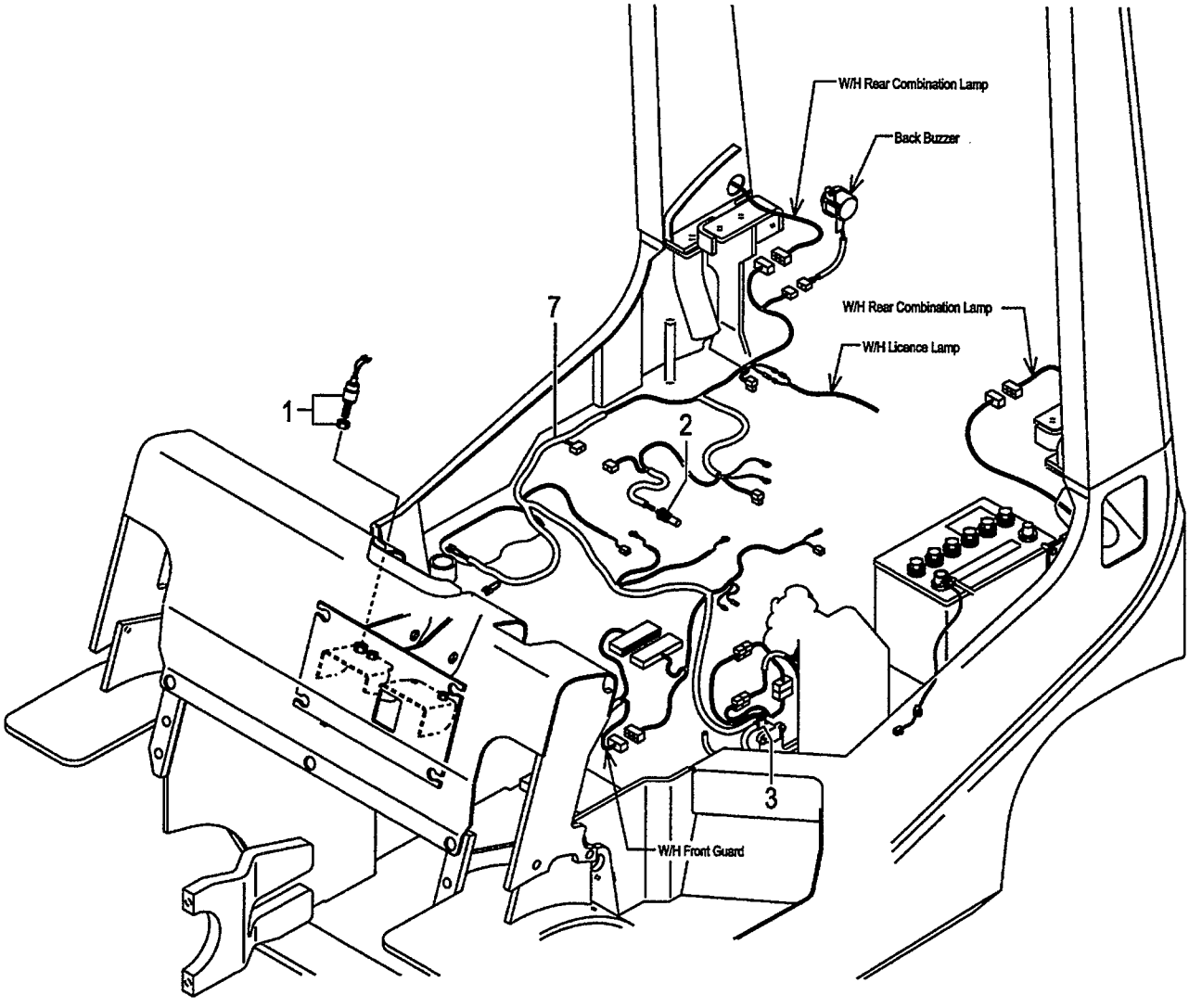

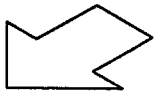

Front

A:FD20C7 FD25C7
B:FD20W7 FD25W7

FIG.35
(F60224H0)

Item No	Part No.	Mark	Description		Req'd	Remarks : Serial No.
1	23232-42072		SWITCH,STOP-LAMP	ｽｲｯﾁ	1	
2	23652-44001		UNIT,SENDING	ﾕﾆｯﾄ	1	
3	214A2-42331		CLIP	ｸﾘｯﾌﾟ	5	
4	01100-06010	+	BOLT	ﾎﾞﾙﾄ	1	
5	02010-00006	+	WASHER	ﾜｯｼｬ	1	
6	02000-00006	+	WASHER	ﾜｯｼｬ	1	
7	242F2-42251		WIRE-HARNESS,ENGINE	ﾜｲﾔﾊｰﾈｽ	1	
-	542F3-72001		WIRE-HARNESS,ENGINE	ﾜｲﾔﾊｰﾈｽ	1	[FC]

FIG.36 ENGINE WIRE HARNESS (TOR-CON)

(F60224J0) エンジンワイヤハーネス

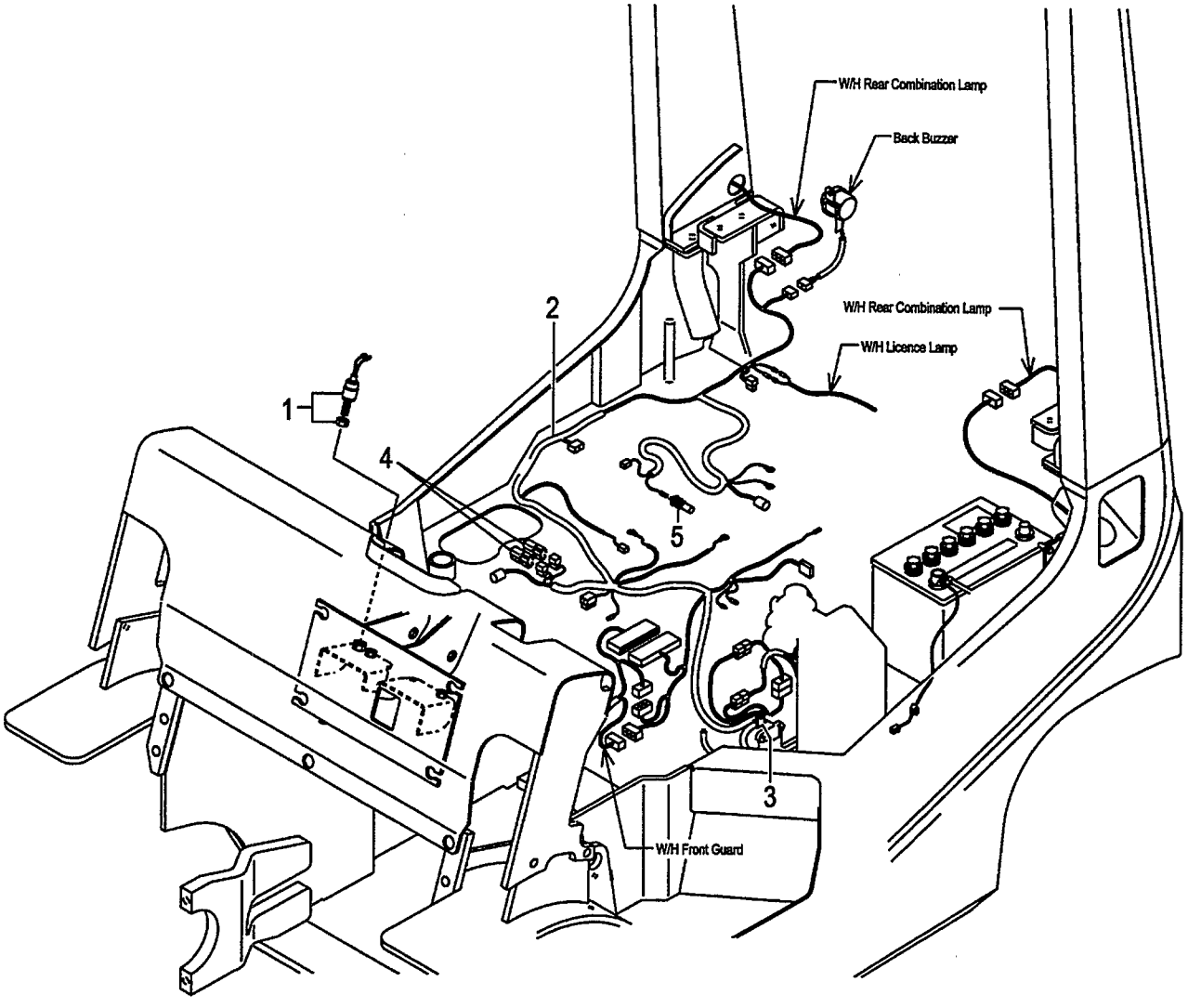

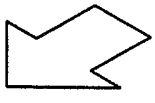

Front

FIG.36
(F60224J0)

A:FD20T18 FD25T18

Item No	Part No.	Mark	Description		Req'd	Remarks : Serial No.
1	23232-42072		SWITCH,STOP-LAMP	ｽｲｯﾁ	1	
2	241H2-42001		WIRE-HARNESS,ENGINE	ﾜｲﾔﾊｰﾈｽ	1	
-	541H3-72001		WIRE-HARNESS,ENGINE	ﾜｲﾔﾊｰﾈｽ	1	[FC]
3	214A2-42331		CLIP	ｸﾘｯﾌﾟ	3	
4	230C2-42201		DIODE,3A	ﾀﾞｲｵｰﾄﾞ	2	
5	241G2-42121		UNIT,SENDING	ﾕﾆｯﾄ	1	

FIG.37 ENGINE WIRE HARNESS (TOR-CON)

(F60224K0) エンジンワイヤハーネス

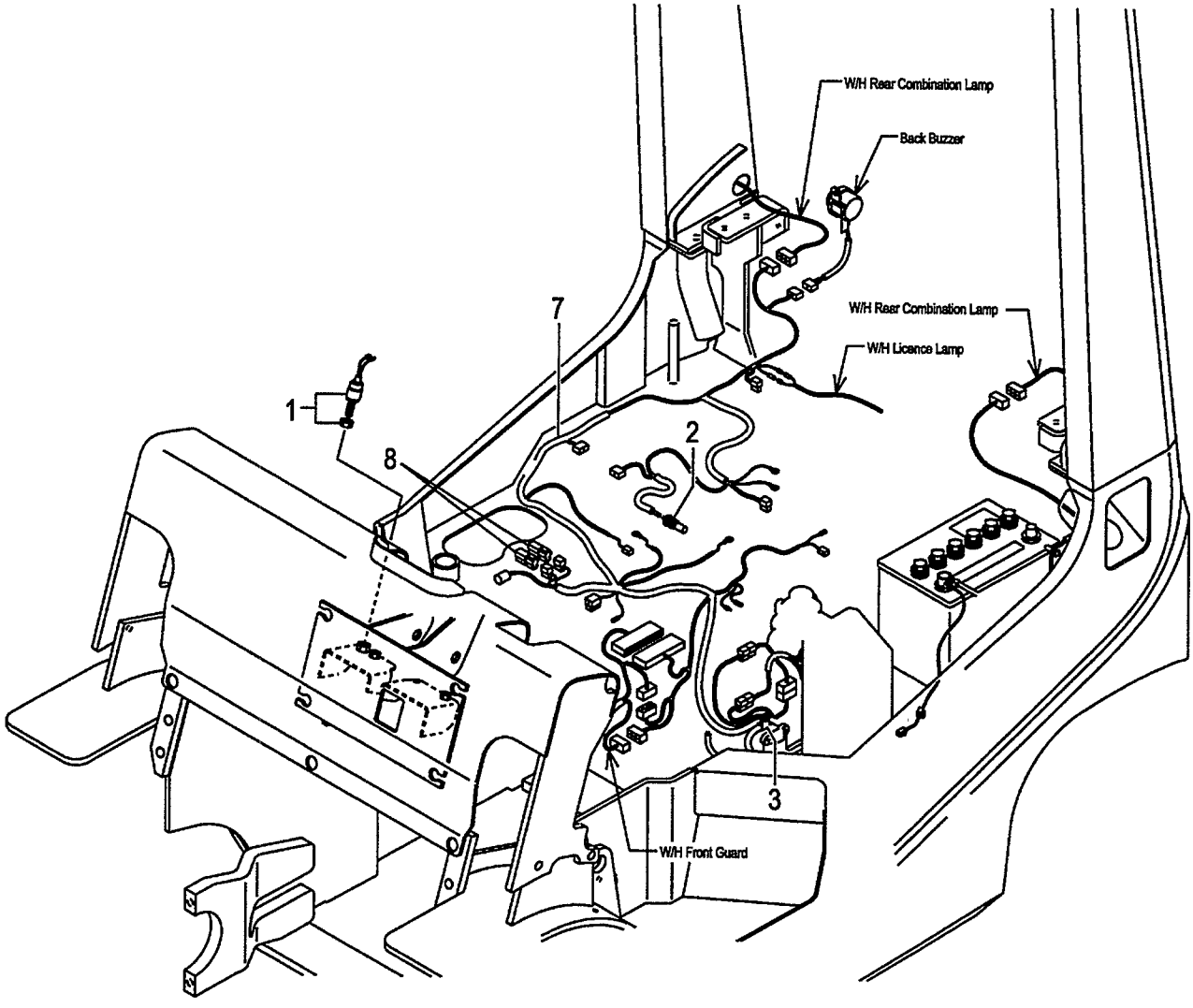

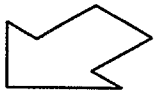

Front

FIG.37
(F60224K0)

A:FD20T7 FD25T7

Item No	Part No.	Mark	Description		Req'd	Remarks : Serial No.
1	23232-42072		SWITCH,STOP-LAMP	ｽｲｯﾁ	1	
2	23652-44001		UNIT,SENDING	ﾕﾆｯﾄ	1	
3	214A2-42331		CLIP	ｸﾘｯﾌﾟ	5	
4	01100-06010	+	BOLT	ﾎﾞﾙﾄ	1	
5	02010-00006	+	WASHER	ﾜｯｼｬ	1	
6	02000-00006	+	WASHER	ﾜｯｼｬ	1	
7	242G2-42251		WIRE-HARNESS,ENGINE	ﾜｲﾔﾊｰﾈｽ	1	
-	542G3-72001		WIRE-HARNESS,ENGINE	ﾜｲﾔﾊｰﾈｽ	1	[FC]
8	230C2-42201		DIODE,3A	ﾀﾞｲｵｰﾄﾞ	2	

FIG.38 BACK BUZZER
(F60224A0) ﾊﾞｯｸﾌﾞｻﾞｰ

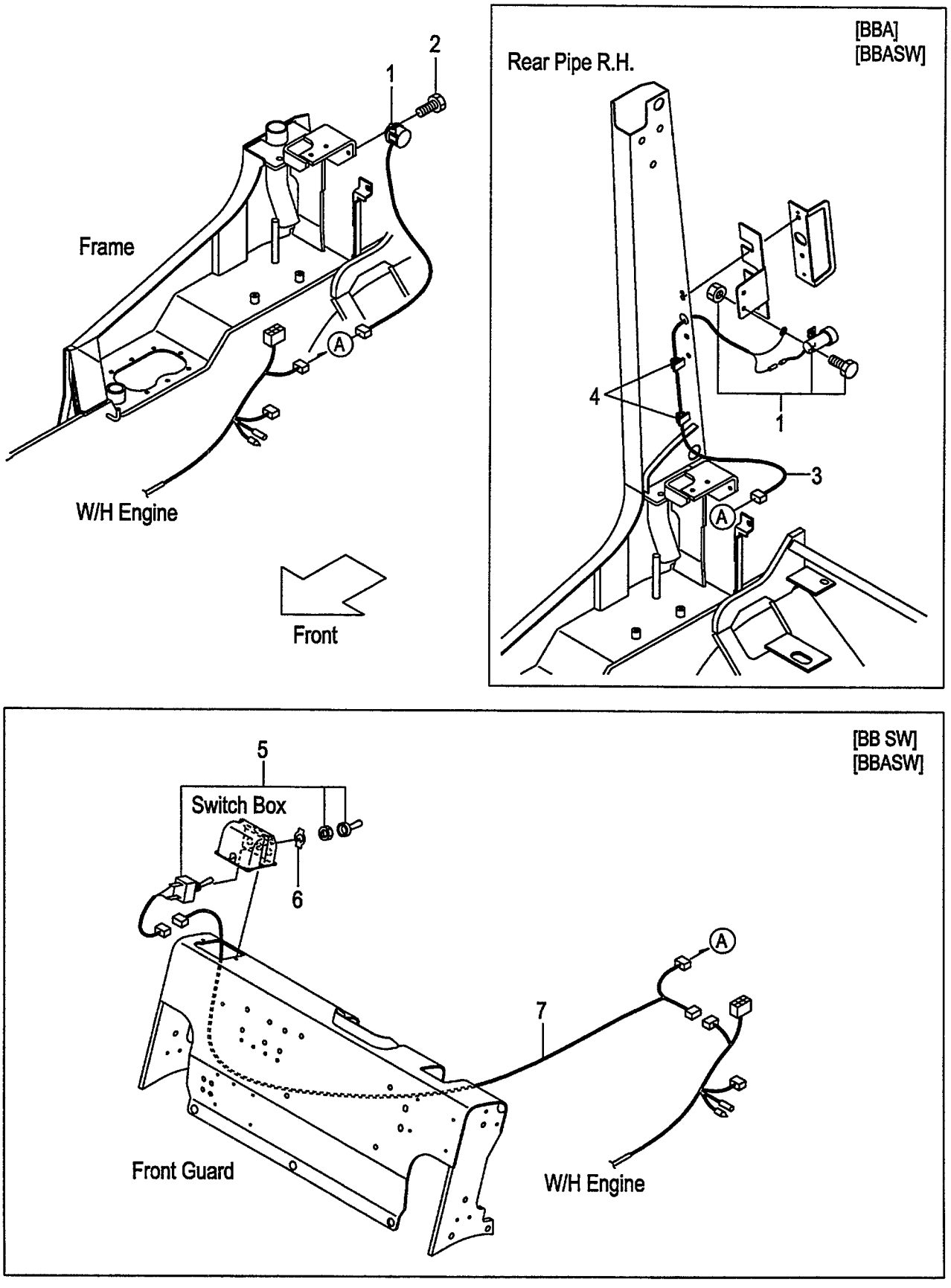

FIG.38
(F60224A0)

A:FD20C18 FD20T18 FD25C18 FD25T18
B:FD20C7 FD20T7 FD25C7 FD25T7 FD20W7 FD25W7

Item No	Part No.	Mark	Description		Req'd	Remarks : Serial No.
1	234A2-42301		BUZZER,BACK,12V	ﾌﾞｻﾞｰ	1	
-	214A2-44001		BUZZER,BACK,12V	ﾌﾞｻﾞｰ	1	[BBA][BBASW]
2	01185-08016		BOLT	ﾎﾞﾙﾄ	1	(WITHOUT BBA,BBASW)
3	516G1-32012		WIRE,LEAD	ﾜｲﾔ	1	[BBA][BBASW]
4	27732-42311		CLAMP,HARNESS	ｸﾗﾝﾌﾟ	2	[BBA][BBASW]
5	57042-72091		SWITCH	ｽｲｯﾁ	1	[BB SW][BBASW]
6	27652-62211		PLATE,SWITCH	ﾌﾟﾚｰﾄ	1	[BB SW][BBASW]
7	516G1-32002		WIRE,LEAD	ﾜｲﾔ	1	[BB SW][BBASW]

FIG.39 LIGHT UNIT
(F6022490) ライトユニット

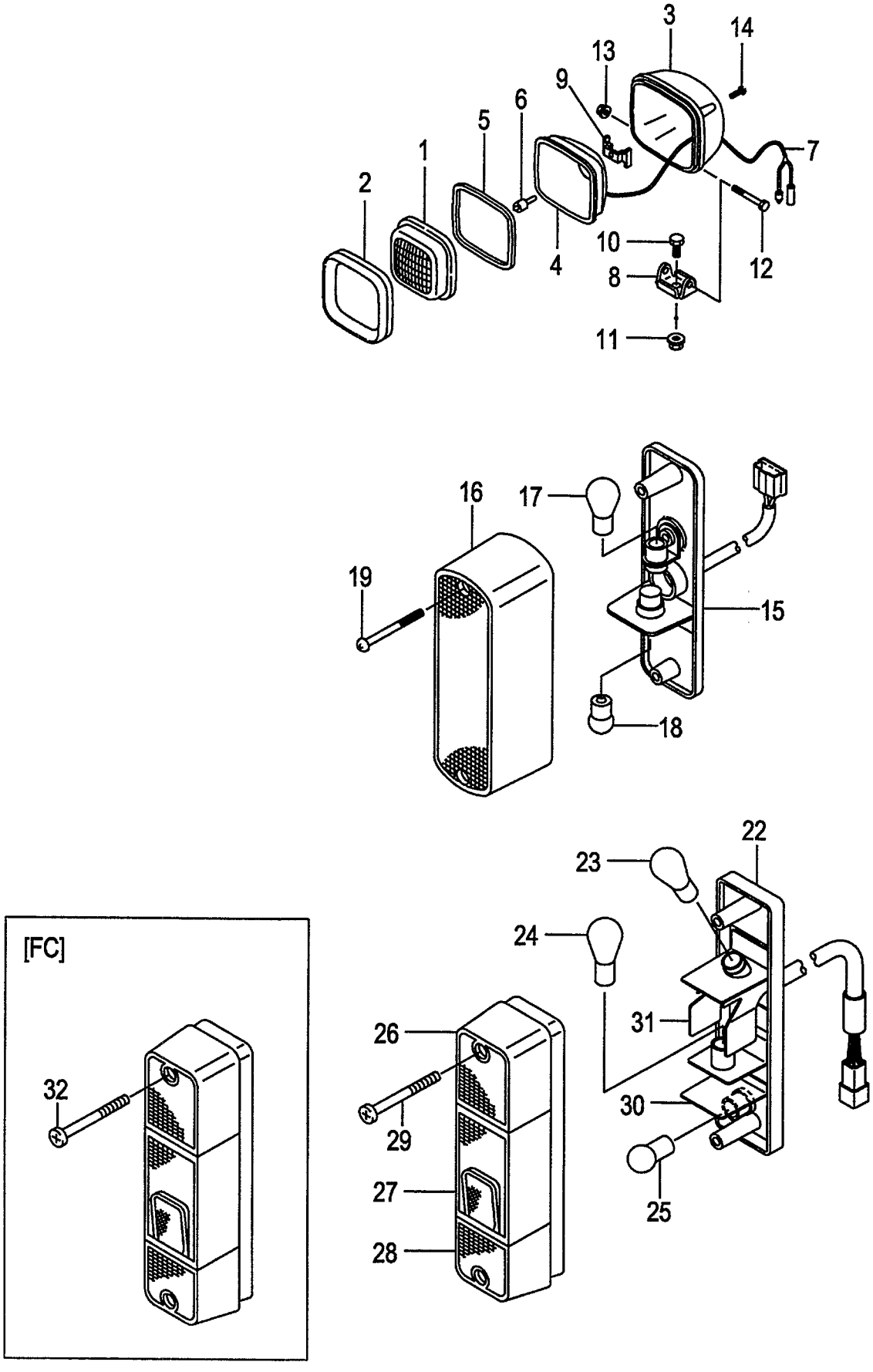

A:FD20C18 FD20T18 FD25C18 FD25T18
B:FD20C7 FD20T7 FD25C7 FD25T7 FD20W7 FD25W7

FIG.39
(F6022490)

Item No	Part No.	Mark	Description		Req'd	Remarks : Serial No.
A1	216G2-40602		LAMP-ASSY,HEAD	ﾍｯﾄﾞﾗﾝﾌﾟｱｯｾﾝ	2	INC.1-14
1	216G2-43502		LENS	ﾚﾝｽﾞ	2	
2	216G2-43631		RIM	ﾘﾑ	2	
3	NO PART NO.	#	HOUSING	ﾊｳｼﾞﾝｸﾞ	2	
4	NO PART NO.	#	REFLECTOR	ﾘﾌﾚｸﾀ	2	
5	216G2-43531		GASKET	ｶﾞｽｹｯﾄ	2	
6	216G2-43542		BULB,12V/55W	ﾊﾞﾙﾌﾞ	2	
7	216G2-43551		WIRE,LEAD	ﾜｲﾔ	2	
8	216G2-43562		BRACKET	ﾌﾞﾗｹｯﾄ	2	
9	216G2-43571		SPRING	ｽﾌﾟﾘﾝｸﾞ	2	
10	216G2-43582		BOLT	ﾎﾞﾙﾄ	2	
11	216G2-43592		NUT	ﾅｯﾄ	2	
12	216G2-43602		BOLT	ﾎﾞﾙﾄ	2	
13	216G2-43611		NUT	ﾅｯﾄ	2	
14	216G2-43622		SCREW	ｽｸﾘｭ	8	
A2	216G2-40701		LAMP-ASSY,FRONT-COMBINATION	ﾌﾛﾝﾄｺﾝﾋﾞﾈｰｼｮﾝﾗﾝﾌﾟｱｯｾﾝ	2	INC.15-19
15	NO PART NO.	#	BODY	ﾎﾞﾃﾞｨ	2	
16	216G2-40731		LENS	ﾚﾝｽﾞ	2	
17	216G2-40711		BULB,12V/27W	ﾊﾞﾙﾌﾞ	2	
18	216G2-40721		BULB,12V/10W	ﾊﾞﾙﾌﾞ	2	
19	NO PART NO.		SCREW	ｽｸﾘｭ	4	
20	239A2-42221	+	WIRE-HARNESS,H.GUARD	ﾜｲﾔﾊｰﾈｽ	2	
-	534A9-22211	+	WIRE-HARNESS,H.GUARD	ﾜｲﾔﾊｰﾈｽ	2	[HL][BKH]
21	04913-11100	+	BAND	ﾊﾞﾝﾄﾞ	2	(WITHOUT HL,BKH)
A3	214A2-40203		LAMP-ASSY,REAR-COMBINATION	ﾘﾔｰｺﾝﾋﾞﾈｰｼｮﾝﾗﾝﾌﾟｱｯｾﾝ	2	INC.22-31
22	NO PART NO.	#	BODY	ﾎﾞﾃﾞｨ	2	
23	210F2-42011		BULB,12V/23W	ﾊﾞﾙﾌﾞ	2	
24	210F2-42021		BULB,12V/23,8W	ﾊﾞﾙﾌﾞ	2	
25	210F2-42031		BULB,12V/10W	ﾊﾞﾙﾌﾞ	2	
26	210F2-42201		LENS,PLASTIC	ﾚﾝｽﾞ	2	
27	210F2-42211		LENS,PLASTIC	ﾚﾝｽﾞ	2	
28	210F2-42221		LENS,PLASTIC	ﾚﾝｽﾞ	2	
29	01030-05065		SCREW	ｽｸﾘｭ	4	(WITHOUT FC)
30	210F2-42231		SHADE	ｼｪｰﾄﾞ	2	
31	214A2-44511		SHADE	ｼｪｰﾄﾞ	2	
32	514A3-72091		BOLT,PAN-HEAD	ﾎﾞﾙﾄ	4	[FC]

FIG.40 LICENSE LIGHT
(F60224L0) ライセンスライト

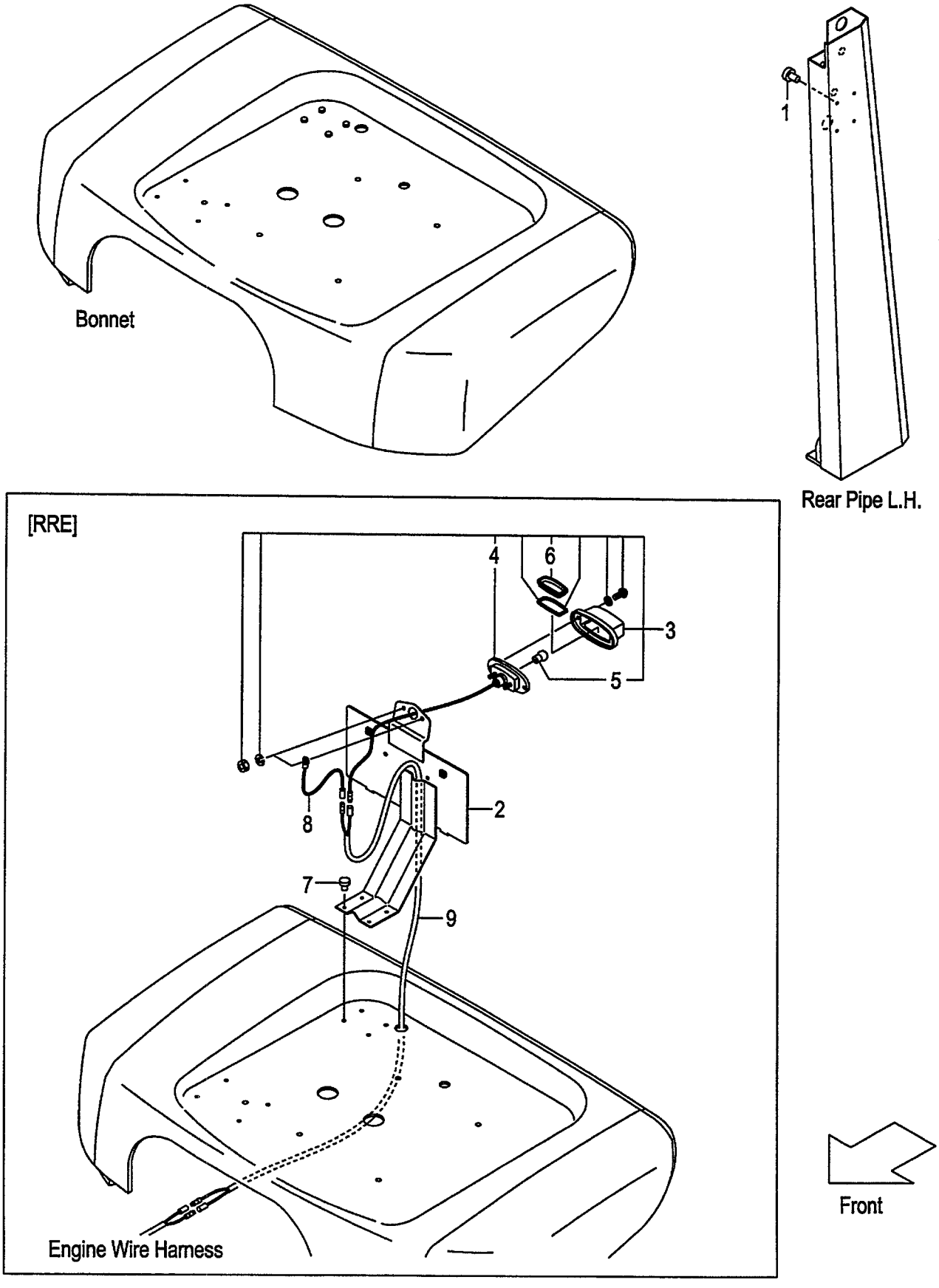

FIG.40
(F60224L0)

A:FD20C18 FD20T18 FD25C18 FD25T18
B:FD20C7 FD20T7 FD25C7 FD25T7 FD20W7 FD25W7

Item No	Part No.	Mark	Description		Req'd	Remarks : Serial No.
1	25596-42361		RIVET,NYLON	ﾘﾍﾞｯﾄ	4	
-	25596-42361		RIVET,NYLON	ﾘﾍﾞｯﾄ	4	[RRE]
2	539A9-92101		BRACKET,NUMBER-PLATE	ﾌﾞﾗｹｯﾄ	1	[RRE]
3	22132-40202		LAMP,LICENCE	ﾗﾝﾌﾟ	1	[RRE] INC.4-6
4	NO PART NO.	#	BODY	ﾎﾞﾃﾞｨ	1	[RRE]
5	22132-40041		BULB,12V/10W	ﾊﾞﾙﾌﾞ	1	[RRE]
6	22192-42411		LENS,PLASTIC	ﾚﾝｽﾞ	1	[RRE]
7	22256-42001		RIVET	ﾘﾍﾞｯﾄ	4	[RRE]
8	222A2-42511		WIRE,LEAD	ﾜｲﾔ	1	[RRE]
9	558A9-92001		WIRE-HARNESS,LICENCE	ﾜｲﾔﾊｰﾈｽ	1	[RRE]

FIG.41 LICENSE LIGHT [SCB001/RRE]

(F60224M0) ライセンスライト

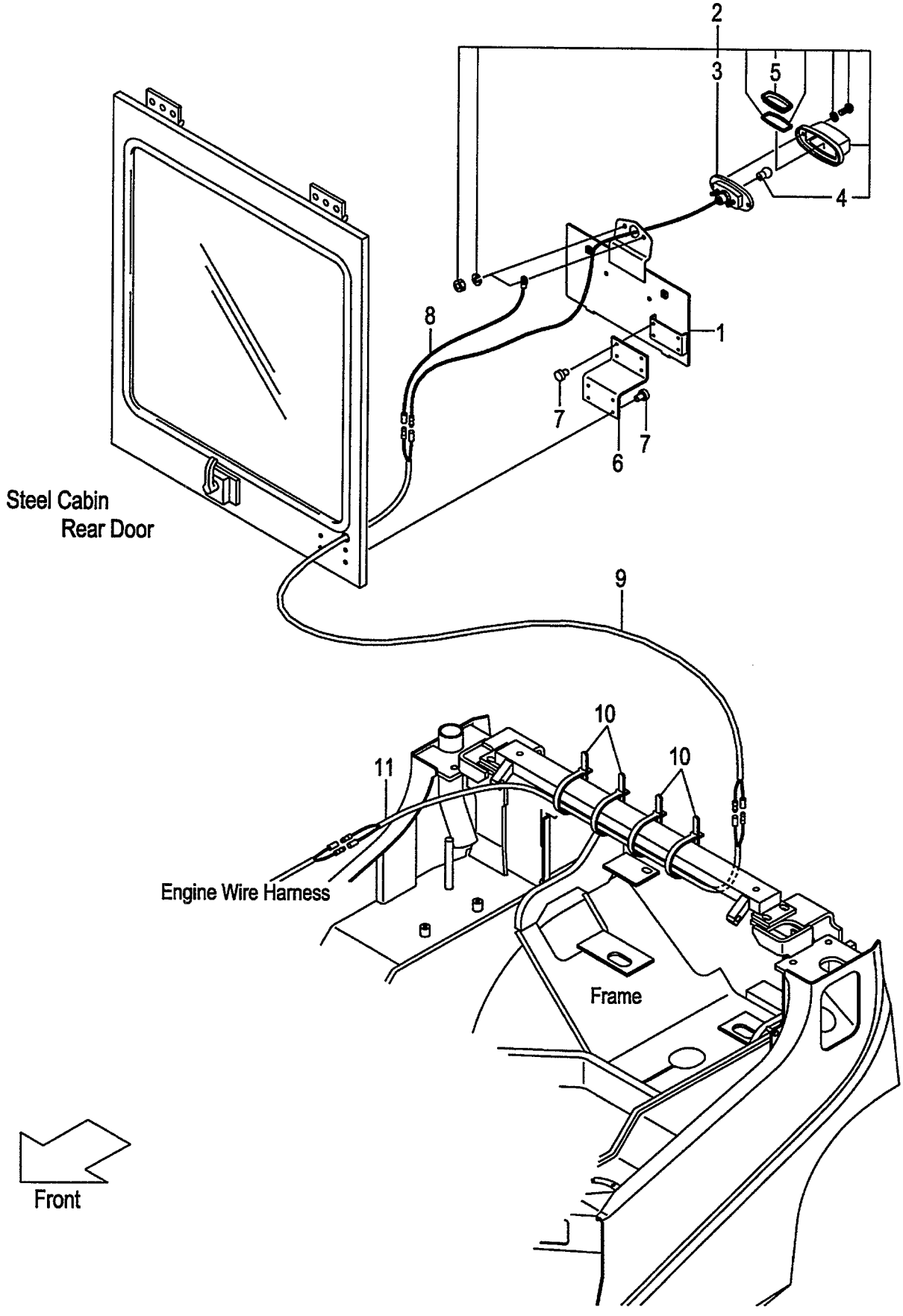

FIG.41
(F60224M0)

A:FD20C7 FD20T7 FD25C7 FD25T7 FD20W7 FD25W7

Item No	Part No.	Mark	Description	Req'd	Remarks : Serial No.
1	531A0-52521		BRACKET,NUMBER-PLATE ﾌﾞﾗｹｯﾄ	1	[SCB001/RRE]
2	22132-40202		LAMP,LICENCE ﾗﾝﾌﾟ	1	[SCB001/RRE] INC.3-5
3	NO PART NO.	#	BODY ﾎﾞﾃﾞｨ	1	[SCB001/RRE]
4	22132-40041		BULB,12V/10W ﾊﾞﾙﾌﾞ	1	[SCB001/RRE]
5	22192-42411		LENS,PLASTIC ﾚﾝｽﾞ	1	[SCB001/RRE]
6	539A5-32361		BRACKET ﾌﾞﾗｹｯﾄ	1	[SCB001/RRE]
7	22256-42001		RIVET ﾘﾍﾞｯﾄ	8	[SCB001/RRE]
8	222A2-42511		WIRE,LEAD ﾜｲﾔ	1	[SCB001/RRE]
9	534A9-92131		WIRE-HARNESS,LICENCE ﾜｲﾔﾊｰﾈｽ	1	[SCB001/RRE]
10	04913-11120		BAND ﾊﾞﾝﾄﾞ	4	[SCB001/RRE]
11	558A9-92001		WIRE-HARNESS,LICENCE ﾜｲﾔﾊｰﾈｽ	1	[SCB001/RRE]

FIG.42 LICENSE LIGHT [RRE/RW]

(F60224N0) ライセンスライト

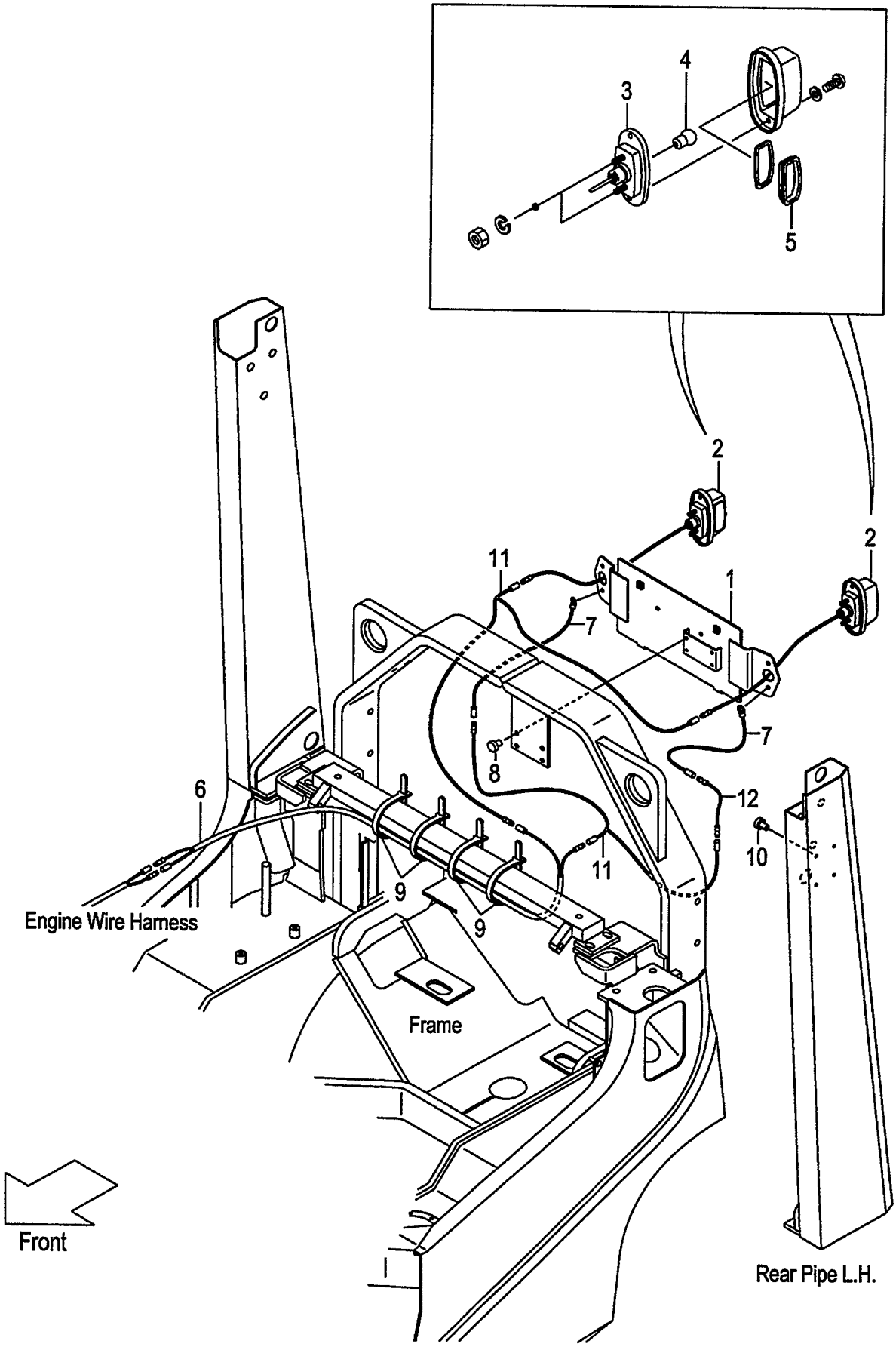

FIG.42
(F60224N0)

A:FD25C7 FD25T7 FD25W7

Item No	Part No.	Mark	Description	Req'd	Remarks : Serial No.
1	539C1-90151		BRACKET,NUMBER-PLATE ﾌﾞﾗｹｯﾄ	1	[RRE/RW]
2	22132-40202		LAMP,LICENCE ﾗﾝﾌﾟ	2	[RRE/RW] INC.3-5
3	NO PART NO.	#	BODY ﾎﾞﾃﾞｨ	2	[RRE/RW]
4	22132-40041		BULB,12V/10W ﾊﾞﾙﾌﾞ	2	[RRE/RW]
5	22192-42411		LENS,PLASTIC ﾚﾝｽﾞ	2	[RRE/RW]
6	534A9-92131		WIRE-HARNESS,LICENCE ﾜｲﾔﾊｰﾈｽ	1	[RRE/RW]
7	222A2-42511		WIRE,LEAD ﾜｲﾔ	2	[RRE/RW]
8	22256-42001		RIVET ﾘﾍﾞｯﾄ	4	[RRE/RW]
9	04913-11120		BAND ﾊﾞﾝﾄﾞ	4	[RRE/RW]
10	25596-42361		RIVET,NYLON ﾘﾍﾞｯﾄ	4	[RRE/RW]
11	25952-42311		WIRE,LEAD ﾜｲﾔ	2	[RRE/RW]
12	516G1-42211		WIRE,LEAD ﾜｲﾔ	1	[RRE/RW]

FIG.43 LICENSE LIGHT [TUE/RRE]

(F60224P0) ライセンスライト

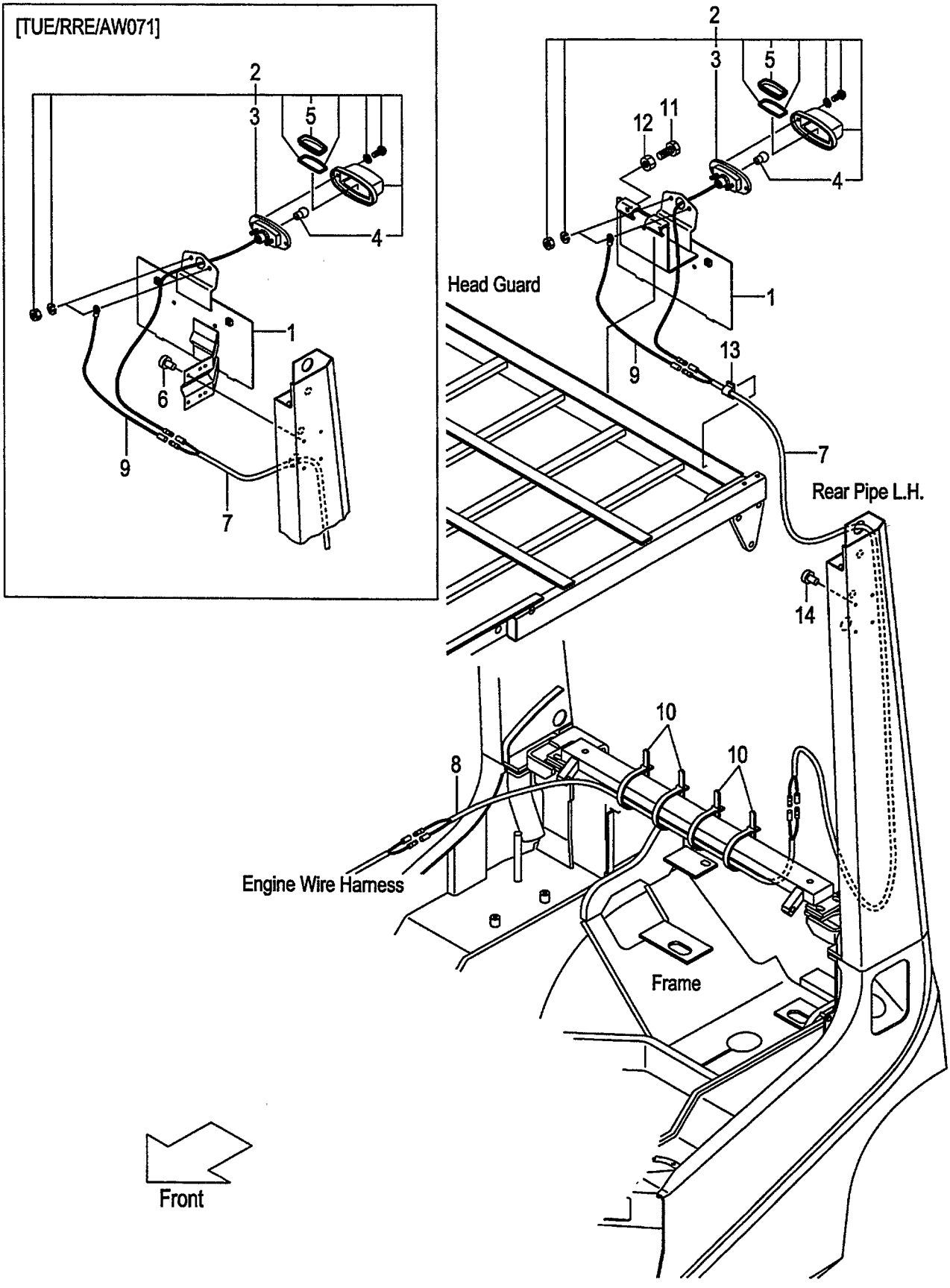

A:FD20C18 FD20T18 FD25C18 FD25T18
B:FD20C7 FD20T7 FD20W7
C:FD25C7 FD25T7 FD25W7

FIG.43
(F60224P0)

Item No	Part No.	Mark	Description	Req'd	Remarks : Serial No.
1	533A0-52051		BRACKET,NUMBER-PLATE ﾌﾞﾗｹｯﾄ	1	[TUE/RRE]
-	509P9-90101		BRACKET,NUMBER-PLATE ﾌﾞﾗｹｯﾄ	1	[TUE/RRE/AW071]
2	22132-40202		LAMP,LICENCE ﾗﾝﾌﾟ	1	[TUE/RRE] INC.3-5
3	NO PART NO.	#	BODY ﾎﾞﾃﾞｨ	1	[TUE/RRE]
4	22132-40041		BULB,12V/10W ﾊﾞﾙﾌﾞ	1	[TUE/RRE]
5	22192-42411		LENS,PLASTIC ﾚﾝｽﾞ	1	[TUE/RRE]
6	22256-42001		RIVET ﾘﾍﾞｯﾄ	4	[TUE/RRE/AW071]
7	534A9-92131		WIRE-HARNESS,LICENCE ﾜｲﾔﾊｰﾈｽ	1	[TUE/RRE]
-	516G9-92101		WIRE-HARNESS,LICENCE ﾜｲﾔﾊｰﾈｽ	1	[TUE/RRE/AW071]
8	558A9-92001		WIRE-HARNESS,LICENCE ﾜｲﾔﾊｰﾈｽ	1	[TUE/RRE]
9	222A2-42511		WIRE,LEAD ﾜｲﾔ	1	[TUE/RRE]
10	04913-11120		BAND ﾊﾞﾝﾄﾞ	4	[TUE/RRE]
11	01100-08020		BOLT ﾎﾞﾙﾄ	3	[TUE/RRE] (WITHOUT TUE/RRE/AW071)
12	01400-00008		NUT ﾅｯﾄ	3	[TUE/RRE] (WITHOUT TUE/RRE/AW071)
13	27732-42311		CLAMP,HARNESS ｸﾗﾝﾌﾟ	1	[TUE/RRE] (WITHOUT TUE/RRE/AW071)
14	25596-42361		RIVET,NYLON ﾘﾍﾞｯﾄ	4	[TUE/RRE] (WITHOUT TUE/RRE/AW071)

FIG.44 REAR WORKING LIGHT [RWLR]

(F60224Q0) リヤーワーキングライト

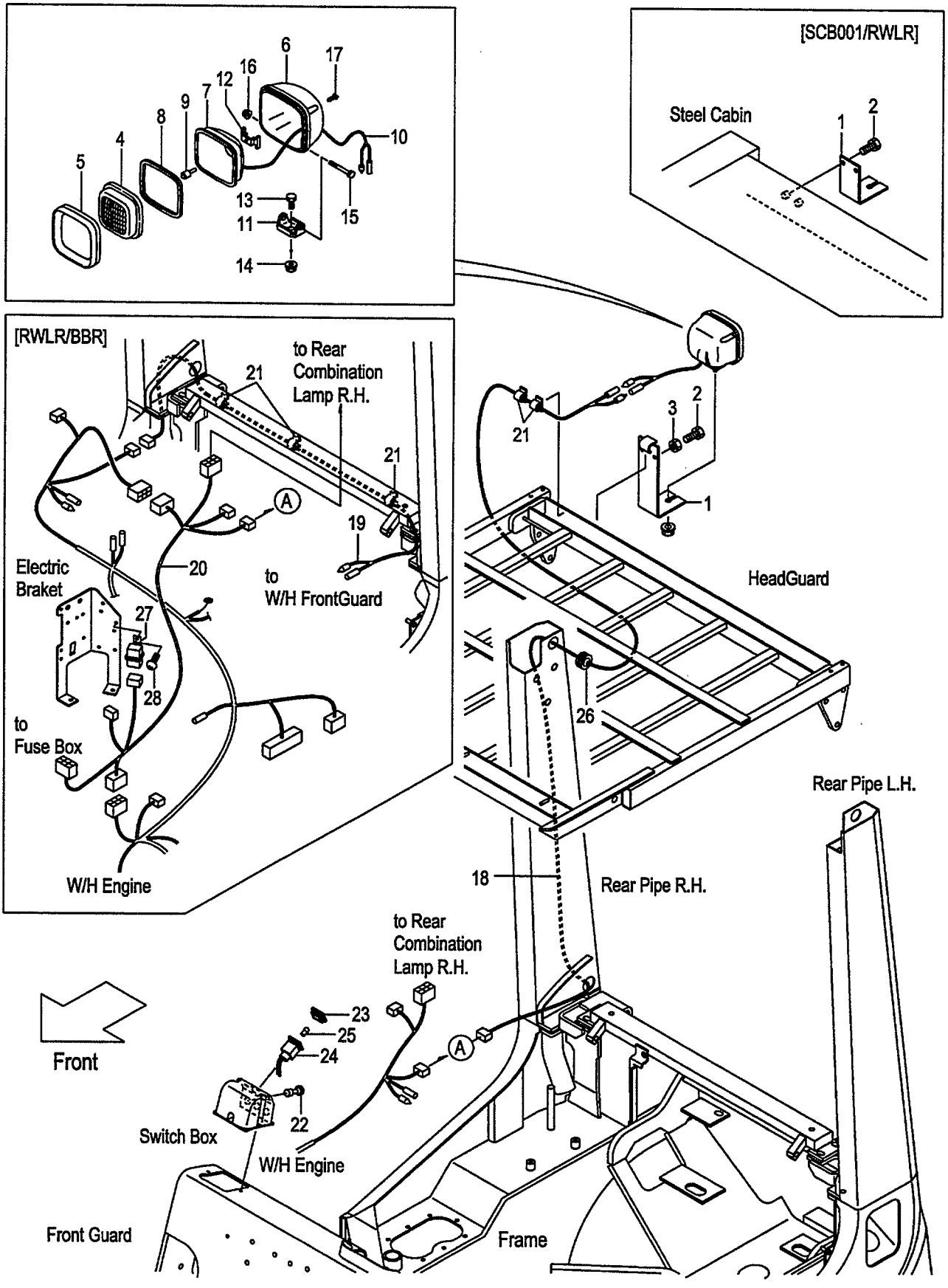

A:FD20C18 FD20T18 FD25C18 FD25T18
B:FD20C7 FD20T7 FD25C7 FD25T7 FD20W7 FD25W7

FIG.44
(F60224Q0)

Item No	Part No.	Mark	Description		Req'd	Remarks : Serial No.
1	516G1-42151		BRACKET,REAR-LAMP	ﾌﾞﾗｹｯﾄ	1	[RWLR]
-	539A1-42201		BRACKET,REAR-LAMP	ﾌﾞﾗｹｯﾄ	1	[RWLR/AW061]
-	530C1-42001		BRACKET,REAR-LAMP	ﾌﾞﾗｹｯﾄ	1	B [SCB001/RWLR]
2	01100-08020		BOLT	ﾎﾞﾙﾄ	3	[RWLR]
-	01185-08020		BOLT	ﾎﾞﾙﾄ	2	B [SCB001/RWLR]
3	01400-00008		NUT	ﾅｯﾄ	3	[RWLR](WITHOUT SCB001/RWLR)
A1	216G2-40602		LAMP-ASSY,HEAD	ﾍｯﾄﾞﾗﾝﾌﾟｱｯｾﾝ	1	[RWLR] INC.4-17
4	216G2-43502		LENS	ﾚﾝｽﾞ	1	[RWLR]
5	216G2-43631		RIM	ﾘﾑ	1	[RWLR]
6	NO PART NO.	#	HOUSING	ﾊｳｼﾞﾝｸﾞ	1	[RWLR]
7	NO PART NO.	#	REFLECTOR	ﾘﾌﾚｸﾀ	1	[RWLR]
8	216G2-43531		GASKET	ｶﾞｽｹｯﾄ	1	[RWLR]
9	216G2-43542		BULB,12V/55W	ﾊﾞﾙﾌﾞ	1	[RWLR]
10	216G2-43551		WIRE,LEAD	ﾜｲﾔ	1	[RWLR]
11	216G2-43562		BRACKET	ﾌﾞﾗｹｯﾄ	1	[RWLR]
12	216G2-43571		SPRING	ｽﾌﾟﾘﾝｸﾞ	1	[RWLR]
13	216G2-43582		BOLT	ﾎﾞﾙﾄ	1	[RWLR]
14	216G2-43592		NUT	ﾅｯﾄ	1	[RWLR]
15	216G2-43602		BOLT	ﾎﾞﾙﾄ	1	[RWLR]
16	216G2-43611		NUT	ﾅｯﾄ	1	[RWLR]
17	216G2-43622		SCREW	ｽｸﾘｭ	4	[RWLR]
18	516G1-42101		WIRE,LEAD	ﾜｲﾔ	1	[RWLR]
19	516G1-42111		WIRE,LEAD	ﾜｲﾔ	1	[RWLR/BBR]
20	539A8-92111		WIRE,LEAD	ﾜｲﾔ	1	[RWLR/BBR]
21	27732-42311		CLAMP,HARNESS	ｸﾗﾝﾌﾟ	2	[RWLR]
-	27732-42311		CLAMP,HARNESS	ｸﾗﾝﾌﾟ	5	[RWLR/BBR]
22	22672-42501		SWITCH,LAMP	ｽｲｯﾁ	1	[RWLR]
A2	522A1-42051		LAMP-ASSY,PILOT	ﾊﾟｲﾛｯﾄﾗﾝﾌﾟｱｯｾﾝ	1	[RWLR] INC.23-25
23	522A1-42061		LENS	ﾚﾝｽﾞ	1	[RWLR]
24	NO PART NO.	#	HOLDER	ﾎﾙﾀﾞ	1	[RWLR]
25	23302-42311		BULB,12V/3.4W	ﾊﾞﾙﾌﾞ	1	[RWLR]
26	22679-47301		GROMMET	ｸﾞﾛﾒｯﾄ	1	[RWLR]
27	26062-42881		RELAY,12V	ﾘﾚｰ	1	[RWLR/BBR]
28	214A2-42611		SCREW	ｽｸﾘｭ	1	[RWLR/BBR]

FIG.45 REAR WORKING LIGHT [RWLL]

(F60224R0) リヤーワーキングライト

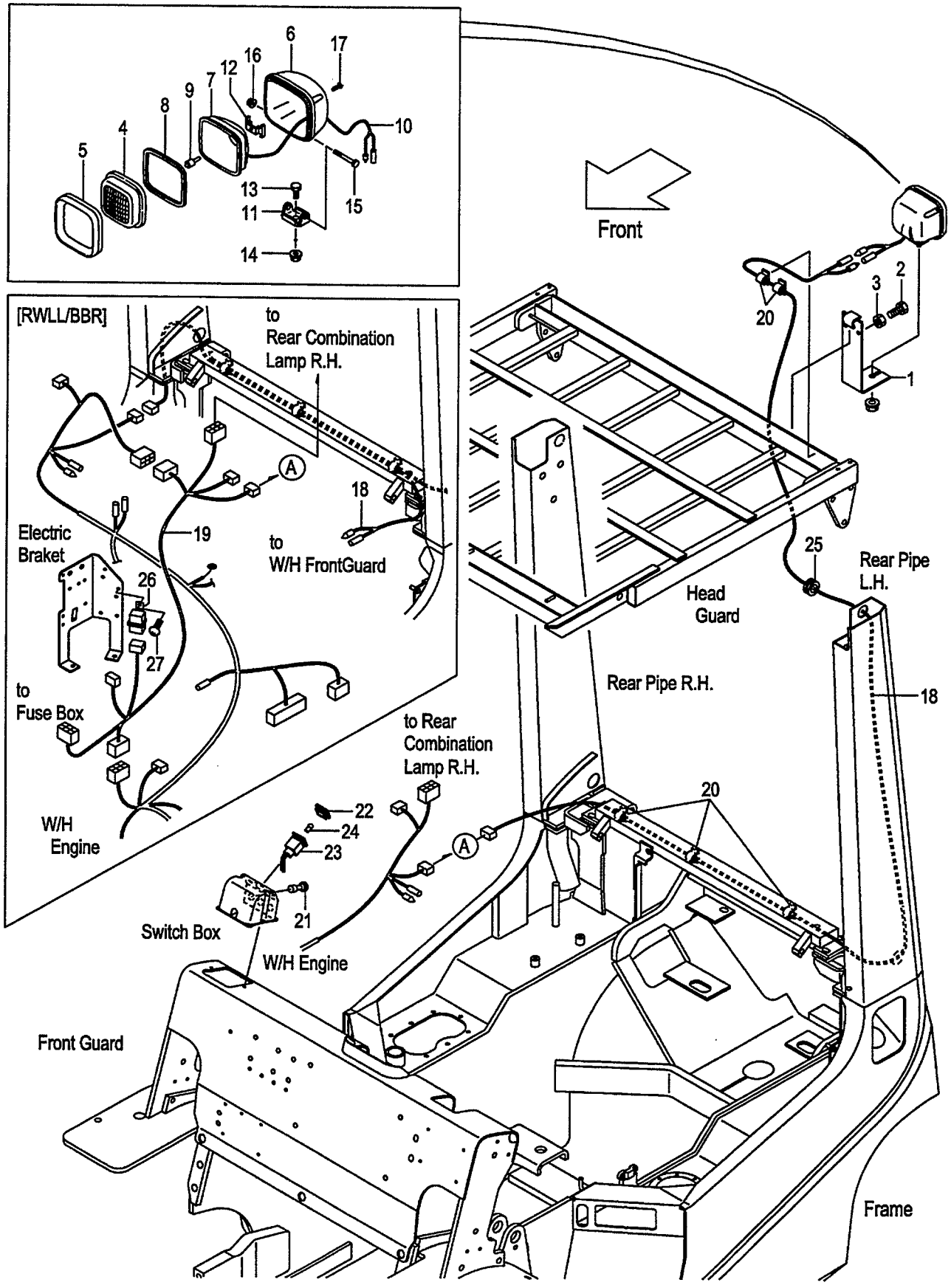

A:FD20C18 FD20T18 FD25C18 FD25T18
B:FD20C7 FD20T7 FD25C7 FD25T7 FD20W7 FD25W7

FIG.45
(F60224R0)

Item No	Part No.	Mark	Description		Req'd	Remarks : Serial No.
1	516G1-42151		BRACKET,REAR-LAMP	ﾌﾞﾗｹｯﾄ	1	[RWLL]
-	539A1-42201		BRACKET,REAR-LAMP	ﾌﾞﾗｹｯﾄ	1	[RWLL/AW061]
2	01100-08020		BOLT	ﾎﾞﾙﾄ	3	[RWLL]
3	01400-00008		NUT	ﾅｯﾄ	3	[RWLL]
A1	216G2-40602		LAMP-ASSY,HEAD	ﾍｯﾄﾞﾗﾝﾌﾟｱｯｾﾝ	1	[RWLL] INC.4-17
4	216G2-43502		LENS	ﾚﾝｽﾞ	1	[RWLL]
5	216G2-43631		RIM	ﾘﾑ	1	[RWLL]
6	NO PART NO.	#	HOUSING	ﾊｳｼﾞﾝｸﾞ	1	[RWLL]
7	NO PART NO.	#	REFLECTOR	ﾘﾌﾚｸﾀ	1	[RWLL]
8	216G2-43531		GASKET	ｶﾞｽｹｯﾄ	1	[RWLL]
9	216G2-43542		BULB,12V/55W	ﾊﾞﾙﾌﾞ	1	[RWLL]
10	216G2-43551		WIRE,LEAD	ﾜｲﾔ	1	[RWLL]
11	216G2-43562		BRACKET	ﾌﾞﾗｹｯﾄ	1	[RWLL]
12	216G2-43571		SPRING	ｽﾌﾟﾘﾝｸﾞ	1	[RWLL]
13	216G2-43582		BOLT	ﾎﾞﾙﾄ	1	[RWLL]
14	216G2-43592		NUT	ﾅｯﾄ	1	[RWLL]
15	216G2-43602		BOLT	ﾎﾞﾙﾄ	1	[RWLL]
16	216G2-43611		NUT	ﾅｯﾄ	1	[RWLL]
17	216G2-43622		SCREW	ｽｸﾘｭ	4	[RWLL]
18	516G1-42111		WIRE,LEAD	ﾜｲﾔ	1	[RWLL]
-	516G1-42111		WIRE,LEAD	ﾜｲﾔ	2	[RWLL/BBR]
19	539A8-92111		WIRE,LEAD	ﾜｲﾔ	1	[RWLL/BBR]
20	27732-42311		CLAMP,HARNESS	ｸﾗﾝﾌﾟ	5	[RWLL]
21	22672-42501		SWITCH,LAMP	ｽｲｯﾁ	1	[RWLL]
A2	522A1-42051		LAMP-ASSY,PILOT	ﾊﾟｲﾛｯﾄﾗﾝﾌﾟｱｯｾﾝ	1	[RWLL] INC.22-24
22	522A1-42061		LENS	ﾚﾝｽﾞ	1	[RWLL]
23	NO PART NO.	#	HOLDER	ﾎﾙﾀﾞ	1	[RWLL]
24	23302-42311		BULB,12V/3.4W	ﾊﾞﾙﾌﾞ	1	[RWLL]
25	22679-47301		GROMMET	ｸﾞﾛﾒｯﾄ	1	[RWLL]
26	26062-42881		RELAY,12V	ﾘﾚｰ	1	[RWLL/BBR]
27	214A2-42611		SCREW	ｽｸﾘｭ	1	[RWLL/BBR]

FIG.46 REAR WORKING LIGHT [RWL2]

(F60224S0) リヤーワーキングライト

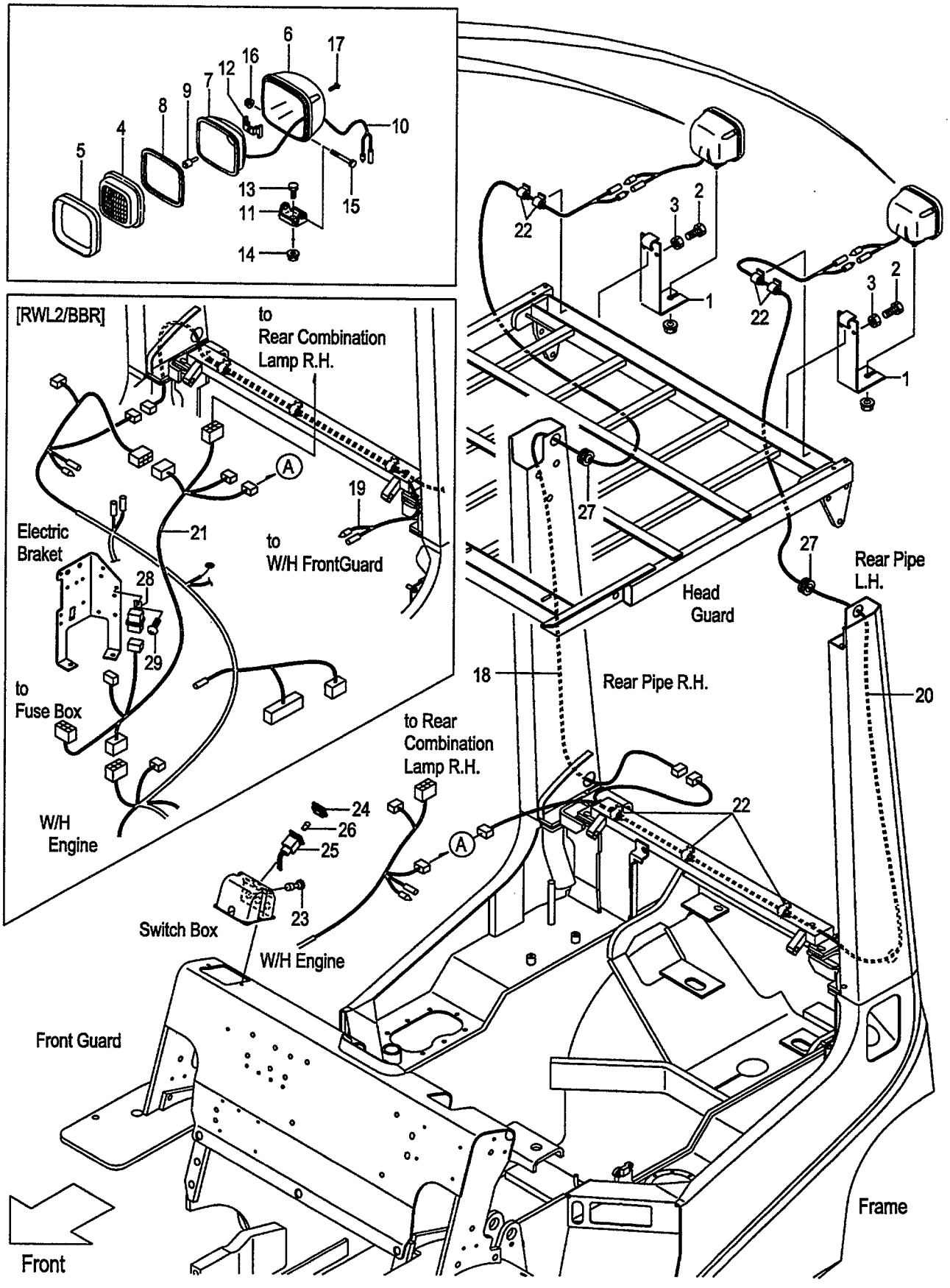

A:FD20C18 FD20T18 FD25C18 FD25T18
B:FD20C7 FD20T7 FD25C7 FD25T7 FD20W7 FD25W7

FIG.46
(F60224S0)

Item No	Part No.	Mark	Description		Req'd	Remarks : Serial No.
1	516G1-42151		BRACKET,REAR-LAMP	ﾌﾞﾗｹｯﾄ	2	[RWL2]
-	539A1-42201		BRACKET,REAR-LAMP	ﾌﾞﾗｹｯﾄ	2	[RWL2/AW061]
2	01100-08020		BOLT	ﾎﾞﾙﾄ	6	[RWL2]
3	01400-00008		NUT	ﾅｯﾄ	6	[RWL2]
A1	216G2-40602		LAMP-ASSY,HEAD	ﾍｯﾄﾞﾗﾝﾌﾟｱｯｾﾝ	2	[RWL2] INC.4-17
4	216G2-43502		LENS	ﾚﾝｽﾞ	2	[RWL2]
5	216G2-43631		RIM	ﾘﾑ	2	[RWL2]
6	NO PART NO.	#	HOUSING	ﾊｳｼﾞﾝｸﾞ	2	[RWL2]
7	NO PART NO.	#	REFLECTOR	ﾘﾌﾚｸﾀ	2	[RWL2]
8	216G2-43531		GASKET	ｶﾞｽｹｯﾄ	2	[RWL2]
9	216G2-43542		BULB,12V/55W	ﾊﾞﾙﾌﾞ	2	[RWL2]
10	216G2-43551		WIRE,LEAD	ﾜｲﾔ	2	[RWL2]
11	216G2-43562		BRACKET	ﾌﾞﾗｹｯﾄ	2	[RWL2]
12	216G2-43571		SPRING	ｽﾌﾟﾘﾝｸﾞ	2	[RWL2]
13	216G2-43582		BOLT	ﾎﾞﾙﾄ	2	[RWL2]
14	216G2-43592		NUT	ﾅｯﾄ	2	[RWL2]
15	216G2-43602		BOLT	ﾎﾞﾙﾄ	2	[RWL2]
16	216G2-43611		NUT	ﾅｯﾄ	2	[RWL2]
17	216G2-43622		SCREW	ｽｸﾘｭ	8	[RWL2]
18	516G1-42101		WIRE,LEAD	ﾜｲﾔ	1	[RWL2]
19	516G1-42111		WIRE,LEAD	ﾜｲﾔ	1	[RWL2/BBR]
20	516G1-42121		WIRE,LEAD	ﾜｲﾔ	1	[RWL2]
21	539A8-92111		WIRE,LEAD	ﾜｲﾔ	1	[RWL2/BBR]
22	27732-42311		CLAMP,HARNESS	ｸﾗﾝﾌﾟ	7	[RWL2]
23	22672-42501		SWITCH,LAMP	ｽｲｯﾁ	1	[RWL2]
A2	522A1-42051		LAMP-ASSY,PILOT	ﾊﾟｲﾛｯﾄﾗﾝﾌﾟｱｯｾﾝ	1	[RWL2] INC.24-26
24	522A1-42061		LENS	ﾚﾝｽﾞ	1	[RWL2]
25	NO PART NO.	#	HOLDER	ﾎﾙﾀﾞ	1	[RWL2]
26	23302-42311		BULB,12V/3.4W	ﾊﾞﾙﾌﾞ	1	[RWL2]
27	22679-47301		GROMMET	ｸﾞﾛﾒｯﾄ	2	[RWL2]
28	26062-42881		RELAY,12V	ﾘﾚｰ	1	[RWL2/BBR]
29	214A2-42611		SCREW	ｽｸﾘｭ	1	[RWL2/BBR]

FIG.47 REVOLVING LIGHT [RLY][RLR]

(F60224T0) ﾘﾎﾞﾙﾋﾞﾝｸﾞﾗｲﾄ

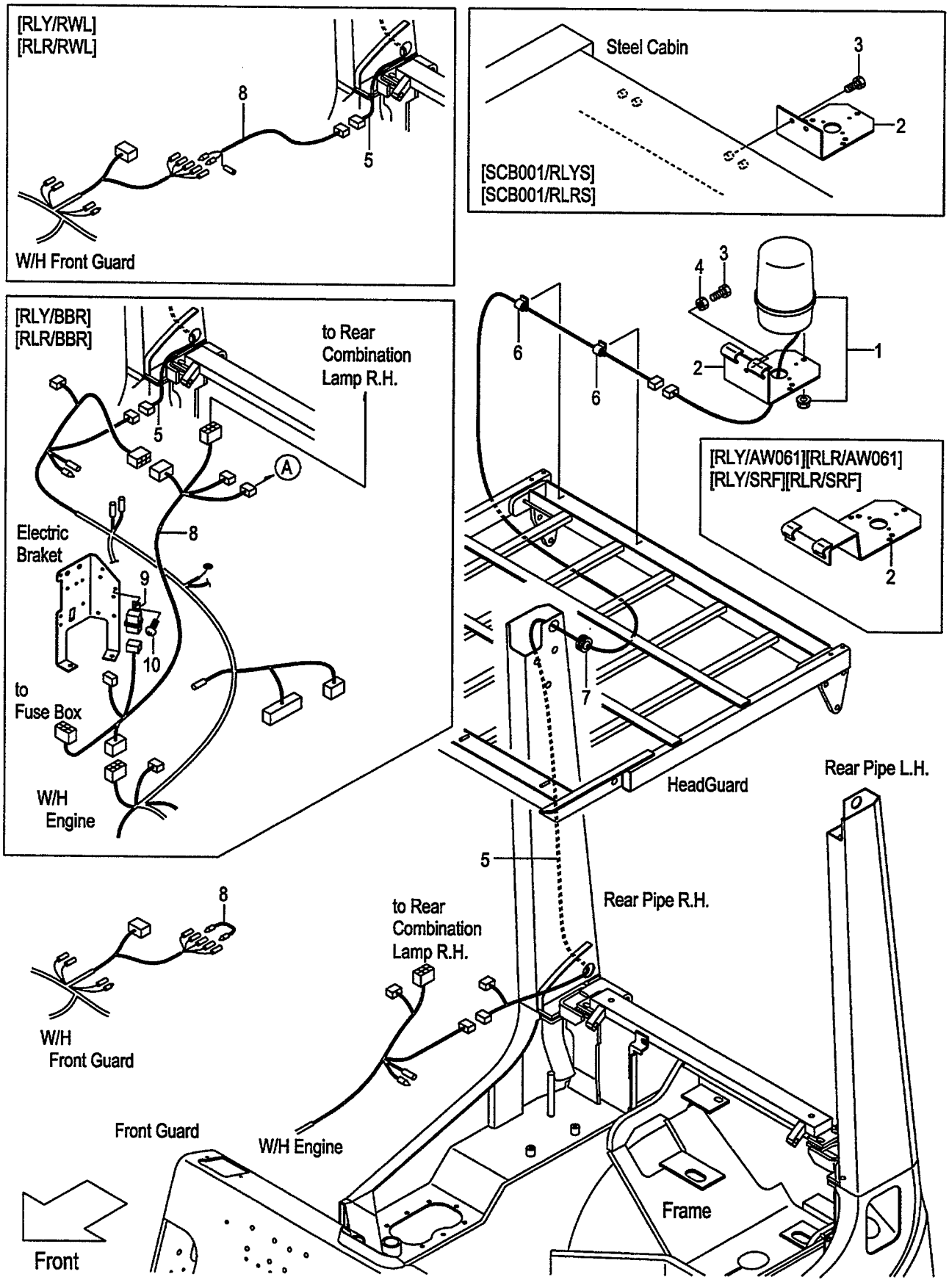

A:FD20C18 FD20T18 FD25C18 FD25T18
B:FD20C7 FD20T7 FD25C7 FD25T7 FD20W7 FD25W7

Item No	Part No.	Mark	Description		Req'd	Remarks : Serial No.
1	514A1-41001		LIGHT,REVOLVING	ﾗｲﾄ	1	[RLYS]
-	514A1-41011		LIGHT,REVOLVING	ﾗｲﾄ	1	[RLRS]
-	514A1-41021		LIGHT,REVOLVING	ﾗｲﾄ	1	[RLYM]
-	514A1-41031		LIGHT,REVOLVING	ﾗｲﾄ	1	[RLRM]
2	529F1-42251		BRACKET,REVOLVING	ﾌﾞﾗｹｯﾄ	1	[RLY][RLR]
-	529F1-42201		BRACKET,REVOLVING	ﾌﾞﾗｹｯﾄ	1	[RLY/BKTL][RLR/BKTL]
-	539A8-92251		BRACKET,REVOLVING	ﾌﾞﾗｹｯﾄ	1	[RLY/AW061][RLR/AW061] [RLY/SRF][RLR/SRF]
-	535C8-92051		BRACKET,REVOLVING	ﾌﾞﾗｹｯﾄ	1	B [SCB001/RLYS][SCB001/RLRS]
3	01100-08020		BOLT	ﾎﾞﾙﾄ	3	[RLY][RLR]
-	01185-08020		BOLT	ﾎﾞﾙﾄ	2	B [SCB001/RLYS][SCB001/RLRS]
4	01400-00008		NUT	ﾅｯﾄ	3	[RLY][RLR] (WITHOUT SCB001/RLYS, SCB001/RLRS)
5	516G8-92001		WIRE,LEAD	ﾜｲﾔ	1	[RLY][RLR]
-	514A1-42191		WIRE,LEAD	ﾜｲﾔ	1	[RLY/BBR][RLR/BBR][RLY/RWL] [RLR/RWL]
6	27732-42311		CLAMP,HARNESS	ｸﾗﾝﾌﾟ	2	[RLY][RLR]
7	22679-47301		GROMMET	ｸﾞﾛﾒｯﾄ	1	[RLY][RLR]
8	516G1-42211		WIRE,LEAD	ﾜｲﾔ	1	[RLY][RLR]
-	539A8-92111		WIRE,LEAD	ﾜｲﾔ	1	[RLY/BBR][RLR/BBR]
-	514A1-42041		WIRE,LEAD	ﾜｲﾔ	1	[RLY/RWL][RLR/RWL]
9	26062-42881		RELAY,12V	ﾘﾚｰ	1	[RLY/BBR][RLR/BBR]
10	214A2-42611		SCREW	ｽｸﾘｭ	1	[RLY/BBR][RLR/BBR]

FIG.48 SPOT LIGHT [SPL]

(F6022610) スポットライト

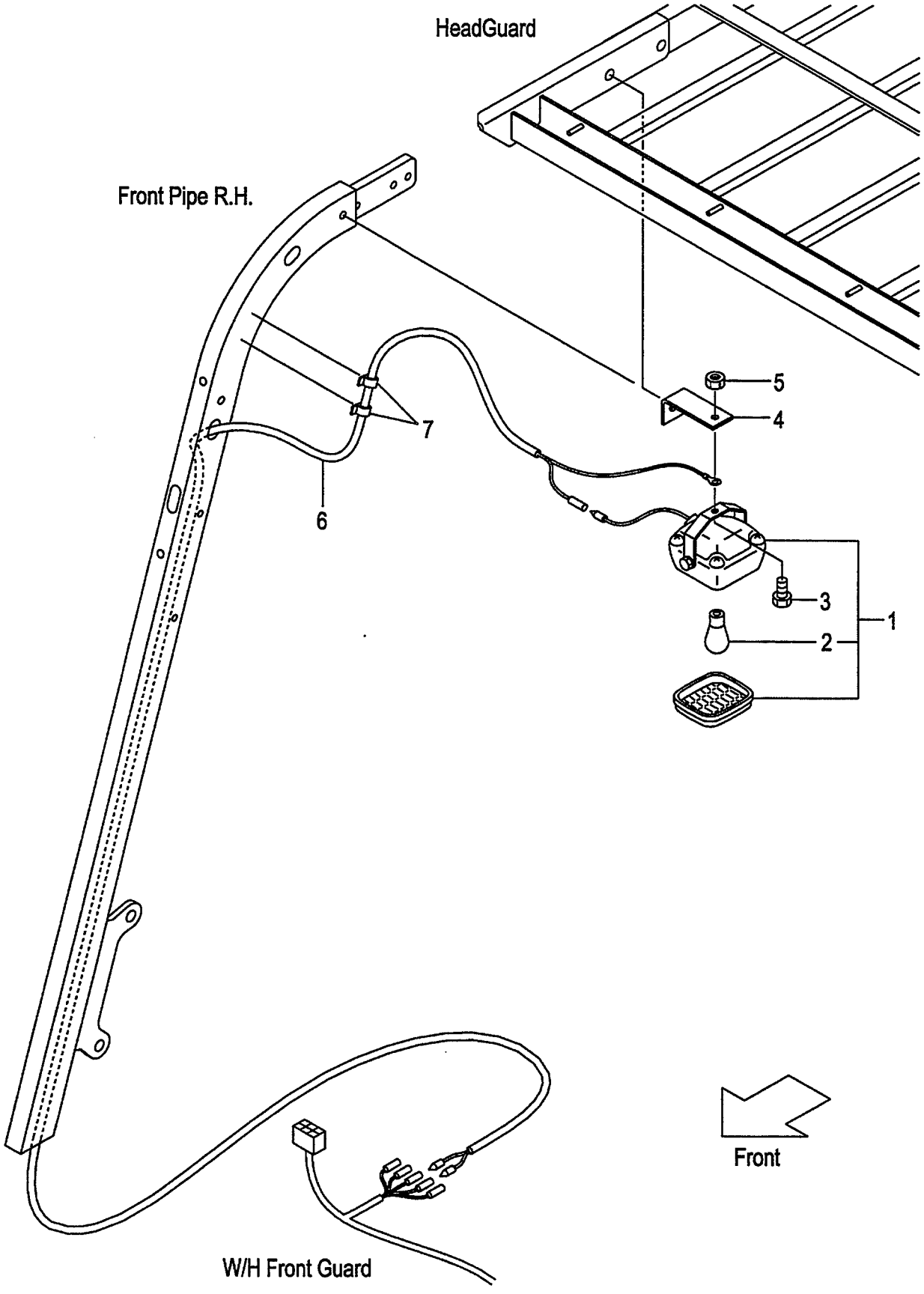

FIG.48
(F6022610)

A:FD20C18 FD20T18 FD25C18 FD25T18
B:FD20C7 FD20T7 FD25C7 FD25T7 FD20W7 FD25W7

Item No	Part No.	Mark	Description		Req'd	Remarks : Serial No.
1	516G9-10101		LAMP	ﾗﾝﾌﾟ	1	[SPL] INC.2
2	516G9-12011		BULB,12V/18.2W	ﾊﾞﾙﾌﾞ	1	[SPL]
3	01185-08016		BOLT	ﾎﾞﾙﾄ	1	[SPL]
4	539A9-02001		BRACKET,SPOT-LAMP	ﾌﾞﾗｹｯﾄ	1	[SPL]
5	01400-00008		NUT	ﾅｯﾄ	1	[SPL]
6	539A9-02011		WIRE-HARNESS,SPOT-L.	ﾜｲﾔﾊｰﾈｽ	1	[SPL]
7	27732-42311		CLAMP,HARNESS	ｸﾗﾝﾌﾟ	2	[SPL]

FIG.49 HEATER UNIT [HR]

(F60224U0) ヒータユニット

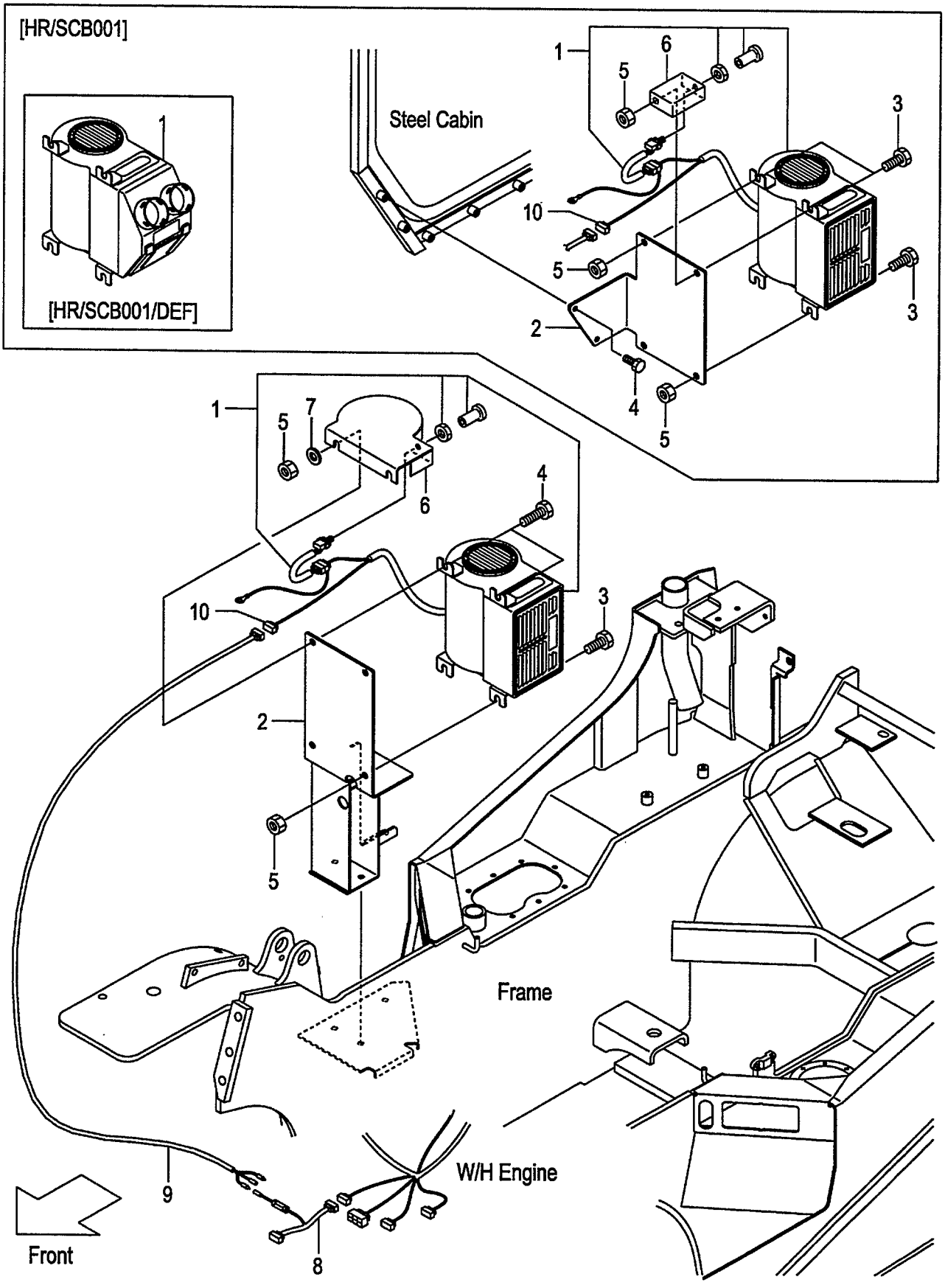

A:FD20C18 FD20T18 FD25C18 FD25T18
B:FD20C7 FD20T7 FD25C7 FD25T7 FD20W7 FD25W7

FIG.49
(F60224U0)

Item No	Part No.	Mark	Description		Req'd	Remarks : Serial No.
1	514T7-20201		HEATER,CAR	ヒータ	1	[HR]
-	556C7-22001		HEATER,CAR	ヒータ	1	B [HR/SCB001/DEF]
2	539A7-22513		BRACKET,HEATER	ブラケット	1	[HR]
-	539A7-22211		BRACKET,HEATER	ブラケット	1	B [HR/SCB001]
3	01186-10020		BOLT	ボルト	2	[HR]
-	01186-10020		BOLT	ボルト	4	B [HR/SCB001]
4	01186-10025		BOLT	ボルト	2	[HR]
-	01186-08020		BOLT	ボルト	2	B [HR/SCB001]
5	01400-00010		NUT	ナット	4	[HR]
6	539A7-22611		PLATE,TOP,HR	プレート	1	[HR]
-	539A7-22061		BRACKET,HEATER-SW.	ブラケット	1	B [HR/SCB001]
7	02000-00010		WASHER	ワッシャ	2	[HR](WITHOUT HR/SCB001)
8	514T7-22061		WIRE,LEAD	ワイヤ	1	[HR]
9	514A1-42041		WIRE,LEAD	ワイヤ	1	[HR]
10	534A7-22101		CONNECTOR,MALE	コネクタ	1	[HR]
11	27042-43501	+	TERMINAL	ターミナル	2	[HR]

FIG.50 HEATER VALVE & ELBOW [HR]

(F60224X0) ﾋｰﾀﾊﾞﾙﾌﾞ&ｴﾙﾎﾞ

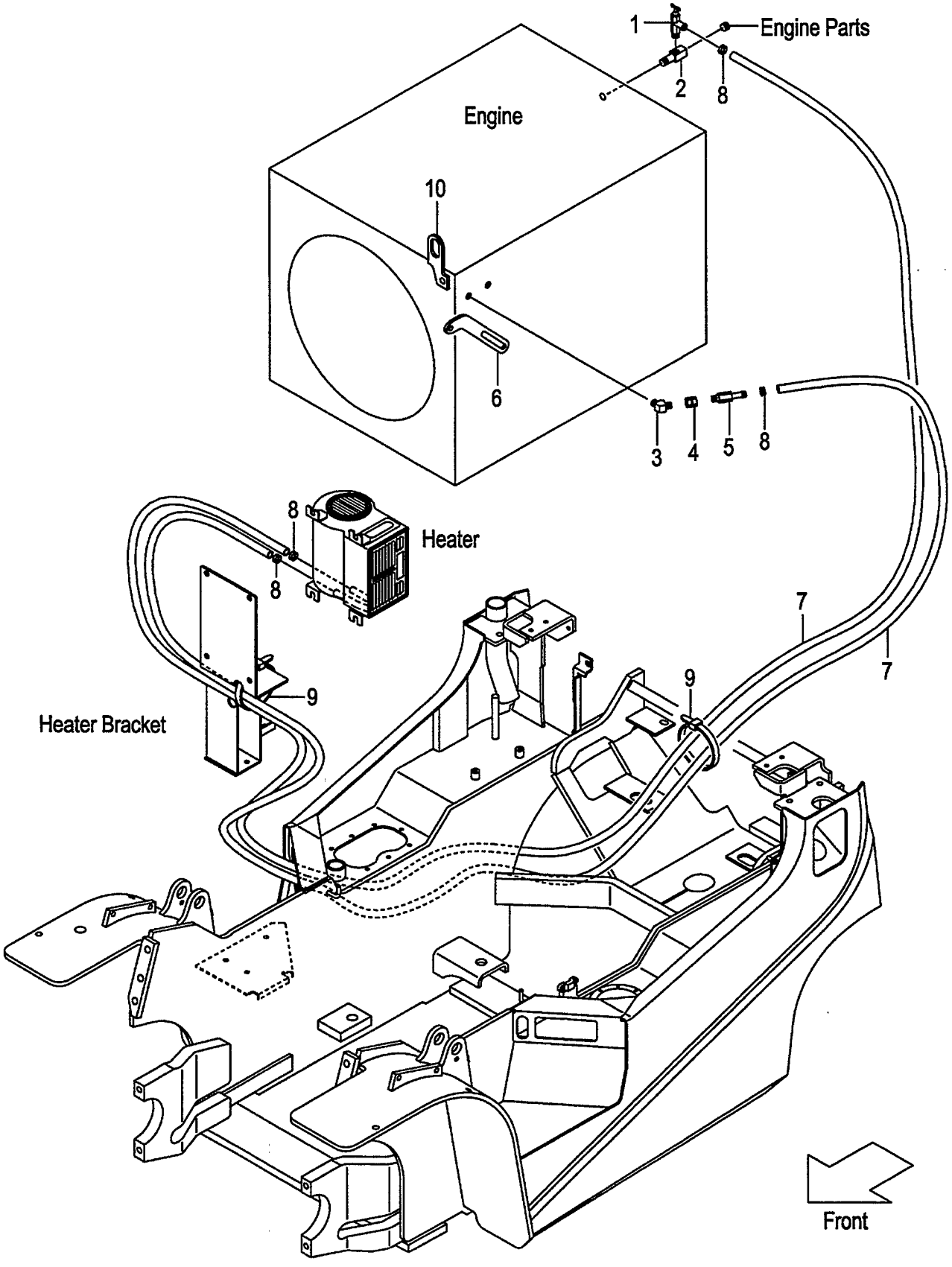

FIG.50
(F60224X0)

A:FD20C18 FD20T18 FD25C18 FD25T18

Item No	Part No.	Mark	Description		Req'd	Remarks : Serial No.
1	56110-63521		VALVE,WATER	ﾊﾞﾙﾌﾞ	1	[HR]
2	55597-22111		ELBOW	ｴﾙﾎﾞ	1	[HR]
3	53130-12091		ELBOW	ｴﾙﾎﾞ	1	[HR]
4	04138-00303		UNION	ﾕﾆｵﾝ	1	[HR]
5	529F7-22001		NIPPLE	ﾆｯﾌﾟﾙ	1	[HR]
6	520F7-22001		PLATE,ADJUST		1	[HR]
7	522A7-22011		HOSE,WATER	ﾎｰｽ	2	[HR]
8	04911-00022		CLIP	ｸﾘｯﾌﾟ	4	[HR]
9	04913-11200		BAND	ﾊﾞﾝﾄﾞ	10	[HR]
10	539A7-22301		HANGER,E/G	ﾊﾝｶﾞ	1	[HR]

FIG.51 HEATER VALVE & ELBOW [HR]

(F60224Y0) ﾋｰﾀﾊﾞﾙﾌﾞ&ｴﾙﾎﾞ

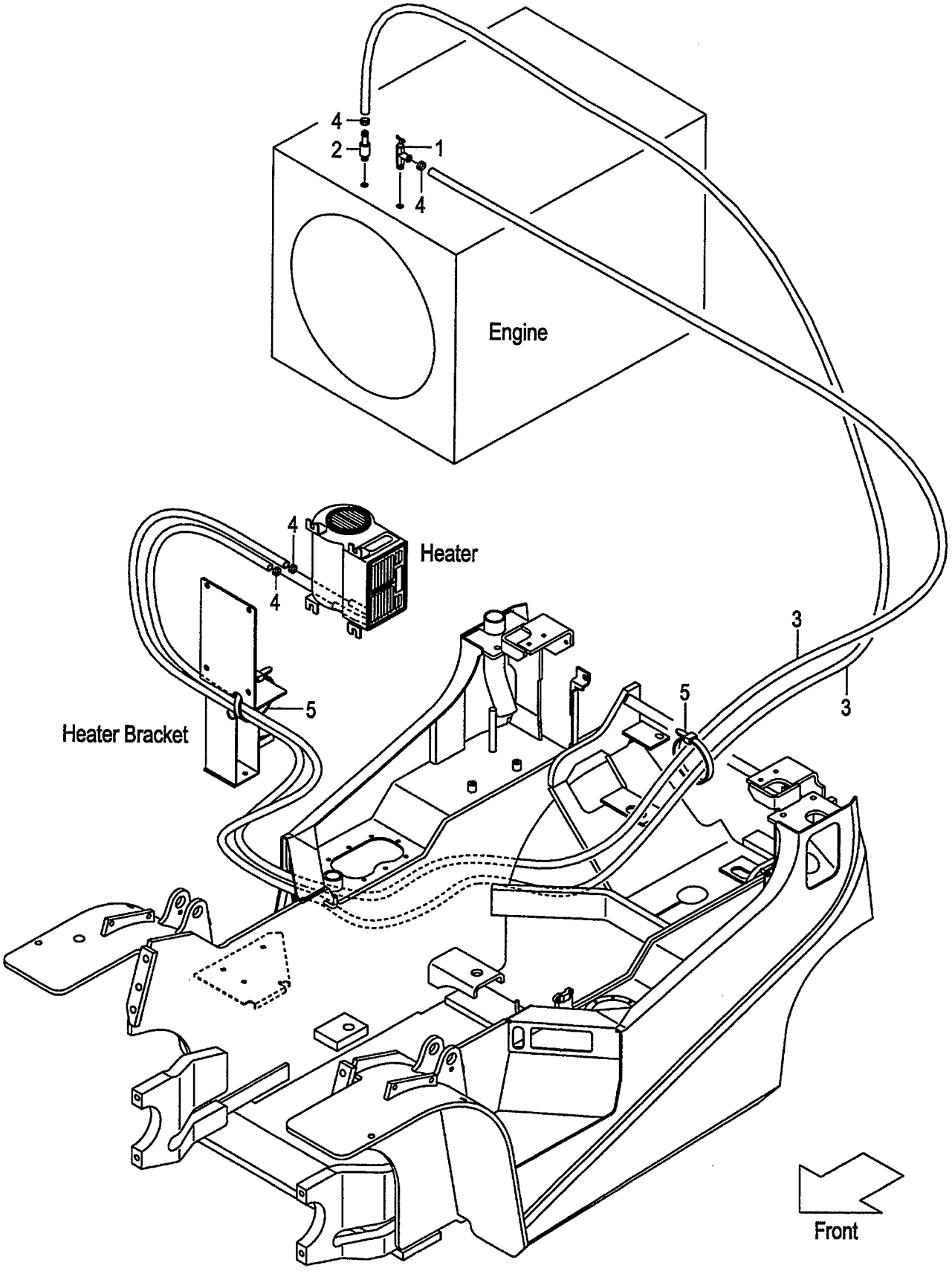

FIG.51
(F60224Y0)

A:FD20C7 FD20T7 FD25C7 FD25T7 FD20W7 FD25W7

Item No	Part No.	Mark	Description		Req'd	Remarks : Serial No.
1	56110-63521		VALVE,WATER	ﾊﾞﾙﾌﾞ	1	[HR]
2	529F7-22001		NIPPLE	ﾆｯﾌﾟﾙ	1	[HR]
3	522A7-22011		HOSE,WATER	ﾎｰｽ	2	[HR]
4	04911-00022		CLIP	ｸﾘｯﾌﾟ	4	[HR]
5	04913-11200		BAND	ﾊﾞﾝﾄﾞ	10	[HR]

FIG.52 FAN [FAN]

(F6022620) ファン

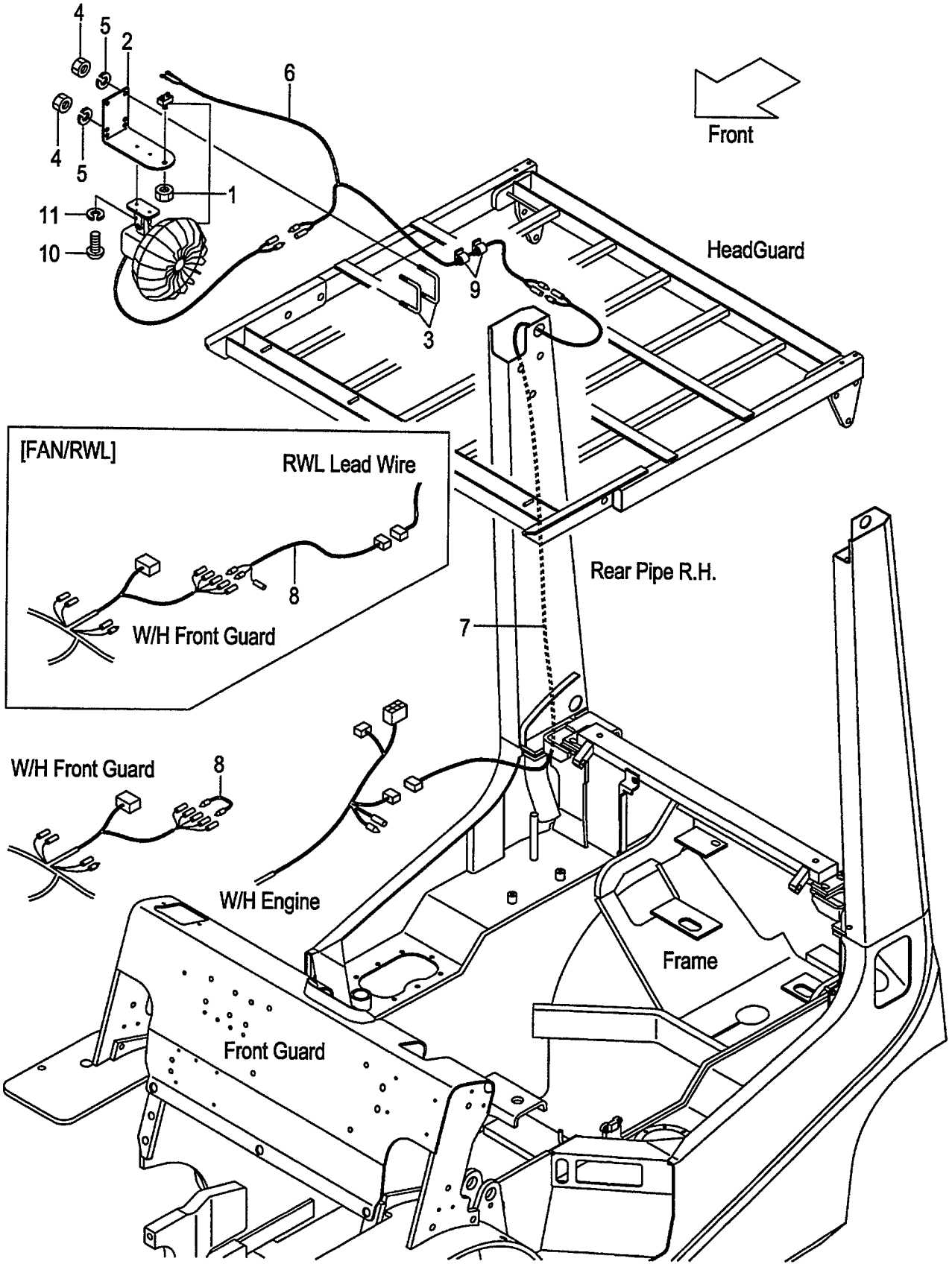

A:FD20C18 FD20T18 FD25C18 FD25T18
B:FD20C7 FD20T7 FD25C7 FD25T7 FD20W7 FD25W7

FIG.52
(F6022620)

Item No	Part No.	Mark	Description		Req'd	Remarks : Serial No.
1	514A5-32341		FAN,CAR	ﾌｧﾝ	1	[FAN]
-	514A5-32341		FAN,CAR	ﾌｧﾝ	1	B [FAN/SCB001]
2	539A8-22101		BRACKET,FAN	ﾌﾞﾗｹｯﾄ	1	[FAN](WITHOUT FAN/SCB001)
3	55812-42011		U-BOLT	Uﾎﾞﾙﾄ	2	[FAN](WITHOUT FAN/SCB001)
4	01400-00008		NUT	ﾅｯﾄ	4	[FAN](WITHOUT FAN/SCB001)
5	02010-00008		WASHER	ﾜｯｼｬ	4	[FAN](WITHOUT FAN/SCB001)
6	539A8-22151		WIRE-HARNESS,FAN	ﾜｲﾔﾊｰﾈｽ	1	[FAN](WITHOUT FAN/SCB001)
7	516G1-42101		WIRE,LEAD	ﾜｲﾔ	1	[FAN](WITHOUT FAN/SCB001)
8	516G1-42211		WIRE,LEAD	ﾜｲﾔ	1	[FAN](WITHOUT FAN/SCB001)
-	514A1-42041		WIRE,LEAD	ﾜｲﾔ	1	[FAN/RWL]
9	27732-42311		CLAMP,HARNESS	ｸﾗﾝﾌﾟ	4	[FAN](WITHOUT FAN/SCB001)
10	01030-04014		SCREW	ｽｸﾘｭ	2	[FAN]
-	01044-04014		SCREW	ｽｸﾘｭ	2	B [FAN/SCB001]
11	02010-00004		WASHER	ﾜｯｼｬ	2	[FAN](WITHOUT FAN/SCB001)
12	229F6-42201	+	SEAL,PANEL-COVER,A	ｼｰﾙ	3	B [FAN/SCB001]
13	229F6-42211	+	SEAL,PANEL-COVER,B	ｼｰﾙ	2	B [FAN/SCB001]
14	534A5-33001	+	GROMMET	ｸﾞﾛﾒｯﾄ	2	B [FAN/SCB001]

FIG.53 AMMETER [AM]

(F6022630) アンメータ

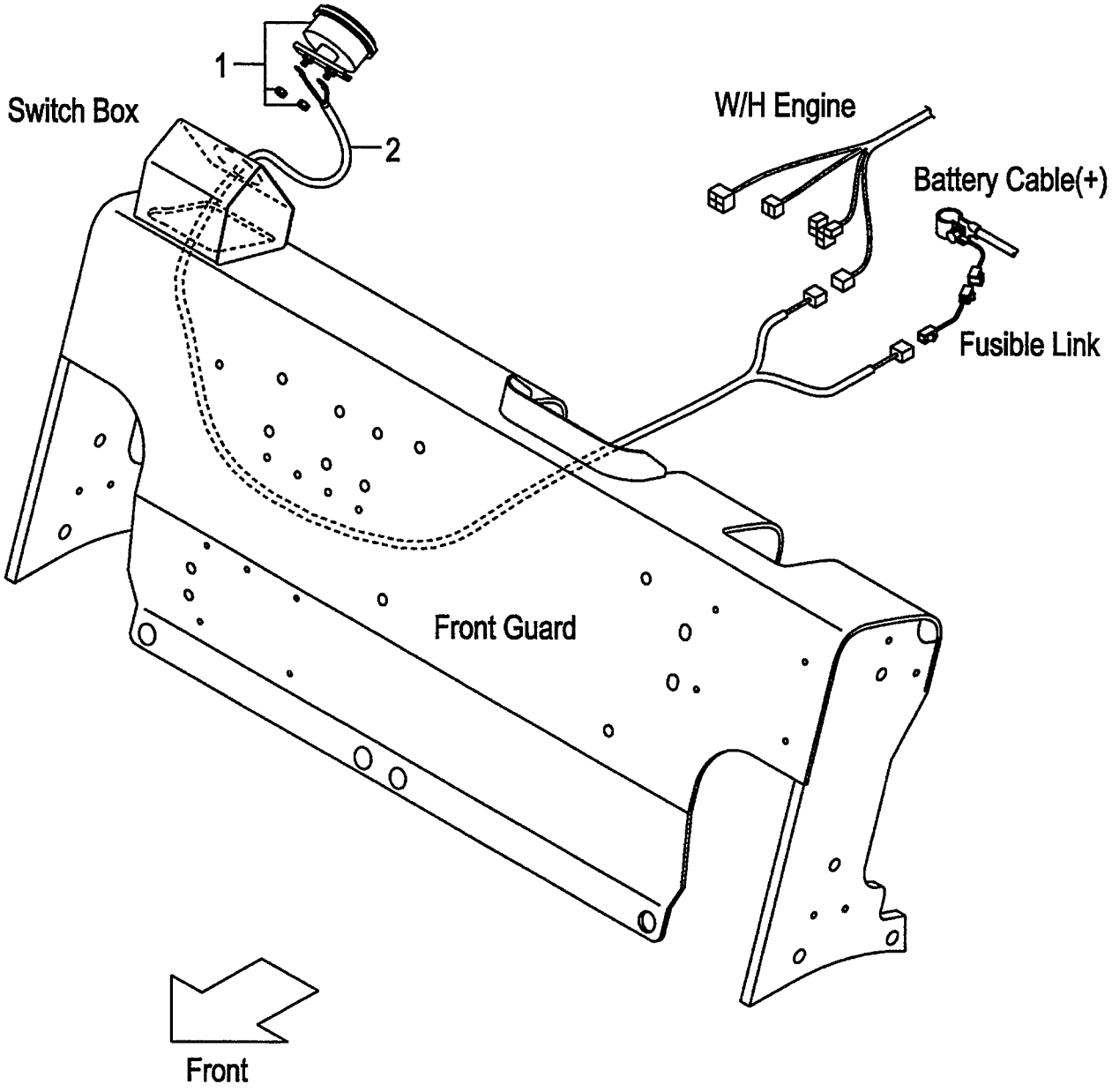

FIG.53
(F6022630)

A:FD20C18 FD20T18 FD25C18 FD25T18
B:FD20C7 FD20T7 FD25C7 FD25T7 FD20W7 FD25W7

Item No	Part No.	Mark	Description	Req'd	Remarks : Serial No.
1	3956323		AMMETER,50A アンメータ	1	[AM]
2	516G6-12051		WIRE,LEAD,AMMETER ワイヤ	1	[AM]

FIG.54 SPEED METER [SM]

(F6022640) ｽﾋﾟｰﾄﾞﾒｰﾀ

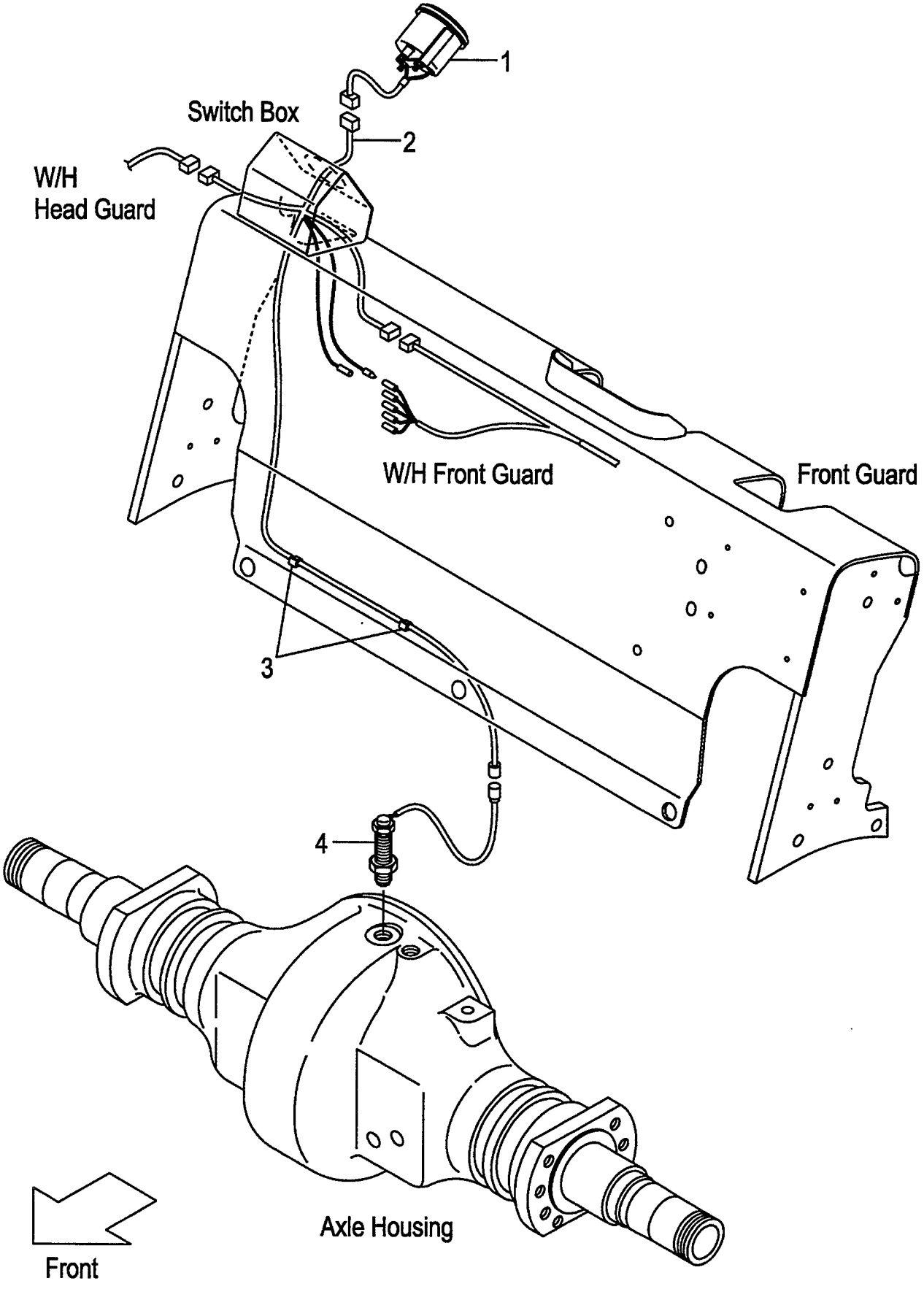

FIG.54
(F6022640)

A:FD20C18 FD20T18 FD25C18 FD25T18
B:FD20C7 FD20T7 FD25C7 FD25T7 FD20W7 FD25W7

Item No	Part No.	Mark	Description		Req'd	Remarks : Serial No.
1	534A7-50101		METER,SPEED	メータ	1	[SM]
2	516G7-50301		WIRE-HARNESS,SM	ワイヤハーネス	1	[SM]
3	27732-42311		CLAMP,HARNESS	クランプ	2	[SM]
4	16402-54331		SENSOR	センサ	1	[SM]

FIG.55 TORQUE CONVERTER THERMOMETER [TTM]

(F6022650) トルクコンバータサーモメータ

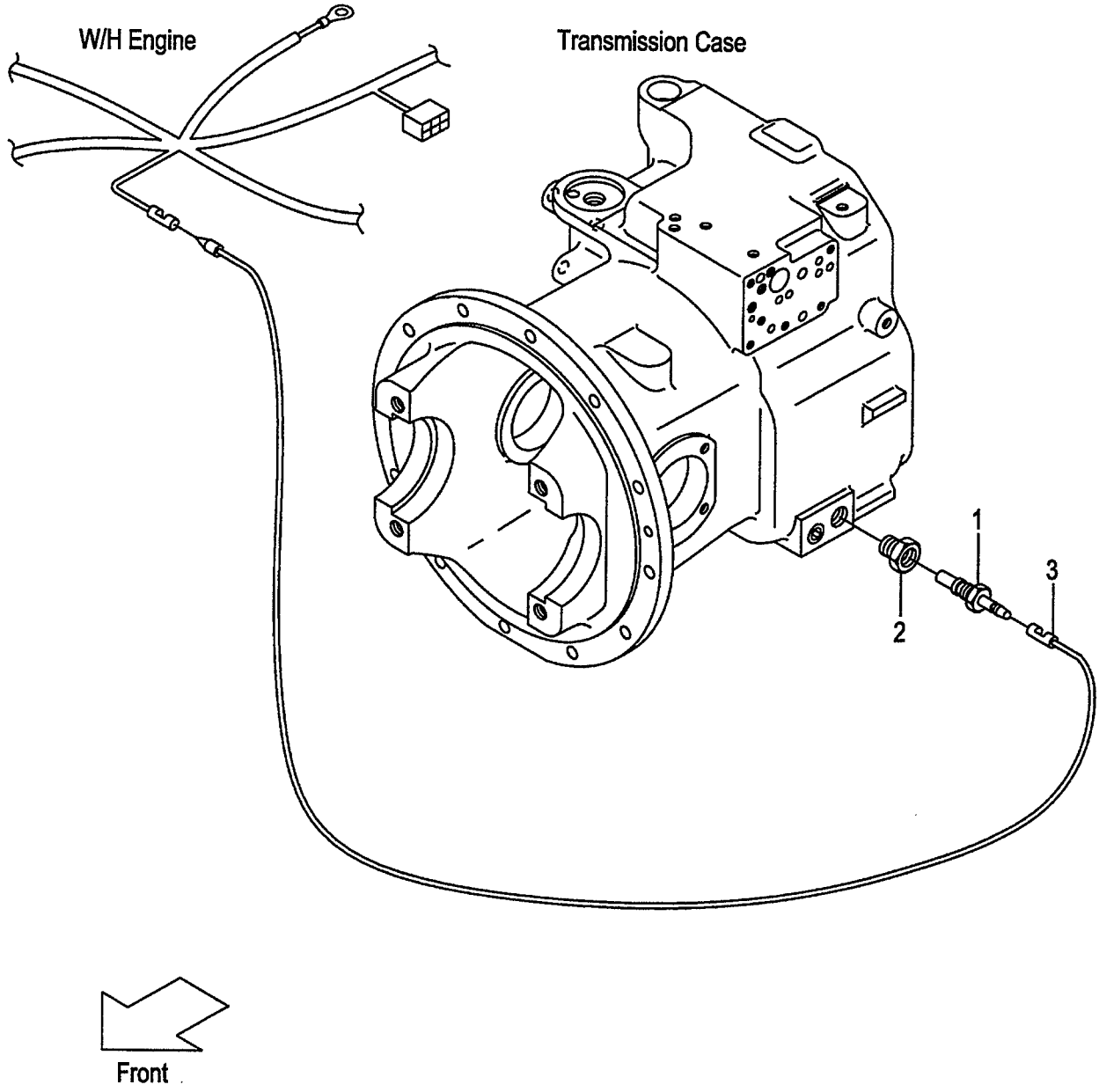

A:FD20T18 FD25T18
B:FD20T7 FD25T7

FIG.55
(F6022650)

Item No	Part No.	Mark	Description	Req'd	Remarks : Serial No.
1	23652-44001		UNIT,SENDING ﾕﾆｯﾄ	1	[TTM]
2	521A2-42061		ADAPTER,THERMO-SW. ｱﾀﾞﾌﾟﾀ	1	[TTM]
3	214A2-42371		WIRE,LEAD ﾜｲﾔ	1	[TTM]

FIG.56 TORQUE CONVERTER PRESSURE METER [TPM]

(F6022660) トルクコンバータプレッシャメータ

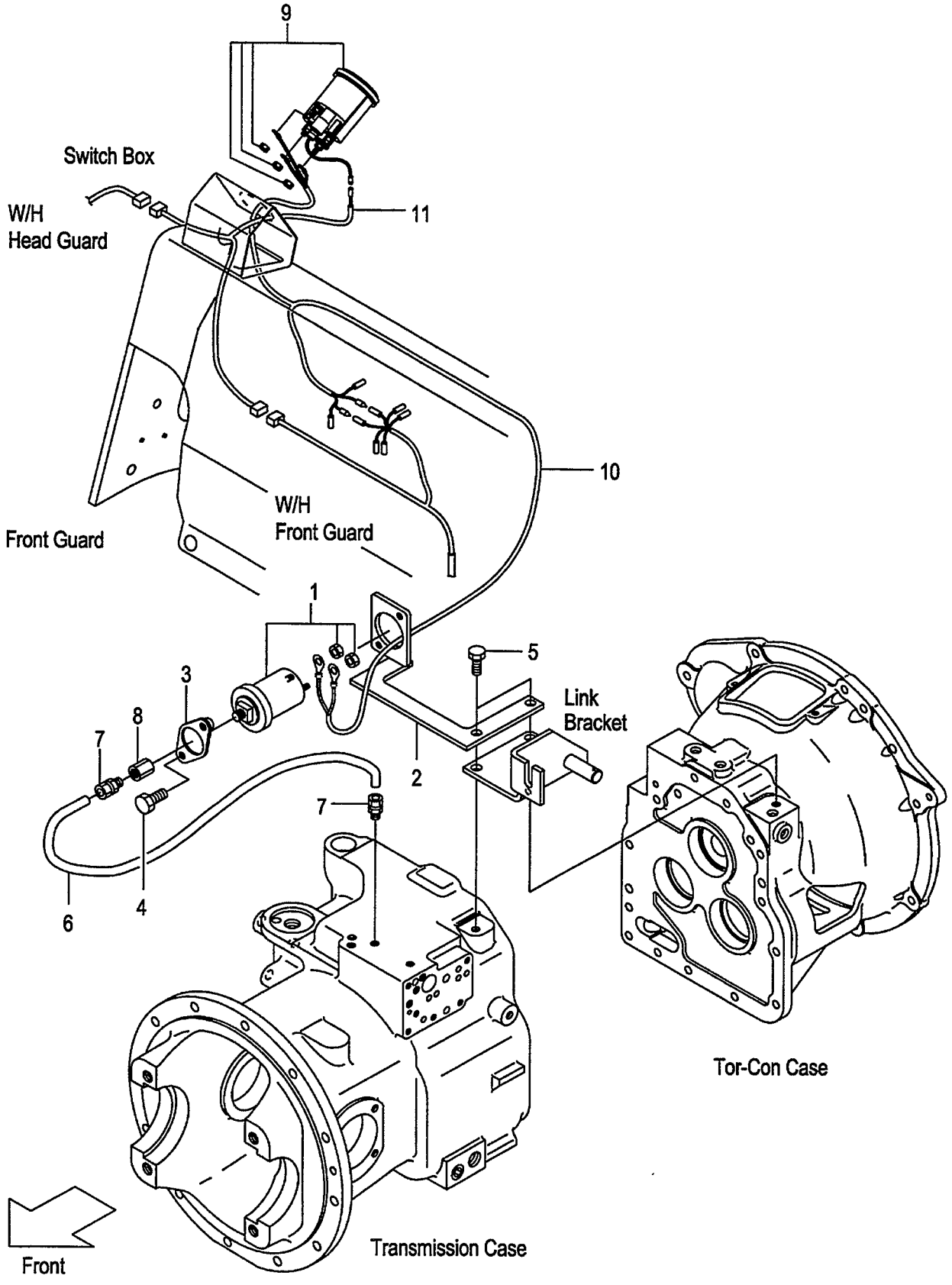

A:FD20T18 FD25T18
B:FD20T7 FD25T7

FIG.56
(F6022660)

Item No	Part No.	Mark	Description		Req'd	Remarks : Serial No.
1	516G6-92001		SENSOR,PRESS.GAUGE	ｾﾝｻ	1	[TPM]
2	539B6-92111		BRACKET,SENSOR	ﾌﾞﾗｹｯﾄ	1	[TPM]
3	516G6-92151		COVER,SENSOR	ｶﾊﾞｰ	1	[TPM]
4	01186-08025		BOLT	ﾎﾞﾙﾄ	2	[TPM]
5	01184-10025		BOLT	ﾎﾞﾙﾄ	2	[TPM]
6	539B6-92211		PIPE,CAPPER	ﾊﾟｲﾌﾟ	1	[TPM]
7	516G6-92011		JOINT	ｼﾞｮｲﾝﾄ	2	[TPM]
8	516G6-92031		ADAPTER	ｱﾀﾞﾌﾟﾀ	1	[TPM]
9	516G6-92022		GAUGE,PRESSURE	ｹﾞｰｼﾞ	1	[TPM]
10	516G6-92201		WIRE-HARNESS,TPM	ﾜｲﾔﾊｰﾈｽ	1	[TPM]
11	516G6-92211		WIRE-HARNESS,TPM	ﾜｲﾔﾊｰﾈｽ	1	[TPM]

FIG.57 SPEED DETECTOR UNIT [SAS]

(F6022670) ｽﾋﾟｰﾄﾞﾃﾞｨﾃｸﾀﾕﾆｯﾄ

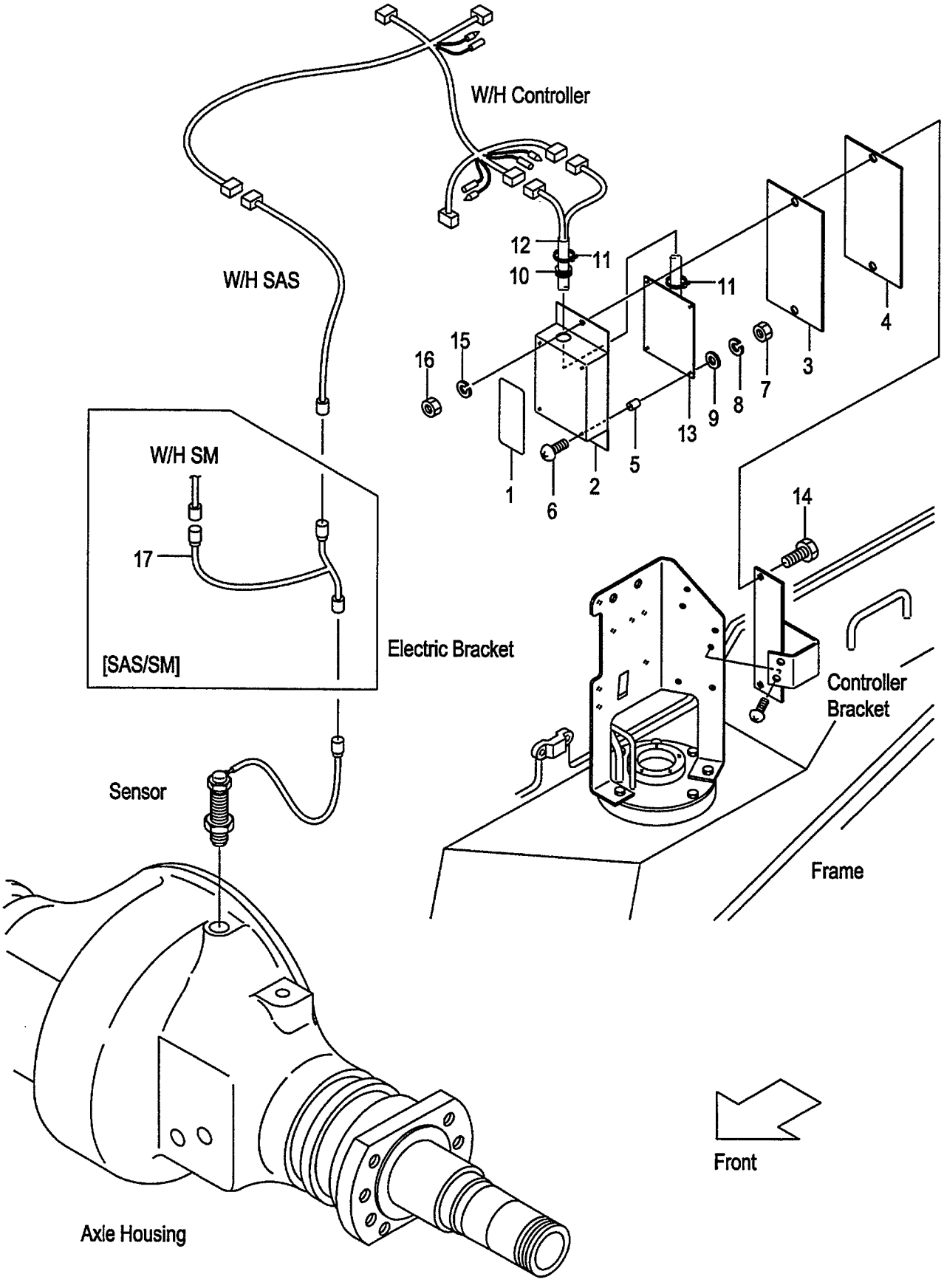

A:FD20C18 FD20T18 FD25C18 FD25T18
B:FD20C7 FD20T7 FD25C7 FD25T7 FD20W7 FD25W7

FIG.57
(F6022670)

Item No	Part No.	Mark	Description		Req'd	Remarks : Serial No.
A1	534A7-50301		UNIT-ASSY,SPEED-DETECTOR	スピードディテクタユニットアッセン	1	[SASB05][SASR05][SASC05] INC.1-16
-	534A7-50401		UNIT-ASSY,SPEED-DETECTOR	スピードディテクタユニットアッセン	1	[SASB10][SASR10][SASC10] INC.1-16
-	534A7-50501		UNIT-ASSY,SPEED-DETECTOR	スピードディテクタユニットアッセン	1	[SASB15][SASR15][SASC15] INC.1-16
1	539A7-52311		PLATE,NAME	プレート	1	[SASB05][SASR05][SASC05]
-	539A7-52411		PLATE,NAME	プレート	1	[SASB10][SASR10][SASC10]
-	539A7-52511		PLATE,NAME	プレート	1	[SASB15][SASR15][SASC15]
2	55792-52601		CASE	ケース	1	[SASB05&10&15][SASR05&10&15] [SASC05&10&15]
3	55792-52611		SEAT,SPONG	シート	1	[SASB05&10&15][SASR05&10&15] [SASC05&10&15]
4	55792-52621		PLATE	プレート	1	[SASB05&10&15][SASR05&10&15] [SASC05&10&15]
5	27042-64311		SPACER	スペーサ	4	[SASB05&10&15][SASR05&10&15] [SASC05&10&15]
6	01030-04020		SCREW	スクリュ	4	[SASB05&10&15][SASR05&10&15] [SASC05&10&15]
7	01400-00004		NUT	ナット	4	[SASB05&10&15][SASR05&10&15] [SASC05&10&15]
8	02010-00004		WASHER	ワッシャ	4	[SASB05&10&15][SASR05&10&15] [SASC05&10&15]
9	02000-00004		WASHER	ワッシャ	4	[SASB05&10&15][SASR05&10&15] [SASC05&10&15]
10	205A2-63311		GROMMET	グロメット	1	[SASB05&10&15][SASR05&10&15] [SASC05&10&15]
11	04913-10200		BAND	バンド	2	[SASB05&10&15][SASR05&10&15] [SASC05&10&15]
12	55792-52641		WIRE-HARNESS,ATC	ワイヤハーネス	1	[SASB05&10&15][SASR05&10&15] [SASC05&10&15]
13	534A7-52301		BOARD,PRINTED	ボード	1	[SASB05][SASR05][SASC05]
-	534A7-52401		BOARD,PRINTED	ボード	1	[SASB10][SASR10][SASC10]
-	534A7-52501		BOARD,PRINTED	ボード	1	[SASB15][SASR15][SASC15]
14	01100-06020		BOLT	ボルト	2	[SASB05&10&15][SASR05&10&15] [SASC05&10&15]
15	02010-00006		WASHER	ワッシャ	2	[SASB05&10&15][SASR05&10&15] [SASC05&10&15]
16	01400-00006		NUT	ナット	2	[SASB05&10&15][SASR05&10&15] [SASC05&10&15]
17	539A7-52041		WIRE-HARNESS,SAS/SM	ワイヤハーネス	1	[SAS/SM]

FIG.58 SPEED ALARM SYSTEM [SASB]

(F6022680) スピードアラームシステム

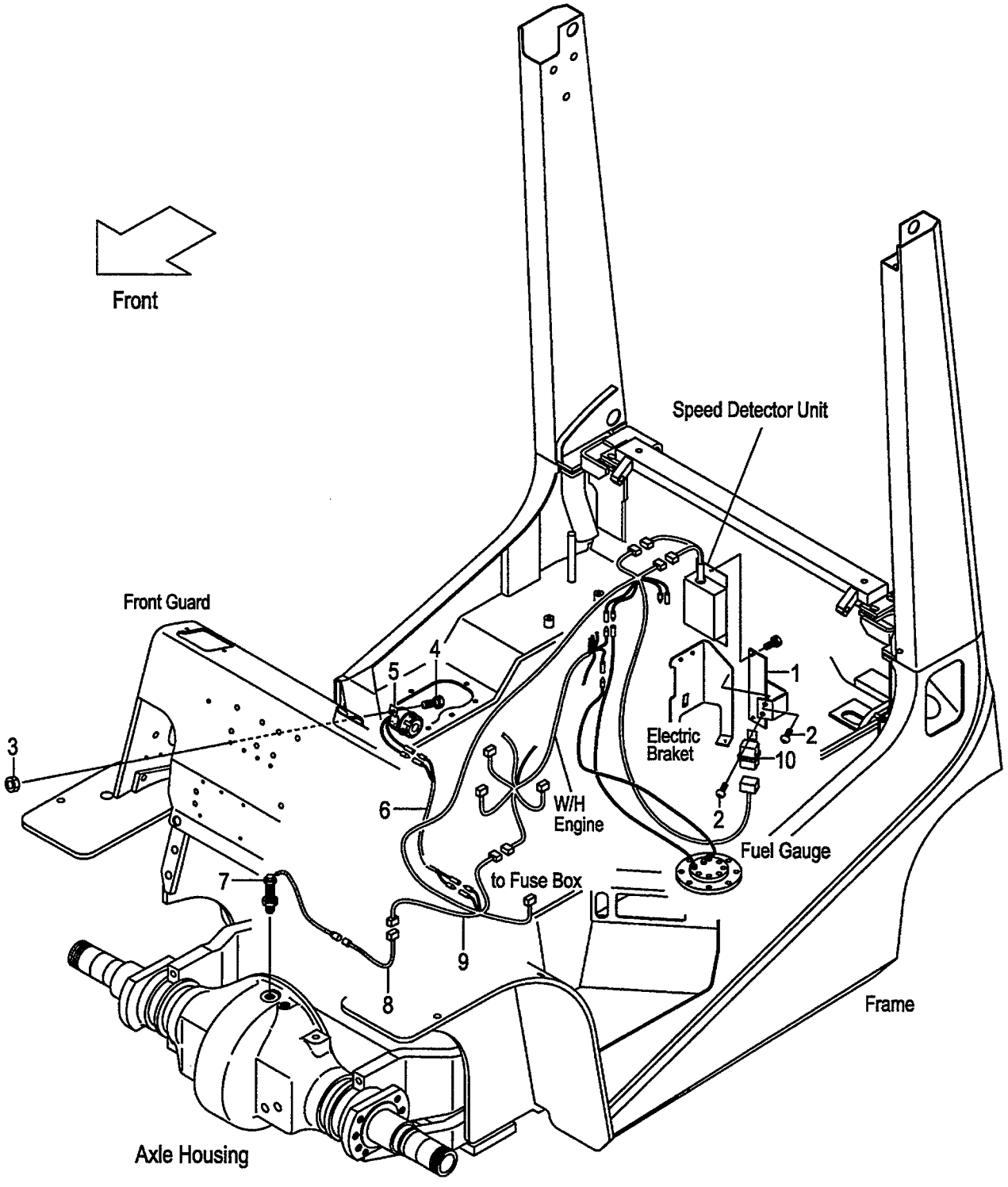

FIG.58
(F6022680)

A:FD20C18 FD20T18 FD25C18 FD25T18
B:FD20C7 FD20T7 FD25C7 FD25T7 FD20W7 FD25W7

Item No	Part No.	Mark	Description		Req'd	Remarks : Serial No.
1	539A7-52001		BRACKET,CONTROLLER	ﾌﾞﾗｹｯﾄ	1	[SASB05][SASB10][SASB15]
2	214A2-42611		SCREW	ｽｸﾘｭ	2	[SASB05][SASB10][SASB15]
3	01400-00006		NUT	ﾅｯﾄ	1	[SASB05][SASB10][SASB15]
4	239A5-42381		BOLT	ﾎﾞﾙﾄ	1	[SASB05][SASB10][SASB15]
5	529F7-52241		ALARM,BUZZER	ｱﾗｰﾑ	1	[SASB05][SASB10][SASB15]
6	558A9-92001		WIRE-HARNESS,LICENCE	ﾜｲﾔﾊｰﾈｽ	1	[SASB05][SASB10][SASB15]
7	16402-54331		SENSOR	ｾﾝｻ	1	[SASB05][SASB10][SASB15]
8	534A7-50601		WIRE-HARNESS,SAS	ﾜｲﾔﾊｰﾈｽ	1	[SASB05][SASB10][SASB15]
9	539B7-52031		WIRE-HARNESS,CONTROL	ﾜｲﾔﾊｰﾈｽ	1	[SASB05][SASB10][SASB15]
10	26062-42881		RELAY,12V	ﾘﾚｰ	1	[SASB05][SASB10][SASB15]

FIG.59 SPEED ALARM SYSTEM [SASR]

(F6022690) スピードアラームシステム

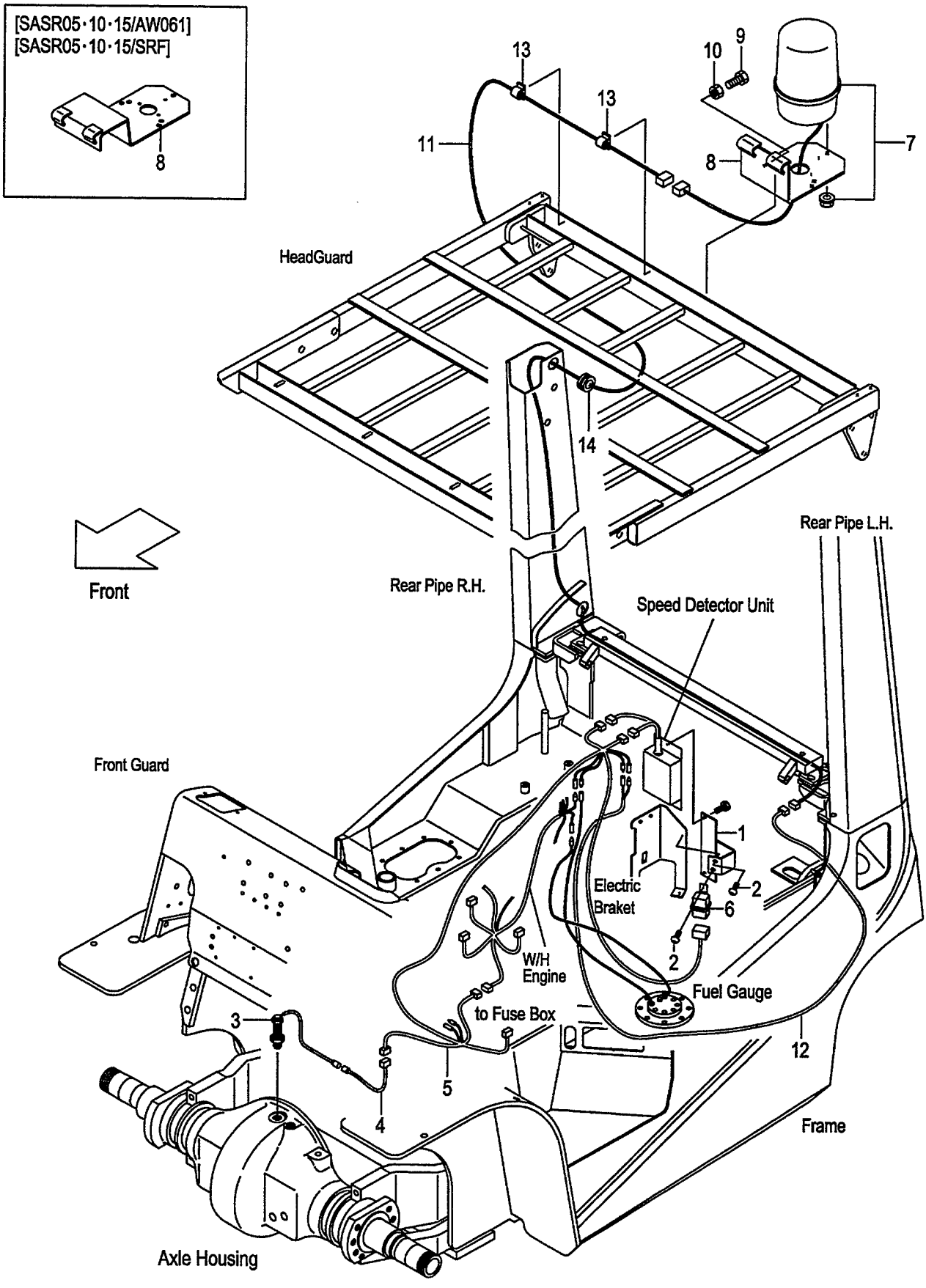

FIG.59
(F6022690)

A:FD20C18 FD20T18 FD25C18 FD25T18
B:FD20C7 FD20T7 FD25C7 FD25T7 FD20W7 FD25W7

Item No	Part No.	Mark	Description		Req'd	Remarks : Serial No.
1	539A7-52001		BRACKET,CONTROLLER	ﾌﾞﾗｹｯﾄ	1	[SASR05][SASR10][SASR15]
2	214A2-42611		SCREW	ｽｸﾘｭ	2	[SASR05][SASR10][SASR15]
3	16402-54331		SENSOR	ｾﾝｻ	1	[SASR05][SASR10][SASR15]
4	534A7-50601		WIRE-HARNESS,SAS	ﾜｲﾔﾊｰﾈｽ	1	[SASR05][SASR10][SASR15]
5	539B7-52031		WIRE-HARNESS,CONTROL	ﾜｲﾔﾊｰﾈｽ	1	[SASR05][SASR10][SASR15]
6	26062-42881		RELAY,12V	ﾘﾚｰ	1	[SASR05][SASR10][SASR15]
7	514A1-41001		LIGHT,REVOLVING	ﾗｲﾄ	1	[SASR05][SASR10][SASR15]
8	529F1-42251		BRACKET,REVOLVING	ﾌﾞﾗｹｯﾄ	1	[SASR05][SASR10][SASR15]
-	539A8-92251		BRACKET,REVOLVING	ﾌﾞﾗｹｯﾄ	1	[SASR05/AW061][SASR10/AW061] [SASR15/AW061]
-	539A8-92251		BRACKET,REVOLVING	ﾌﾞﾗｹｯﾄ	1	[SASR05/SRF][SASR10/SRF] [SASR15/SRF]
9	01100-08020		BOLT	ﾎﾞﾙﾄ	3	[SASR05][SASR10][SASR15]
10	01400-00008		NUT	ﾅｯﾄ	3	[SASR05][SASR10][SASR15]
11	514A1-42191		WIRE,LEAD	ﾜｲﾔ	1	[SASR05][SASR10][SASR15]
12	539A7-52101		WIRE,LEAD	ﾜｲﾔ	1	[SASR05][SASR10][SASR15]
13	27732-42311		CLAMP,HARNESS	ｸﾗﾝﾌﾟ	2	[SASR05][SASR10][SASR15]
14	22679-47301		GROMMET	ｸﾞﾛﾒｯﾄ	1	[SASR05][SASR10][SASR15]

FIG.60 SPEED ALARM SYSTEM [SASC]

(F60226A0) スピードアラームシステム

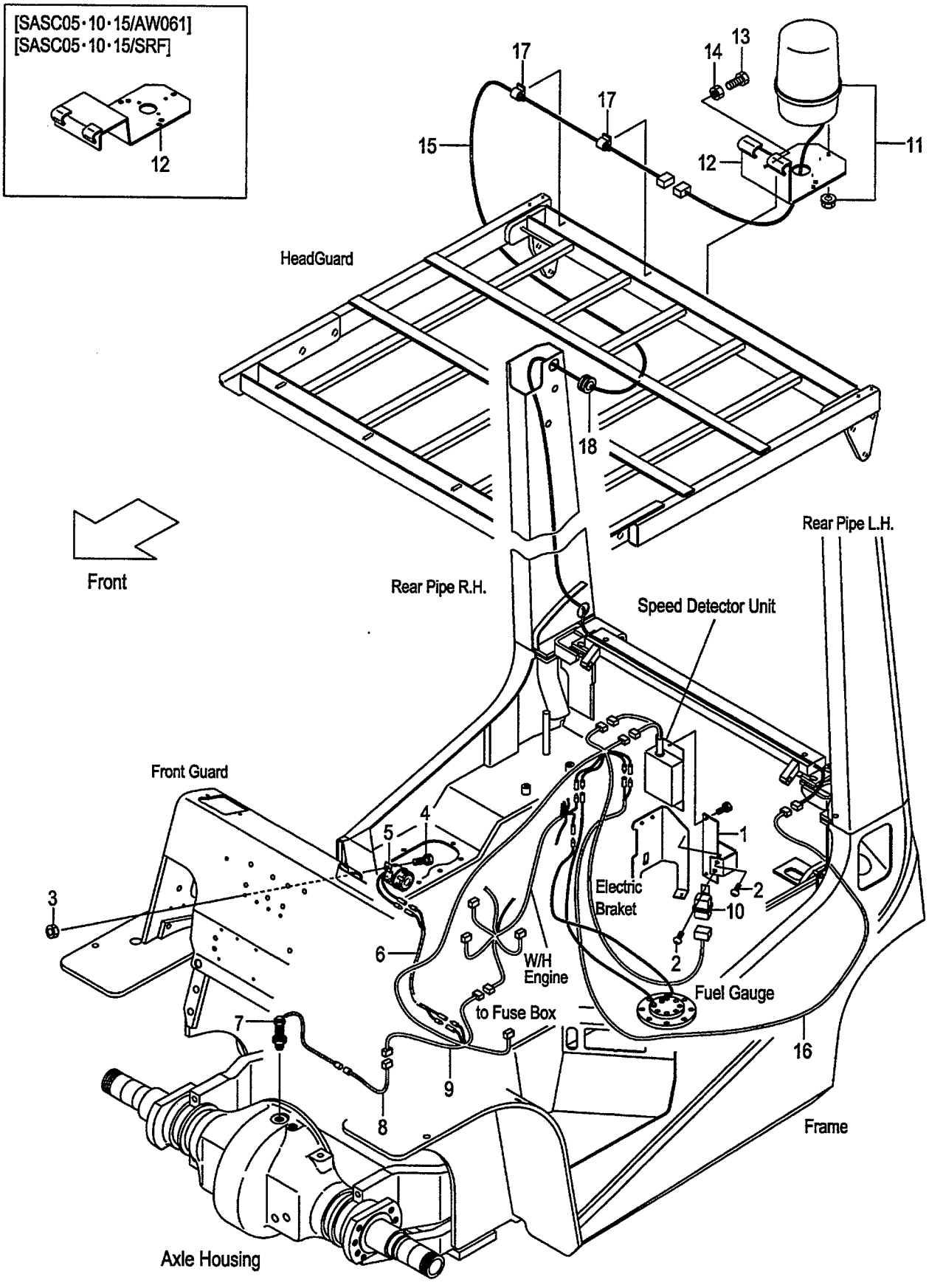

A:FD20C18 FD20T18 FD25C18 FD25T18
B:FD20C7 FD20T7 FD25C7 FD25T7 FD20W7 FD25W7

FIG.60
(F60226A0)

Item No	Part No.	Mark	Description		Req'd	Remarks : Serial No.
1	539A7-52001		BRACKET,CONTROLLER	ﾌﾞﾗｹｯﾄ	1	[SASC05][SASC10][SASC15]
2	214A2-42611		SCREW	ｽｸﾘｭ	2	[SASC05][SASC10][SASC15]
3	01400-00006		NUT	ﾅｯﾄ	1	[SASC05][SASC10][SASC15]
4	239A5-42381		BOLT	ﾎﾞﾙﾄ	1	[SASC05][SASC10][SASC15]
5	529F7-52241		ALARM,BUZZER	ｱﾗｰﾑ	1	[SASC05][SASC10][SASC15]
6	558A9-92001		WIRE-HARNESS,LICENCE	ﾜｲﾔﾊｰﾈｽ	1	[SASC05][SASC10][SASC15]
7	16402-54331		SENSOR	ｾﾝｻ	1	[SASC05][SASC10][SASC15]
8	534A7-50601		WIRE-HARNESS,SAS	ﾜｲﾔﾊｰﾈｽ	1	[SASC05][SASC10][SASC15]
9	539B7-52031		WIRE-HARNESS,CONTROL	ﾜｲﾔﾊｰﾈｽ	1	[SASC05][SASC10][SASC15]
10	26062-42881		RELAY,12V	ﾘﾚｰ	1	[SASC05][SASC10][SASC15]
11	514A1-41001		LIGHT,REVOLVING	ﾗｲﾄ	1	[SASC05][SASC10][SASC15]
12	529F1-42251		BRACKET,REVOLVING	ﾌﾞﾗｹｯﾄ	1	[SASC05][SASC10][SASC15]
-	539A8-92251		BRACKET,REVOLVING	ﾌﾞﾗｹｯﾄ	1	[SASR05/AW061][SASC10/AW061] [SASC15/AW061]
-	539A8-92251		BRACKET,REVOLVING	ﾌﾞﾗｹｯﾄ	1	[SASR05/SRF][SASC10/SRF] [SASC15/SRF]
13	01100-08020		BOLT	ﾎﾞﾙﾄ	3	[SASC05][SASC10][SASC15]
14	01400-00008		NUT	ﾅｯﾄ	3	[SASC05][SASC10][SASC15]
15	514A1-42191		WIRE,LEAD	ﾜｲﾔ	1	[SASC05][SASC10][SASC15]
16	539A7-52101		WIRE,LEAD	ﾜｲﾔ	1	[SASC05][SASC10][SASC15]
17	27732-42311		CLAMP,HARNESS	ｸﾗﾝﾌﾟ	2	[SASC05][SASC10][SASC15]
18	22679-47301		GROMMET	ｸﾞﾛﾒｯﾄ	1	[SASC05][SASC10][SASC15]

FIG.61 OK MONITOR [OKM]

(F60226B0) OKモニタ

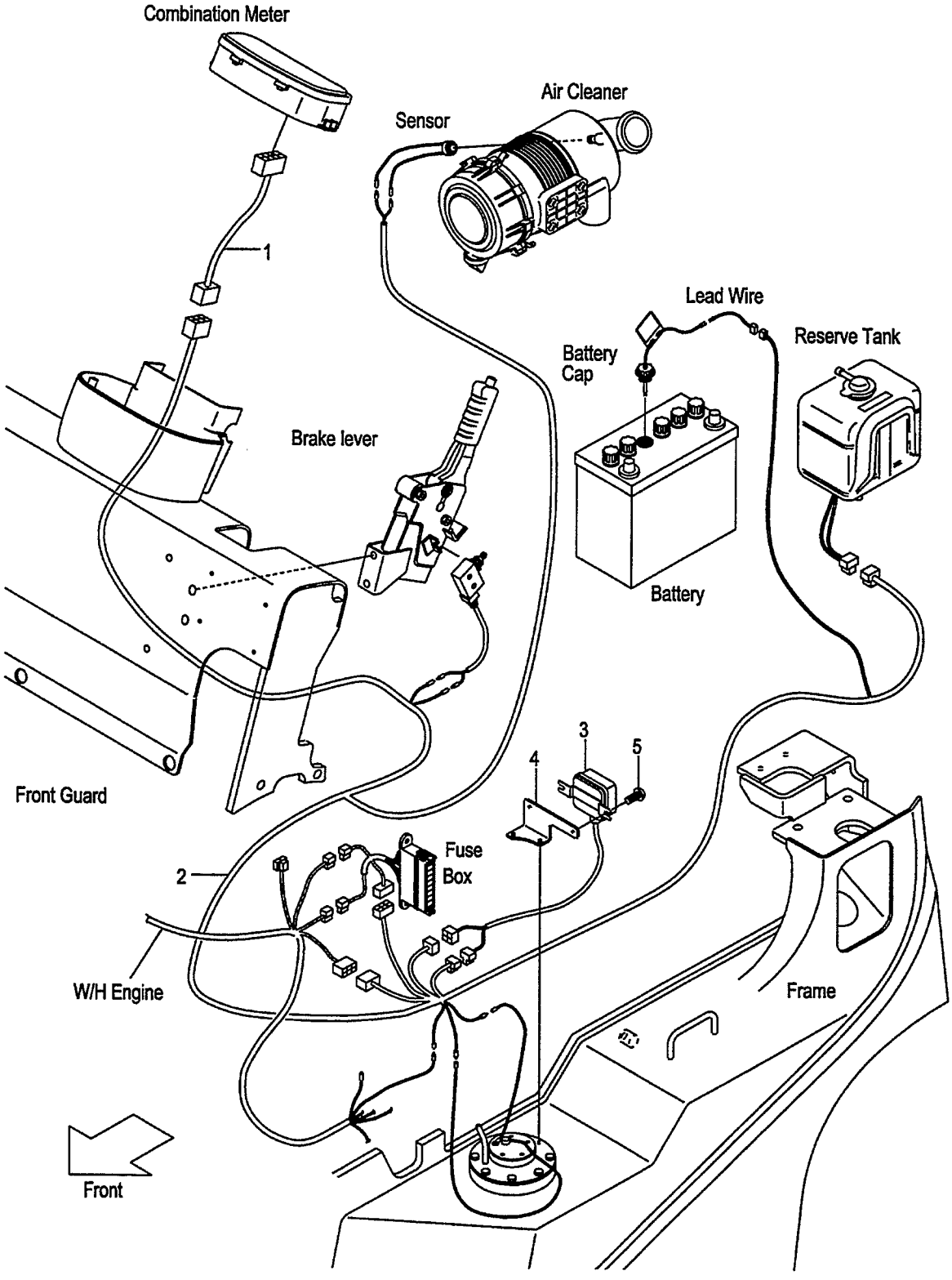

A:FD20C18 FD20T18 FD25C18 FD25T18
B:FD20C7 FD20T7 FD25C7 FD25T7 FD20W7 FD25W7

FIG.61
(F60226B0)

Item No	Part No.	Mark	Description		Req'd	Remarks : Serial No.
1	516G6-22011		WIRE,LEAD	ﾜｲﾔ	1	[OKM]
2	539A6-22011		WIRE-HARNESS,OKM	ﾜｲﾔﾊｰﾈｽ	1	[OKM]
3	229F2-42161		MODULE,WARNING	ﾓｼﾞｭｰﾙ	1	[OKM]
4	539A6-22001		BRACKET,WARN.MODULE	ﾌﾞﾗｹｯﾄ	1	[OKM]
5	214A2-42611		SCREW	ｽｸﾘｭ	2	[OKM]

FIG.62 DRIVE UNIT MOUNT (CLUTCH)

(F6022510) ﾄﾞﾗｲﾌﾞﾕﾆｯﾄﾏｳﾝﾄ

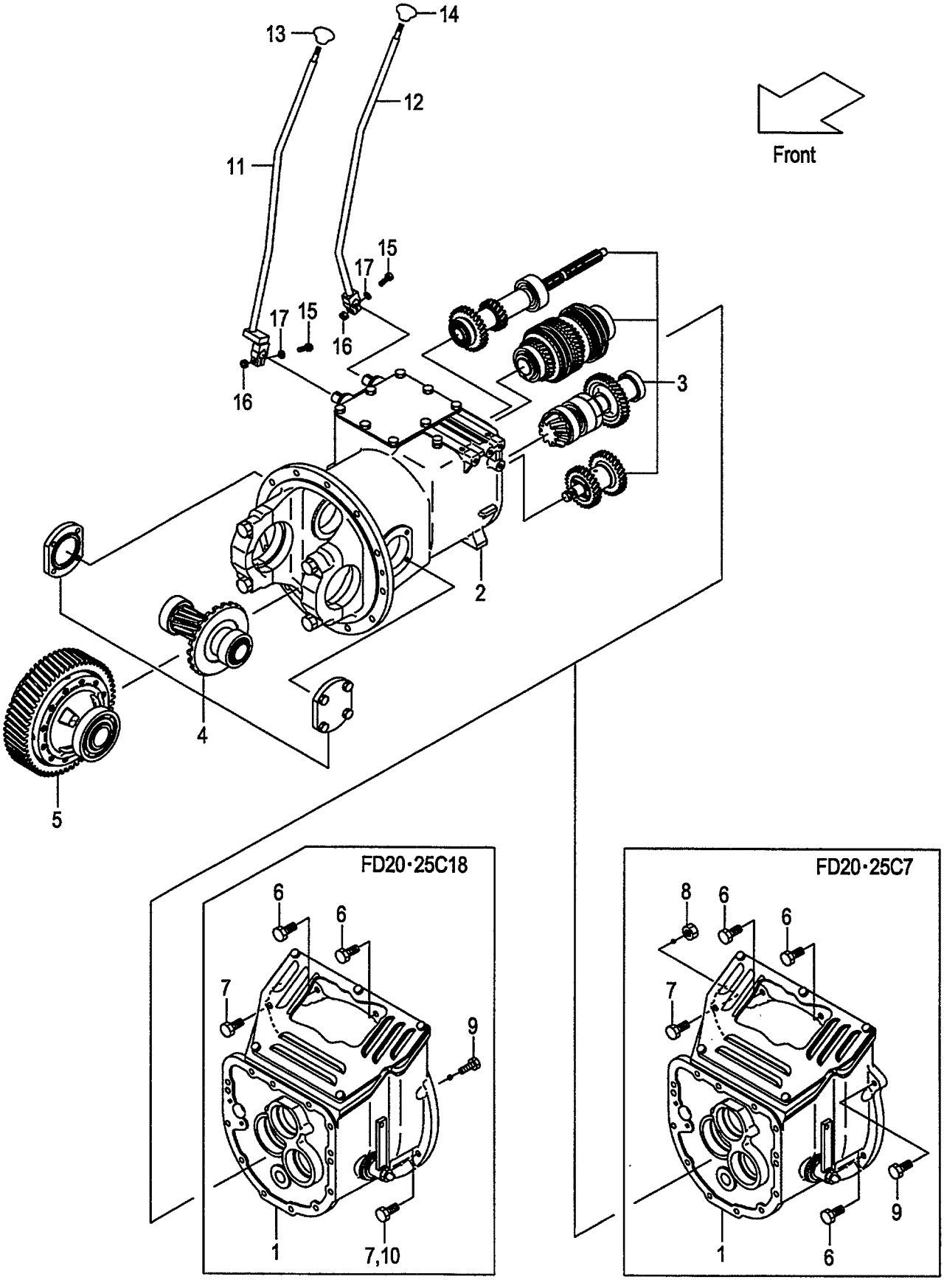

A:FD20C18 FD25C18
B:FD20C7 FD25C7

FIG.62
(F6022510)

Item No	Part No.	Mark	Description		Req'd	Remarks : Serial No.
A1	138A2-50001		UNIT-ASSY,DRIVE	ﾄﾞﾗｲﾌﾞﾕﾆｯﾄｱｯｾﾝ	1	A INC.1-5
-	136F2-50002		UNIT-ASSY,DRIVE	ﾄﾞﾗｲﾌﾞﾕﾆｯﾄｱｯｾﾝ	1	B INC.1-5
-	138A2-50041		UNIT-ASSY,DRIVE	ﾄﾞﾗｲﾌﾞﾕﾆｯﾄｱｯｾﾝ	1	A [PC] INC.1-5
-	136F2-50042		UNIT-ASSY,DRIVE	ﾄﾞﾗｲﾌﾞﾕﾆｯﾄｱｯｾﾝ	1	B [PC] INC.1-5
1	NO PART NO.		CLUTCH	ｸﾗｯﾁ	1	A SEE FIG.63
-	NO PART NO.		CLUTCH	ｸﾗｯﾁ	1	B SEE FIG.63
-	NO PART NO.		CLUTCH	ｸﾗｯﾁ	1	A [PC]SEE FIG.63
-	NO PART NO.		CLUTCH	ｸﾗｯﾁ	1	B [PC]SEE FIG.63
2	NO PART NO.		CASE,T/M	ｹｰｽ	1	SEE FIG.64
3	NO PART NO.		GEAR,T/M	ｷﾞﾔｰ	1	A SEE FIG.65
-	NO PART NO.		GEAR,T/M	ｷﾞﾔｰ	1	B SEE FIG.65
4	NO PART NO.		REDUCTION	ﾘﾀﾞｸｼｮﾝ	1	A SEE FIG.72
-	NO PART NO.		REDUCTION	ﾘﾀﾞｸｼｮﾝ	1	B SEE FIG.72
5	NO PART NO.		DIFFERENTIAL	ﾃﾞﾌｧﾚﾝｼｬﾙ	1	SEE FIG.73
6	01184-10050		BOLT	ﾎﾞﾙﾄ	2	A
-	01183-10035		BOLT	ﾎﾞﾙﾄ	3	B
7	01184-10055		BOLT	ﾎﾞﾙﾄ	4	A
-	01184-10050		BOLT	ﾎﾞﾙﾄ	4	B
8	01400-00010		NUT	ﾅｯﾄ	4	B
9	01184-10040		BOLT	ﾎﾞﾙﾄ	1	A
-	01183-08040		BOLT	ﾎﾞﾙﾄ	1	B
10	01184-10065		BOLT	ﾎﾞﾙﾄ	1	A
11	239A2-52001		LEVER,SPEED	ﾚﾊﾞｰ	1	
-	539A2-32001		LEVER,SPEED	ﾚﾊﾞｰ	1	[LCR]
12	239A2-52061		LEVER,DIRECTION	ﾚﾊﾞｰ	1	
-	539A2-32041		LEVER,DIRECTION	ﾚﾊﾞｰ	1	[LCR]
13	214A2-52002		KNOB,SPEED	ﾉﾌﾞ	1	
14	214A2-52012		KNOB,DIRECTION	ﾉﾌﾞ	1	
15	01100-08045		BOLT	ﾎﾞﾙﾄ	2	
16	01400-00008		NUT	ﾅｯﾄ	2	
17	02010-00008		WASHER	ﾜｯｼｬ	2	

FIG.63 CLUTCH (CLUTCH)

(F6022520) クラッチ

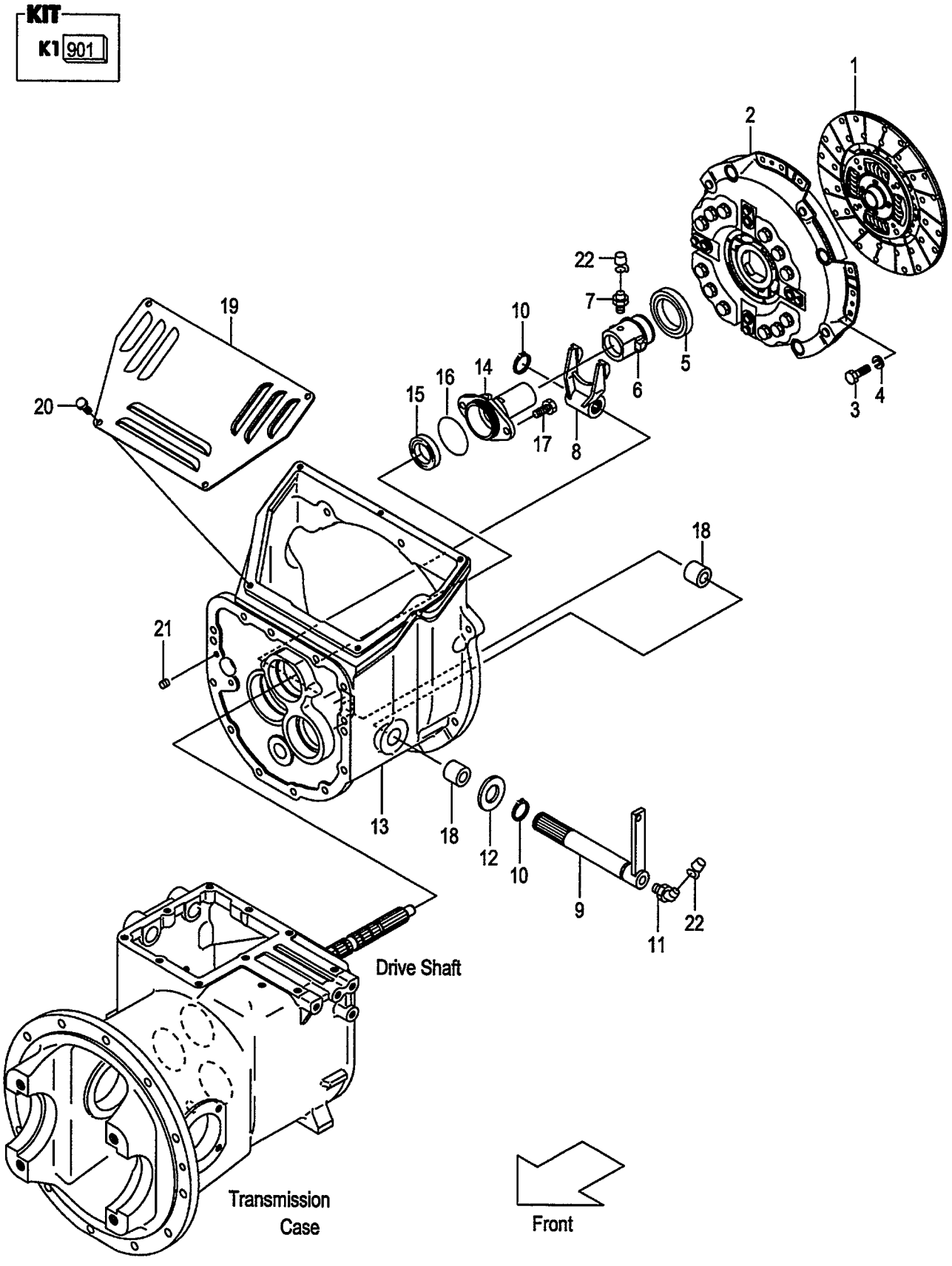

A:FD20C18 FD25C18
B:FD20C7 FD25C7

FIG.63
(F6022520)

Item No	Part No.	Mark	Description		Req'd	Remarks : Serial No.
901	134A3-48911	K1	KIT,REPAIR,T/M	ﾘﾍﾟｱｷｯﾄ	1	INC.10,15,16 &,OTHERS
1	134A3-10211		DISK,CLUTCH	ﾃﾞｨｽｸ	1	
2	131A3-10201		COVER,CLUTCH	ｶﾊﾞｰ	1	
3	01103-08016		BOLT	ﾎﾞﾙﾄ	12	
4	02011-00008		WASHER	ﾜｯｼｬ	12	
5	15533-10301		BRG,THRUST	ﾍﾞｱﾘﾝｸﾞ	1	
6	134A3-12011		RETAINER,BRG	ﾘﾃｰﾅ	1	
7	04901-00100		FITTING	ﾌｨｯﾃｨﾝｸﾞ	1	
8	114A3-12012		YOKE	ﾖｰｸ	1	
9	114A3-10501		SHAFT	ｼｬﾌﾄ	1	
-	524G2-10502		SHAFT	ｼｬﾌﾄ	1	[PC]
10	02100-00025	*	RING,SNAP	ｽﾅｯﾌﾟﾘﾝｸﾞ	2	
11	04901-00160		FITTING	ﾌｨｯﾃｨﾝｸﾞ	1	
12	02000-00024		WASHER	ﾜｯｼｬ	1	
13	134A3-12001		HOUSING,CLUTCH	ﾊｳｼﾞﾝｸﾞ	1	A
-	142F3-12001		HOUSING,CLUTCH	ﾊｳｼﾞﾝｸﾞ	1	B
14	134A3-12021		SUPPORT,RETAINER	ｻﾎﾟｰﾄ	1	
15	134A3-12031	*	SEAL,OIL	ｼｰﾙ	1	
16	03310-00600	*	O-RING	Oﾘﾝｸﾞ	1	
17	01213-10025		BOLT	ﾎﾞﾙﾄ	2	
18	12003-12021		BUSHING	ﾌﾞｯｼﾝｸﾞ	2	
19	124G3-12011		COVER,CLUTCH-HOUSING	ｶﾊﾞｰ	1	
20	01183-08016		BOLT	ﾎﾞﾙﾄ	5	
21	01066-08008		PLUG	ﾌﾟﾗｸﾞ	2	
22	22199-12401		CAP,NIPPLE	ｷｬｯﾌﾟ	2	

FIG.64 MISSION CASE (CLUTCH)(OIL CLUTCH)

(F6022530) ミッションケース

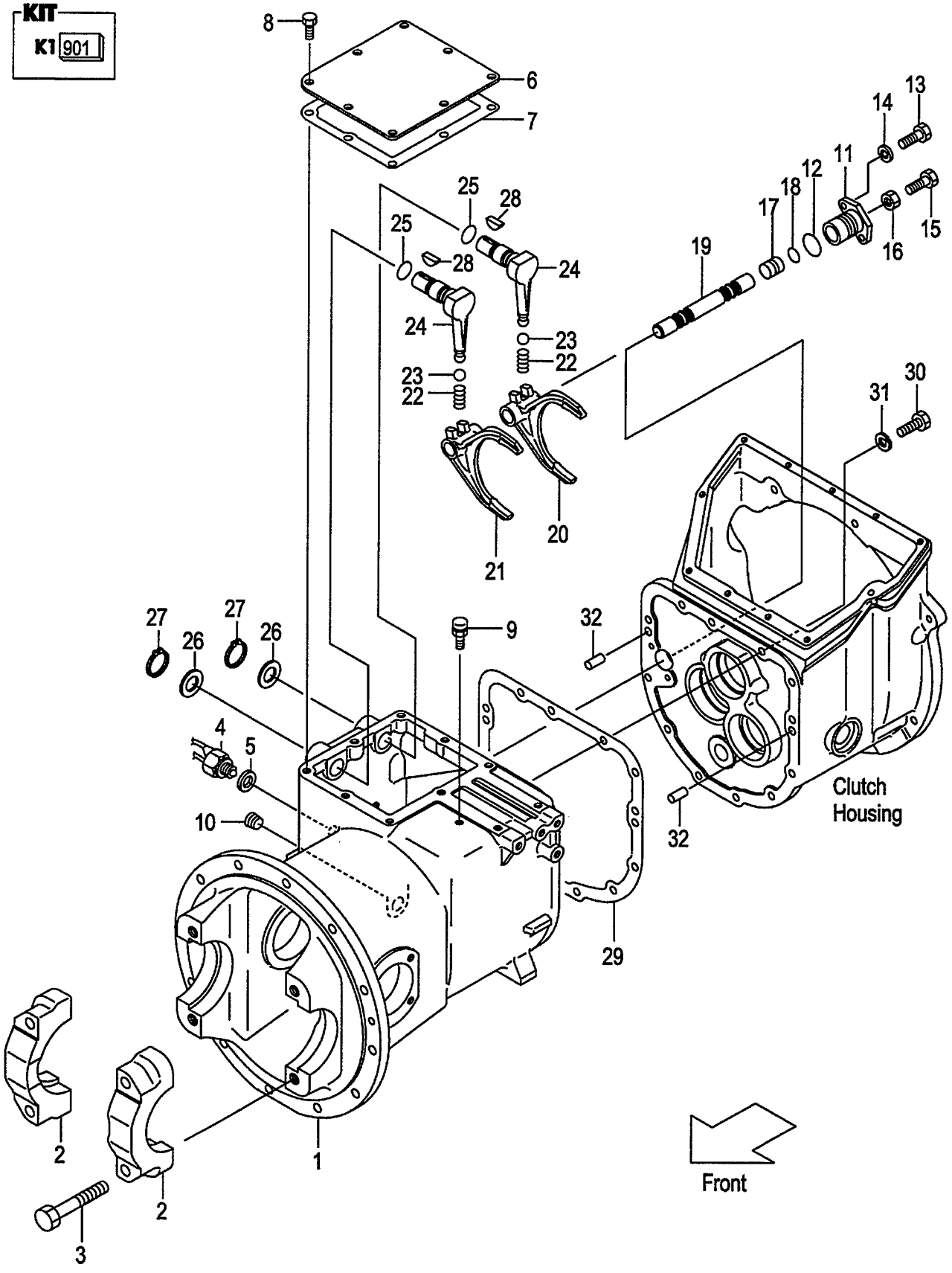

A:FD20C18 FD25C18
B:FD20C7 FD25C7
C:FD20W7 FD25W7

FIG.64
(F6022530)

Item No	Part No.	Mark	Description		Req'd	Remarks : Serial No.
901	134A3-48911	K1	KIT,REPAIR,T/M	ﾘﾍﾟｱｷｯﾄ	1	A,B INC.5,7,12,18,25,27-29 & OTHERS
A1	134A3-40201		CASE-ASSY,T/M	ﾄﾗﾝｽﾐｯｼｮﾝｹｰｽｱｯｾﾝ	1	INC.1,2
1	NO PART NO.	#	CASE,T/M	ｹｰｽ	1	
2	NO PART NO.	#	CAP,BRG	ｷｬｯﾌﾟ	2	
3	134A3-42221		BOLT	ﾎﾞﾙﾄ	4	
4	12003-42451		SWITCH,BACK-LAMP	ｽｲｯﾁ	2	
5	12003-42461	*	PACKING,BACK-LAMP	ﾊﾟｯｷﾝｸﾞ	2	
6	134A3-42021		COVER,CASE	ｶﾊﾞｰ	1	
7	134A3-42031	*	GASKET,CASE-COVER	ｶﾞｽｹｯﾄ	1	
8	01184-10016		BOLT	ﾎﾞﾙﾄ	8	
9	15573-42151		BREATHER,AIR	ﾌﾞﾘｰｻﾞ	1	
10	12163-82541		PLUG	ﾌﾟﾗｸﾞ	1	
11	12003-42052		SUPPORT,ARM-SHAFT	ｻﾎﾟｰﾄ	1	
12	03310-00300	*	O-RING	Oﾘﾝｸﾞ	1	
13	01103-08020		BOLT	ﾎﾞﾙﾄ	2	
14	02011-00008		WASHER	ﾜｯｼｬ	2	
15	01123-10045		BOLT	ﾎﾞﾙﾄ	1	
16	01400-00010		NUT	ﾅｯﾄ	1	
17	12003-42061		SPACER	ｽﾍﾟｰｻ	1	
18	03300-00160	*	O-RING	Oﾘﾝｸﾞ	1	
19	134A3-42401		ROD,SHIFT	ﾛｯﾄﾞ	1	
20	134A3-42411		FORK,SHIFT,F-R	ﾌｫｰｸ	1	
21	134A3-42421		FORK,SHIFT,H-L	ﾌｫｰｸ	1	
22	12003-42421		SPRING	ｽﾌﾟﾘﾝｸﾞ	2	
23	03190-00013		BALL,STEEL	ﾎﾞｰﾙ	2	
24	134A3-42431		LEVER,SHIFT	ﾚﾊﾞｰ	2	
25	134A3-42451	*	O-RING	Oﾘﾝｸﾞ	2	
26	02000-00022		WASHER	ﾜｯｼｬ	2	
27	02100-00022	*	RING,SNAP	ｽﾅｯﾌﾟﾘﾝｸﾞ	2	
28	02360-05019	*	KEY	ｷｰ	2	
29	134A3-12051	*	GASKET	ｶﾞｽｹｯﾄ	1	
30	01103-10030		BOLT	ﾎﾞﾙﾄ	12	
31	02011-00010		WASHER	ﾜｯｼｬ	12	
32	02212-12020		PIN,PARALLEL	ﾋﾟﾝ	2	

FIG.65 MISSION GEAR (CLUTCH)(OIL CLUTCH)

(F6022540) ミッションギヤー

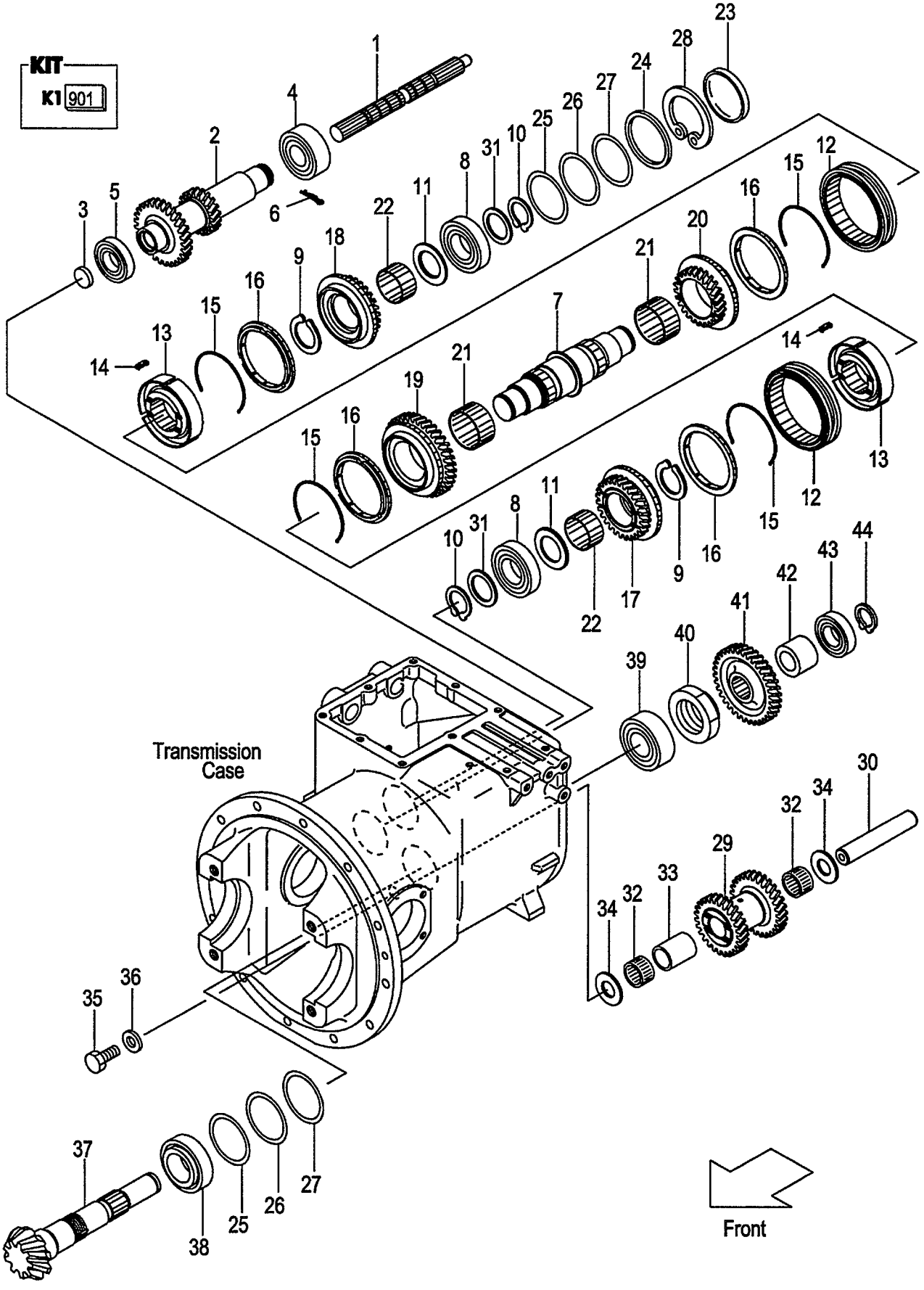

A:FD20C18 FD25C18
B:FD20C7 FD25C7
C:FD20W7 FD25W7

FIG.65
(F6022540)

Item No	Part No.	Mark	Description		Req'd	Remarks : Serial No.
901	134A3-48911	K1	KIT,REPAIR,T/M	ﾘﾍﾟｱｷｯﾄ	1	A,B
						INC.6,9,10,23,25-28,40,44 & OTHERS
1	134A3-42051		SHAFT,MAIN-DRIVE	ｼｬﾌﾄ	1	
2	136F3-42001		SHAFT,INPUT	ｼｬﾌﾄ	1	
3	134A3-42071		CAP	ｷｬｯﾌﾟ	1	
4	03000-06207		BRG,BALL	ﾍﾞｱﾘﾝｸﾞ	1	
5	03000-06208		BRG,BALL	ﾍﾞｱﾘﾝｸﾞ	1	
6	134A3-42081	*	PIN,SNAP	ﾋﾟﾝ	1	
7	134A3-42101		SHAFT,MAIN	ｼｬﾌﾄ	1	
8	134A3-42211		BRG,BALL	ﾍﾞｱﾘﾝｸﾞ	2	
9	02120-00050	*	RING,SNAP	ｽﾅｯﾌﾟﾘﾝｸﾞ	2	
10	02100-00040	*	RING,SNAP	ｽﾅｯﾌﾟﾘﾝｸﾞ	2	
11	124T3-43001		PLATE,THRUST	ﾌﾟﾚｰﾄ	2	
A1	134A3-40221		SYNCHRONIZER-ASSY	ｼﾝｸﾛﾅｲｻﾞｱｯｾﾝ	2	INC.12-15
12	134A3-42111		SLEEVE	ｽﾘｰﾌﾞ	2	
13	134A3-42121		HUB,CLUTCH	ﾊﾌﾞ	2	
14	15573-42011		INSERT	ｲﾝｻｰﾄ	6	
15	134A3-42131		SPRING	ｽﾌﾟﾘﾝｸﾞ	4	
16	134A3-42141		RING,BLOCK	ﾘﾝｸﾞ	4	
17	139A3-42011		GEAR,HIGH	ｷﾞﾔｰ	1	
18	134A3-42151		GEAR,HIGH & FORWAD	ｷﾞﾔｰ	1	
19	131A3-42021		GEAR,LOW-SPEED	ｷﾞﾔｰ	1	
20	134A3-42171		GEAR,REVERSE	ｷﾞﾔｰ	1	
21	134A3-42181		BRG,NEEDLE	ﾍﾞｱﾘﾝｸﾞ	2	
22	134A3-42191		BRG,NEEDLE	ﾍﾞｱﾘﾝｸﾞ	2	
23	134A3-42201	*	CAP	ｷｬｯﾌﾟ	1	
24	10113-40171		WASHER	ﾜｯｼｬ	1	
25	12003-42311	*	SHIM,T-0.5	ｼﾑ	2	
26	12003-42321	*	SHIM,T-0.2	ｼﾑ	4	
27	12003-42331	*	SHIM,T-0.1	ｼﾑ	2	
28	02121-00080	*	RING,SNAP	ｽﾅｯﾌﾟﾘﾝｸﾞ	1	
29	134A3-42251		GEAR,COUNTER	ｷﾞﾔｰ	1	
30	134A3-42261		SHAFT,COUNTER-GEAR	ｼｬﾌﾄ	1	
31	15913-42511		SPACER	ｽﾍﾟｰｻ	2	
32	12003-42281		BRG,NEEDLE	ﾍﾞｱﾘﾝｸﾞ	2	
33	12003-42291		SPACER	ｽﾍﾟｰｻ	1	
34	134A3-42271		PLATE,THRUST	ﾌﾟﾚｰﾄ	2	
35	01103-10020		BOLT	ﾎﾞﾙﾄ	1	
36	02000-00010		WASHER	ﾜｯｼｬ	1	
37	120S3-42011		SHAFT,OUTPUT	ｼｬﾌﾄ	1	A
-	134A3-42301		SHAFT,OUTPUT	ｼｬﾌﾄ	1	B,C
38	115G3-82641		BRG,TAPER-ROLLER	ﾍﾞｱﾘﾝｸﾞ	1	
39	12003-43031		BRG,TAPER-ROLLER	ﾍﾞｱﾘﾝｸﾞ	1	
40	115G3-82471	*	NUT	ﾅｯﾄ	1	
41	134A3-42321		GEAR,OUTPUT	ｷﾞﾔｰ	1	
42	134A3-42331		SPACER	ｽﾍﾟｰｻ	1	
43	03000-06306		BRG,BALL	ﾍﾞｱﾘﾝｸﾞ	1	
44	02100-00030	*	RING,SNAP	ｽﾅｯﾌﾟﾘﾝｸﾞ	1	

FIG.66 DRIVE UNIT MOUNT (TOR-CON)

(F60225A0) ﾄﾞﾗｲﾌﾞﾕﾆｯﾄﾏｳﾝﾄ

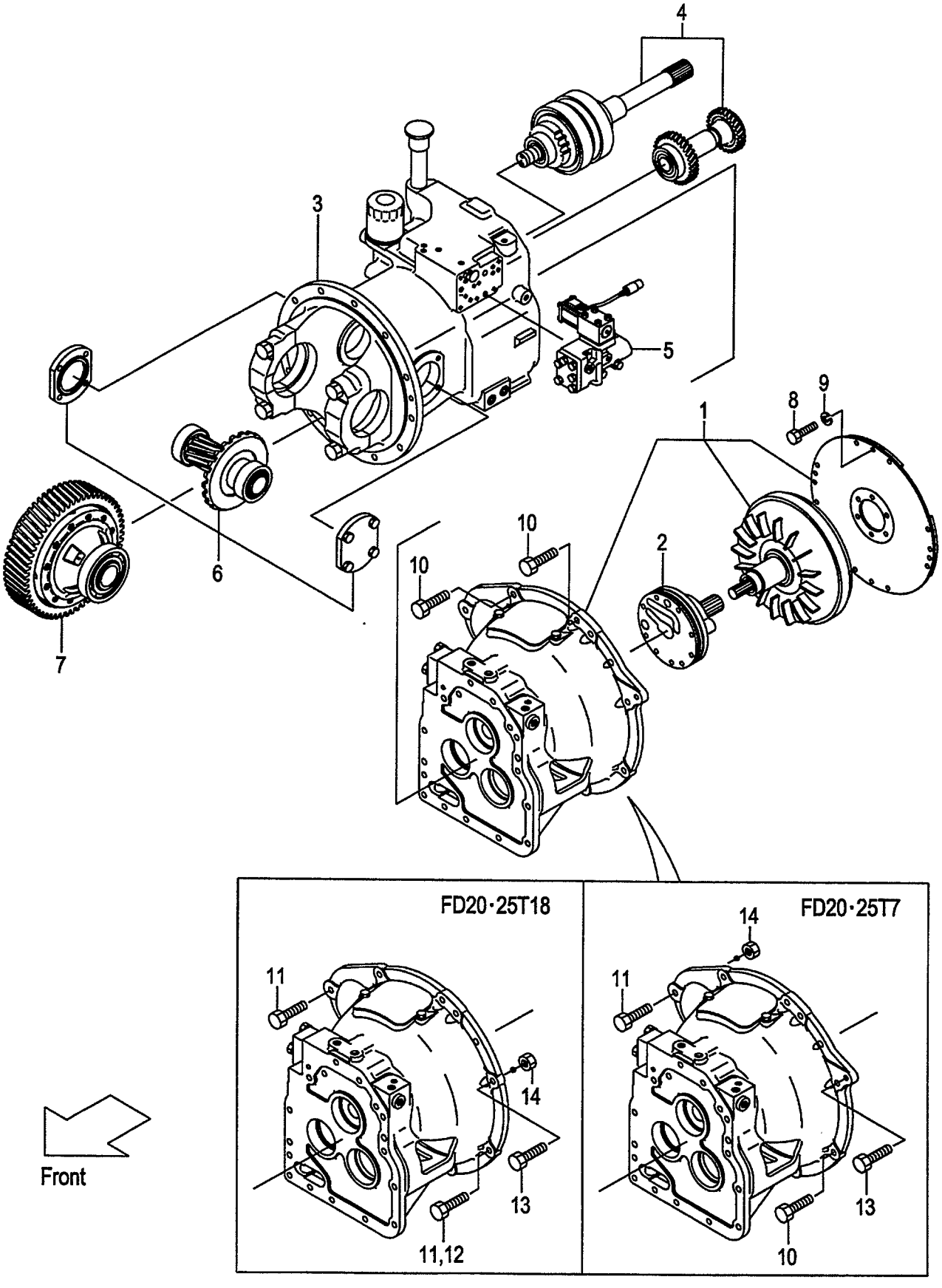

A:FD20T18 FD25T18
B:FD20T7 FD25T7

FIG.66
(F60225A0)

Item No	Part No.	Mark	Description		Req'd	Remarks : Serial No.
A1	520R8-30102		UNIT-ASSY,DRIVE	ﾄﾞﾗｲﾌﾞﾕﾆｯﾄｱｯｾﾝ	1	A INC.1-7
-	137B2-50003		UNIT-ASSY,DRIVE	ﾄﾞﾗｲﾌﾞﾕﾆｯﾄｱｯｾﾝ	1	B INC.1-7
-	537B3-80002		UNIT-ASSY,DRIVE	ﾄﾞﾗｲﾌﾞﾕﾆｯﾄｱｯｾﾝ	1	B [EXE][EXN] INC.1-7
-	136G2-50002		UNIT-ASSY,DRIVE	ﾄﾞﾗｲﾌﾞﾕﾆｯﾄｱｯｾﾝ	1	B [EXK] INC.1-7
-	537B4-50002		UNIT-ASSY,DRIVE	ﾄﾞﾗｲﾌﾞﾕﾆｯﾄｱｯｾﾝ	1	B [DNS] INC.1-7
1	NO PART NO.		CASE,T/C	ｹｰｽ	1	A SEE FIG.67
-	NO PART NO.		CASE,T/C	ｹｰｽ	1	B SEE FIG.67
2	NO PART NO.		PUMP	ﾎﾟﾝﾌﾟ	1	SEE FIG.68
3	NO PART NO.		CASE,T/M	ｹｰｽ	1	A SEE FIG.69
-	NO PART NO.		CASE,T/M	ｹｰｽ	1	B SEE FIG.69
-	NO PART NO.		CASE,T/M	ｹｰｽ	1	B [EXE][EXN]SEE FIG.69
-	NO PART NO.		CASE,T/M	ｹｰｽ	1	B [EXK]SEE FIG.69
4	NO PART NO.		PACK,CLUTCH	ﾊﾟｯｸ	1	SEE FIG.70
-	NO PART NO.		PACK,CLUTCH	ﾊﾟｯｸ	1	B [EXK]SEE FIG.70
5	NO PART NO.		VALVE	ﾊﾞﾙﾌﾞ	1	SEE FIG.71
6	NO PART NO.		REDUCTION	ﾘﾀﾞｸｼｮﾝ	1	A SEE FIG.72
-	NO PART NO.		REDUCTION	ﾘﾀﾞｸｼｮﾝ	1	B SEE FIG.72
7	NO PART NO.		DIFFERENTIAL	ﾃﾞﾌｧﾚﾝｼｬﾙ	1	SEE FIG.73
-	NO PART NO.		DIFFERENTIAL	ﾃﾞﾌｧﾚﾝｼｬﾙ	1	B [DNS]SEE FIG.73
8	01103-08020		BOLT	ﾎﾞﾙﾄ	12	A
-	01103-10016		BOLT	ﾎﾞﾙﾄ	8	B
9	02011-00008		WASHER	ﾜｯｼｬ	12	A
-	02011-00010		WASHER	ﾜｯｼｬ	8	B
10	01184-10050		BOLT	ﾎﾞﾙﾄ	2	A
-	01183-10035		BOLT	ﾎﾞﾙﾄ	3	B
11	01184-10055		BOLT	ﾎﾞﾙﾄ	4	A
-	01184-10050		BOLT	ﾎﾞﾙﾄ	4	B
12	01184-10040		BOLT	ﾎﾞﾙﾄ	1	A
13	01184-10065		BOLT	ﾎﾞﾙﾄ	1	A
-	01183-08040		BOLT	ﾎﾞﾙﾄ	1	B
14	01400-00010		NUT	ﾅｯﾄ	1	A
-	01400-00010		NUT	ﾅｯﾄ	4	B

FIG.67 TORQUE CONVERTER CASE (TOR-CON)

(F60225B0) トルクコンバータケース

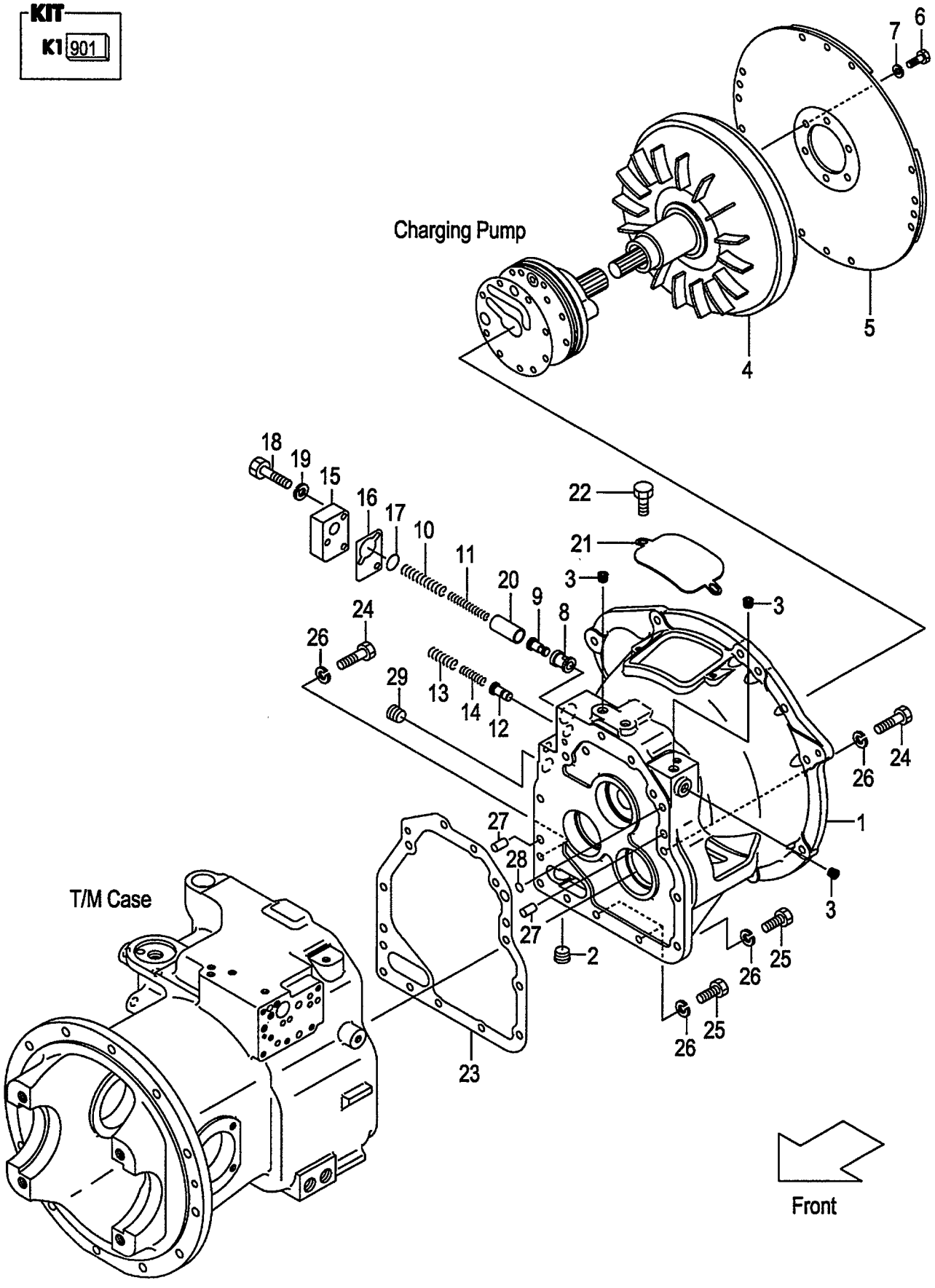

A:FD20T18 FD25T18
B:FD20T7 FD25T7

FIG.67
(F60225B0)

Item No	Part No.	Mark	Description		Req'd	Remarks : Serial No.
901	134B3-89821	K1	KIT,REPAIR,D/U	ﾘﾍﾟｱｷｯﾄ	1	INC.23,28 & OTHERS
1	134B3-82001		CASE,TOR-CON	ｹｰｽ	1	A
-	142G3-82001		CASE,TOR-CON	ｹｰｽ	1	B
2	27397-52101		PLUG	ﾌﾟﾗｸﾞ	1	
3	116H3-82101		PLUG	ﾌﾟﾗｸﾞ	4	
4	134G3-80301		TORQUE-CONVERTER	ﾄﾙｸｺﾝﾊﾞｰﾀ	1	A
-	137B3-80201		TORQUE-CONVERTER	ﾄﾙｸｺﾝﾊﾞｰﾀ	1	B
5	13683-82022		PLATE,INPUT	ﾌﾟﾚｰﾄ	1	A
-	137B3-80211		PLATE,INPUT	ﾌﾟﾚｰﾄ	1	B
6	12163-82621		BOLT	ﾎﾞﾙﾄ	6	
7	02003-20010		WASHER	ﾜｯｼｬ	6	
8	134B3-82281		SLEEVE	ｽﾘｰﾌﾞ	1	
9	134B3-82301		PISTON	ﾋﾟｽﾄﾝ	1	
10	134B3-82021		SPRING	ｽﾌﾟﾘﾝｸﾞ	1	
11	134B3-82031		SPRING	ｽﾌﾟﾘﾝｸﾞ	1	
12	134B3-82011		PISTON	ﾋﾟｽﾄﾝ	1	
13	134B3-82311		SPRING	ｽﾌﾟﾘﾝｸﾞ	1	
14	134B3-82321		SPRING	ｽﾌﾟﾘﾝｸﾞ	1	
15	134B3-82041		COVER	ｶﾊﾞｰ	1	
16	134B3-82051		GASKET	ｶﾞｽｹｯﾄ	1	
17	15583-82541		O-RING	Oﾘﾝｸﾞ	1	
18	01103-08040		BOLT	ﾎﾞﾙﾄ	3	
19	02011-00008		WASHER	ﾜｯｼｬ	3	
20	134B3-82291		COLLAR	ｶﾗｰ	1	
21	131M2-52001		COVER	ｶﾊﾞｰ	1	
22	01185-08020		BOLT	ﾎﾞﾙﾄ	2	
23	134B3-82101	*	GASKET	ｶﾞｽｹｯﾄ	1	
24	01103-10065		BOLT	ﾎﾞﾙﾄ	10	
25	01103-10030		BOLT	ﾎﾞﾙﾄ	3	
26	02011-00010		WASHER	ﾜｯｼｬ	13	
27	02212-12020		PIN,PARALLEL	ﾋﾟﾝ	2	
28	15583-82521	*	O-RING	Oﾘﾝｸﾞ	1	
29	12163-82541		PLUG	ﾌﾟﾗｸﾞ	1	

FIG.68 CHARGING PUMP (TOR-CON)

(F60225C0) ﾁｬｰｼﾞﾝｸﾞﾎﾟﾝﾌﾟ

KIT

K1 901 K2 902

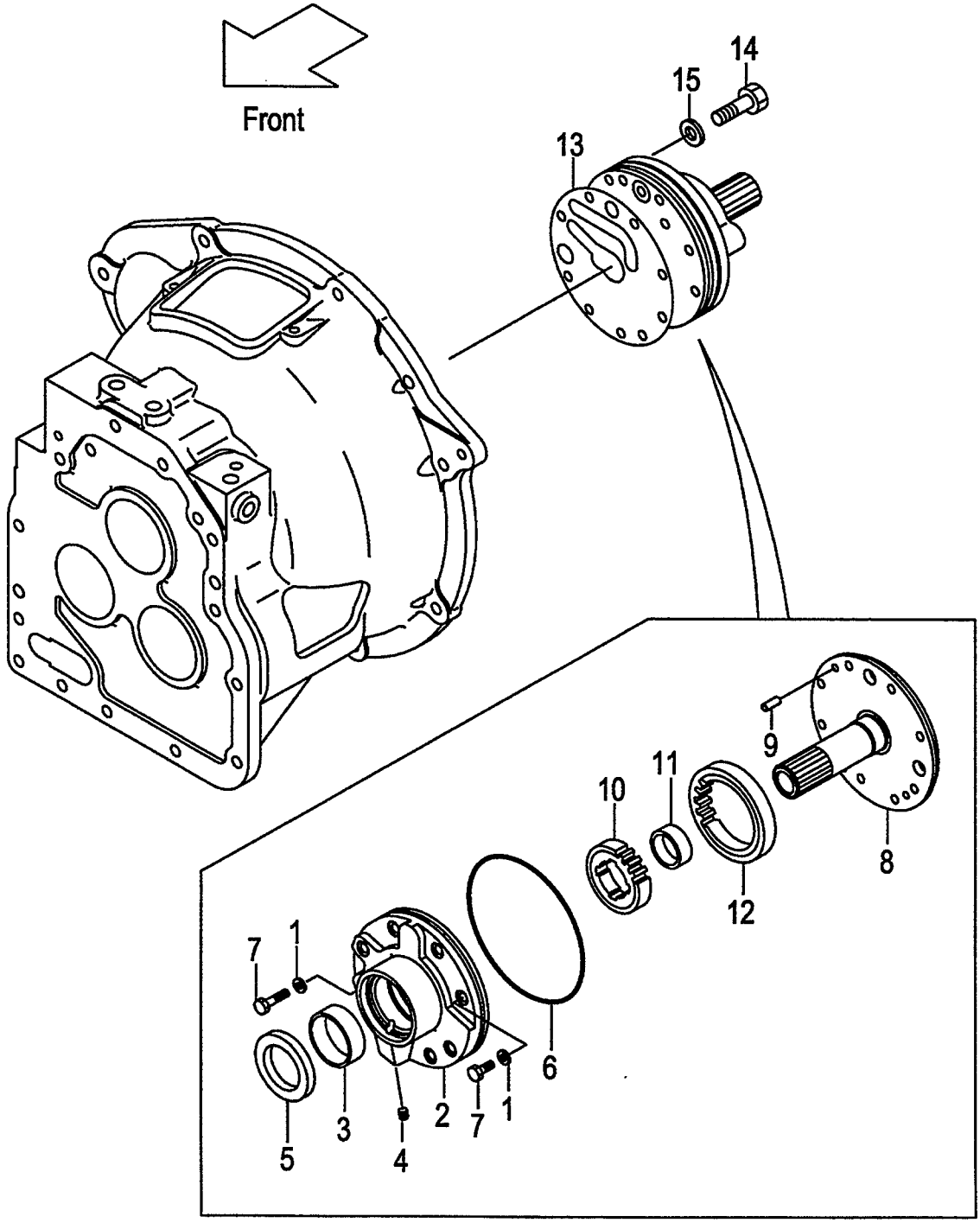

A:FD20T18 FD25T18
B:FD20T7 FD25T7

FIG.68
(F60225C0)

Item No	Part No.	Mark	Description		Req'd	Remarks : Serial No.
901	134B3-89861	K1	KIT,REPAIR,PUMP	ﾘﾍﾟｱｷｯﾄ	1	INC.1,5,6,13,15
A1	134G3-80401		PUMP-ASSY,CHARGING	ﾁｬｰｼﾞﾝｸﾞﾎﾟﾝﾌﾟｱｯｾﾝ	1	INC.1-12
902	134G3-89851	K2	KIT,BODY,PUMP	ﾎﾞﾃﾞｨｰｷｯﾄ	1	INC.2,8,10-12
1	12163-82561	*	PACKING	ﾊﾟｯｷﾝｸﾞ	2	
A2	15583-82141		CASE-ASSY,PUMP	ﾎﾟﾝﾌﾟｹｰｽｱｯｾﾝ	1	INC.2-4
2	NO PART NO.	#*	CASE,PUMP	ｹｰｽ	1	
3	15583-82161		BUSHING	ﾌﾞｯｼﾝｸﾞ	1	
4	23870-52821		PLUG	ﾌﾟﾗｸﾞ	1	
5	15583-82172	*	SEAL,OIL	ｼｰﾙ	1	
6	15583-82181	*	O-RING	Oﾘﾝｸﾞ	1	
7	01103-08035		BOLT	ﾎﾞﾙﾄ	2	
8	134G3-82001	*	SUPPORT,STARTER	ｻﾎﾟｰﾄ	1	
9	02212-06016		PIN,PARALLEL	ﾋﾟﾝ	2	
A3	15583-82211		GEAR-ASSY	ｷﾞﾔｰｱｯｾﾝ	1	INC.10-12
10	NO PART NO.	#*	GEAR,DRIVE	ｷﾞﾔｰ	1	
11	15583-82241	*	BUSHING	ﾌﾞｯｼﾝｸﾞ	1	
12	NO PART NO.	#*	GEAR,DRIVEN	ｷﾞﾔｰ	1	
13	134B3-82091	*	GASKET	ｶﾞｽｹｯﾄ	1	
14	01103-08045		BOLT	ﾎﾞﾙﾄ	6	
15	12163-82561	*	PACKING	ﾊﾟｯｷﾝｸﾞ	6	

FIG.69 MISSION CASE (TOR-CON)

(F60225D0) ミッションケース

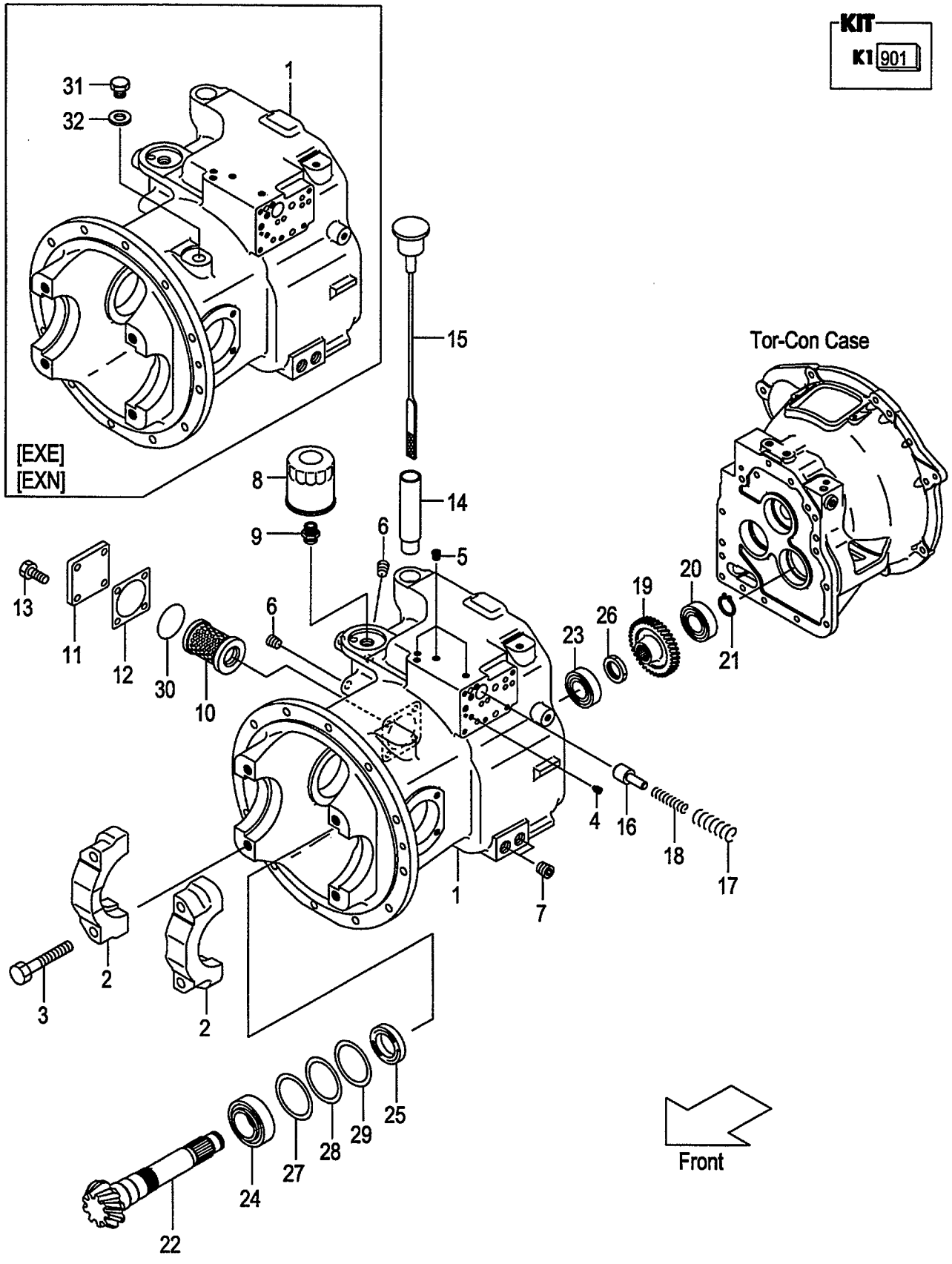

A:FD20T18 FD25T18
B:FD20T7 FD25T7

FIG.69
(F60225D0)

Item No	Part No.	Mark	Description		Req'd	Remarks : Serial No.
901	134B3-89821	K1	KIT,REPAIR,D/U	ﾘﾍﾟｱｷｯﾄ	1	INC.12,21,25-29& OTHERS
A1	134B3-80281		CASE-ASSY,T/M		1	INC.1,2
				ﾄﾗﾝｽﾐｯｼｮﾝｹｰｽｱｯｾﾝ		
-	534B3-80281		CASE-ASSY,T/M		1	B
				ﾄﾗﾝｽﾐｯｼｮﾝｹｰｽｱｯｾﾝ		[EXE][EXN] INC.1,2
1	NO PART NO.	#	CASE,T/M	ｹｰｽ	1	
-	NO PART NO.	#	CASE,T/M	ｹｰｽ	1	B
						[EXE][EXN]
2	NO PART NO.	#	CAP,BRG	ｷｬｯﾌﾟ	2	
3	134A3-42221		BOLT	ﾎﾞﾙﾄ	4	
4	115G3-82671		PLUG,CHOKE	ﾌﾟﾗｸﾞ	1	
5	116H3-82201		PLUG	ﾌﾟﾗｸﾞ	4	
6	116H3-82101		PLUG	ﾌﾟﾗｸﾞ	2	
7	12163-82541		PLUG	ﾌﾟﾗｸﾞ	2	
8	115G3-82241		FILTER,OIL	ﾌｨﾙﾀ	1	
9	115G3-82251		NIPPLE	ﾆｯﾌﾟﾙ	1	
10	124U3-82521		STRAINER,SUCTION	ｽﾄﾚｰﾅ	1	
11	124U3-82081		COVER,PLATE	ｶﾊﾞｰ	1	
12	124U3-82091	*	GASKET	ｶﾞｽｹｯﾄ	1	
13	01184-10025		BOLT	ﾎﾞﾙﾄ	4	
14	12163-82221		PIPE,OIL-FILL	ﾊﾟｲﾌﾟ	1	
15	12163-82232		CAP,OIL-FILL	ｷｬｯﾌﾟ	1	
16	15583-82441		SPOOL,ACC	ｽﾌﾟｰﾙ	1	
17	15583-82451		SPRING	ｽﾌﾟﾘﾝｸﾞ	1	
18	15583-82461		SPRING	ｽﾌﾟﾘﾝｸﾞ	1	
19	115G3-82451		GEAR,OUTPUT	ｷﾞﾔｰ	1	
-	134B3-82381		GEAR,OUTPUT	ｷﾞﾔｰ	1	B
						[EXK]
20	03000-06306		BRG,BALL	ﾍﾞｱﾘﾝｸﾞ	1	
21	02100-00030	*	RING,SNAP	ｽﾅｯﾌﾟﾘﾝｸﾞ	1	
22	120T3-82001		SHAFT,OUTPUT	ｼｬﾌﾄ	1	A
-	134B3-82141		SHAFT,OUTPUT	ｼｬﾌﾄ	1	B
23	12003-43031		BRG,TAPER-ROLLER	ﾍﾞｱﾘﾝｸﾞ	1	
24	115G3-82641		BRG,TAPER-ROLLER	ﾍﾞｱﾘﾝｸﾞ	1	
25	115G3-82651	*	SEAL,OIL	ｼｰﾙ	1	
26	115G3-82471	*	NUT	ﾅｯﾄ	1	
27	12003-42311	*	SHIM,T-0.5	ｼﾑ	1	
28	12003-42321	*	SHIM,T-0.2	ｼﾑ	2	
29	12003-42331	*	SHIM,T-0.1	ｼﾑ	1	
30	115G3-82111		O-RING	Oﾘﾝｸﾞ	1	
31	124T3-42651		BOLT	ﾎﾞﾙﾄ	1	B
						[EXE][EXN]
32	124T3-42661		WASHER	ﾜｯｼｬ	1	B
						[EXE][EXN]

FIG.70 CLUTCH PACK (TOR-CON)

(F60225E0) クラッチパック

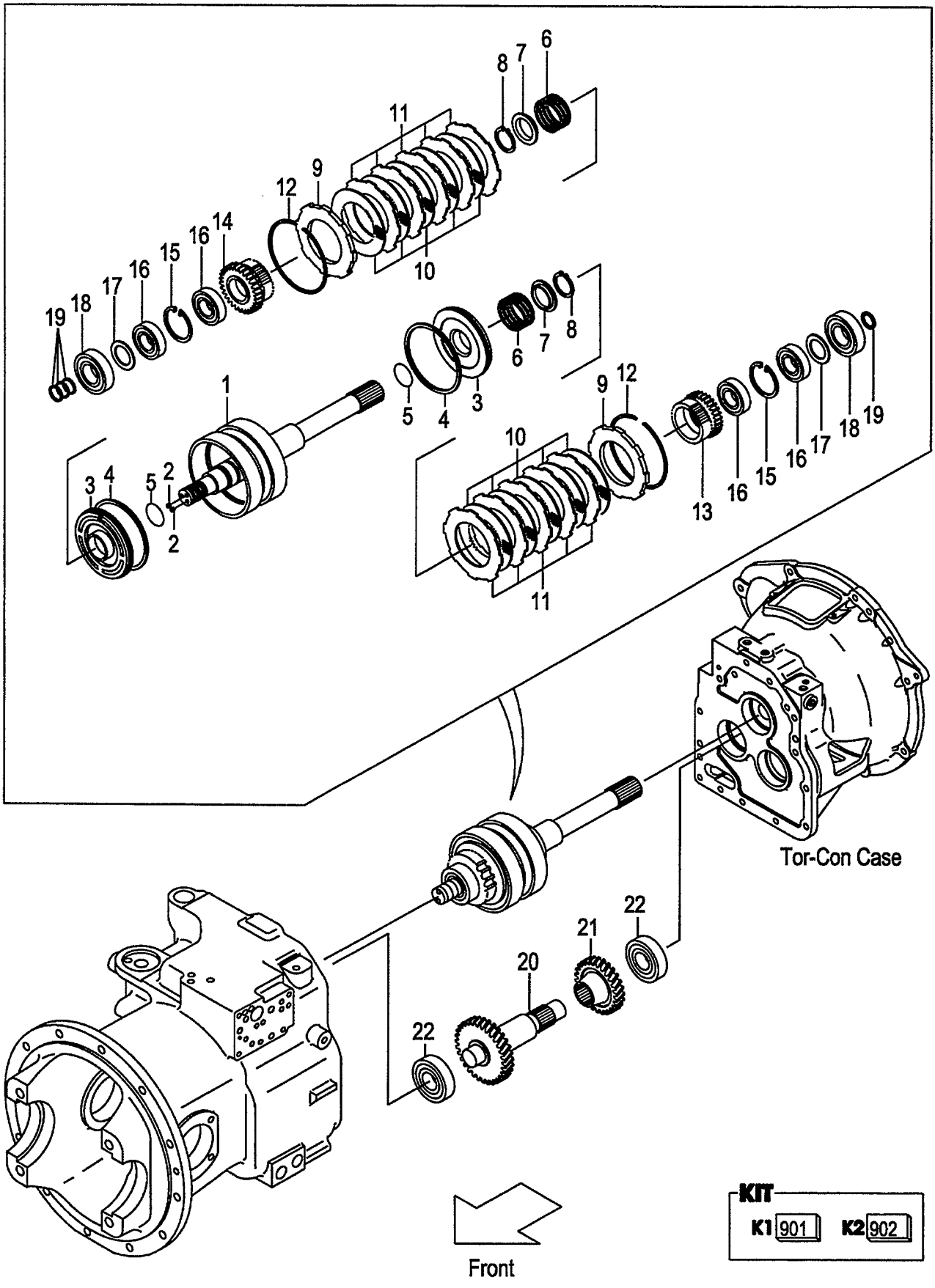

A:FD20T18 FD25T18
B:FD20T7 FD25T7

FIG.70
(F60225E0)

Item No	Part No.	Mark	Description		Req'd	Remarks : Serial No.
A1	134G3-80201		CLUTCH-ASSY,HYDRO	ｸﾗｯﾁｱｯｾﾝ	1	INC.1-19
-	132G3-80201		CLUTCH-ASSY,HYDRO	ｸﾗｯﾁｱｯｾﾝ	1	[EXK] INC.1-19
901	134G3-89811	K1	KIT,REPAIR,CLUTCH	ﾘﾍﾟｱｷｯﾄ	1	INC.4,5,7,8,12,19
A2	134G3-80251		CLUTCH-SUB-ASSY,HYD	ｸﾗｯﾁｻﾌﾞｱｯｾﾝ	1	INC.1-12
902	134G3-89831	K2	KIT,REPAIR,DISK	ﾘﾍﾟｱｷｯﾄ	1	INC.10,11
1	134G3-82101		SHAFT,INPUT	ｼｬﾌﾄ	1	INC.2
2	01066-08008		PLUG	ﾌﾟﾗｸﾞ	2	
3	134G3-82111		PISTON	ﾋﾟｽﾄﾝ	2	
4	134G3-82141	*	RING,SEAL	ﾘﾝｸﾞ	2	
5	11243-82211	*	O-RING	Oﾘﾝｸﾞ	2	
6	11243-82081		SPRING,RETURN,CLUTCH	ｽﾌﾟﾘﾝｸﾞ	2	
7	11243-82091	*	SHEET,SPRING	ｼｰﾄ	2	
8	02100-00040	*	RING,SNAP	ｽﾅｯﾌﾟﾘﾝｸﾞ	2	
9	134G3-82131		END,CLUTCH	ｴﾝﾄﾞ	2	
10	134B3-82401	*	PLATE,FRICTION	ﾌﾟﾚｰﾄ	10	
11	134G3-82121	*	PLATE,MATING	ﾌﾟﾚｰﾄ	10	
12	11243-82181	*	RING,SNAP	ｽﾅｯﾌﾟﾘﾝｸﾞ	2	
13	115G3-82331		GEAR,FORWARD	ｷﾞﾔｰ	1	
-	134B3-82361		GEAR,FORWARD	ｷﾞﾔｰ	1	B [EXK]
14	115G3-82341		GEAR,REVERSE	ｷﾞﾔｰ	1	
15	02121-00058		RING,SNAP	ｽﾅｯﾌﾟﾘﾝｸﾞ	2	
16	115G3-82351		BRG,BALL	ﾍﾞｱﾘﾝｸﾞ	4	
17	115G3-82361		PLATE,THRUST	ﾌﾟﾚｰﾄ	2	
18	03000-06306		BRG,BALL	ﾍﾞｱﾘﾝｸﾞ	2	
19	11243-82161	*	RING,SEAL	ﾘﾝｸﾞ	4	
20	115G3-82401		SHAFT,IDLER	ｼｬﾌﾄ	1	
21	115G3-82411		GEAR,IDLER	ｷﾞﾔｰ	1	
-	134B3-82371		GEAR,IDLER	ｷﾞﾔｰ	1	B [EXK]
22	03000-06306		BRG,BALL	ﾍﾞｱﾘﾝｸﾞ	2	

FIG.71 CONTROL VALVE (TOR-CON)

(F60225F0) コントロールバルブ

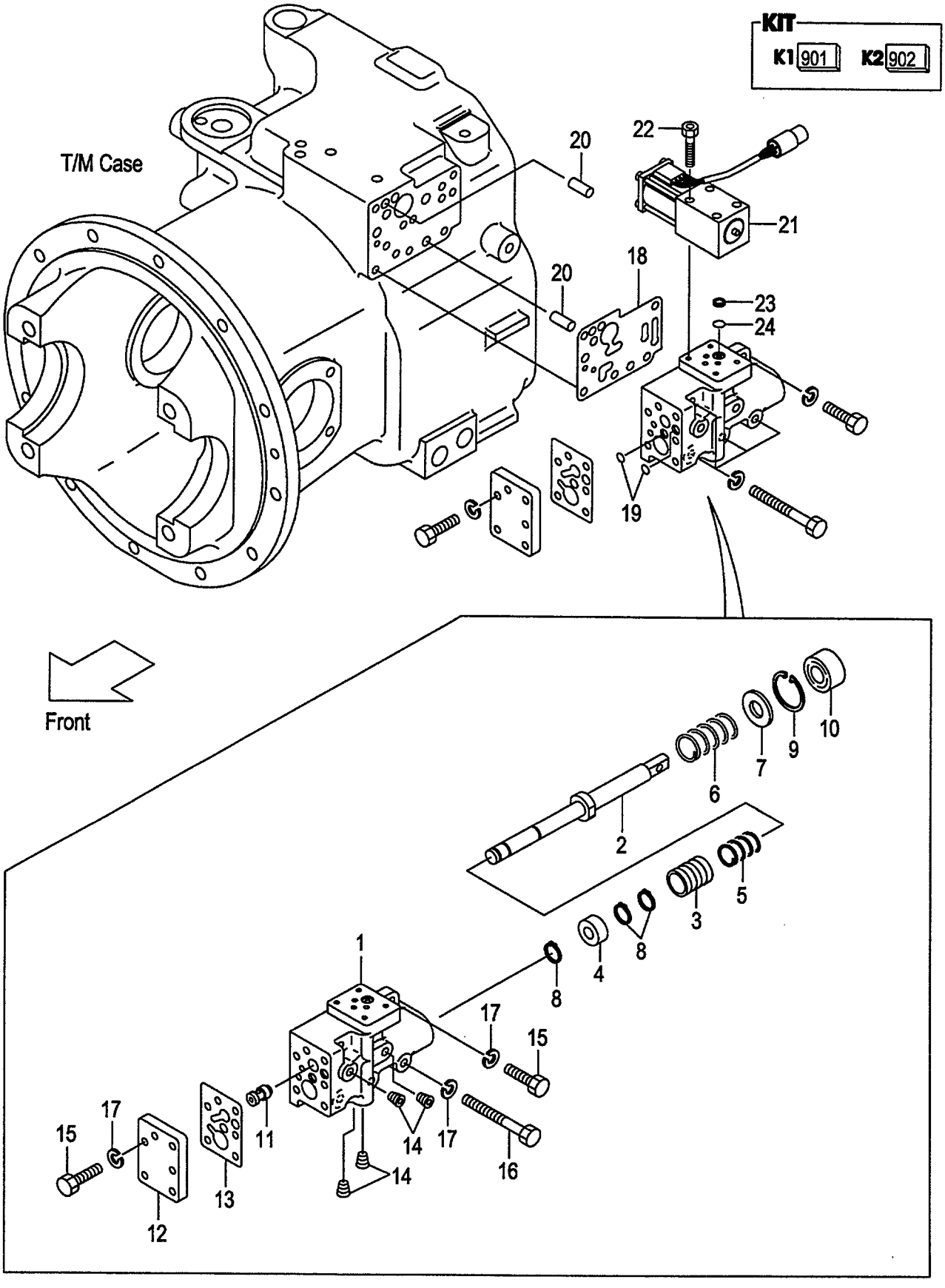

A:FD20T18 FD25T18
B:FD20T7 FD25T7

FIG.71
(F60225F0)

Item No	Part No.	Mark	Description		Req'd	Remarks : Serial No.
901	139B3-89801	K1	KIT,REPAIR,VALVE	ﾘﾍﾟｱｷｯﾄ	1	INC.8-10,13,18,19,23,24
A1	139B3-80201		VALVE-ASSY,CONTROL	ｺﾝﾄﾛｰﾙﾊﾞﾙﾌﾞｱｯｾﾝ	1	INC.1-17
902	139B3-89811	K2	KIT,BODY,VALVE	ﾎﾞﾃﾞｨｰｷｯﾄ	1	INC.1-4,11
1	NO PART NO.	#*	BODY,VALVE	ﾎﾞﾃﾞｨ	1	
2	115G3-82512	*	SPOOL,INCHING	ｽﾌﾟｰﾙ	1	
3	15793-82321	*	PLUNGER	ﾌﾟﾗﾝｼﾞｬ	1	
4	115G3-82522	*	PISTON	ﾋﾟｽﾄﾝ	1	
5	15793-82341		SPRING	ｽﾌﾟﾘﾝｸﾞ	1	
6	115G3-82491		SPRING	ｽﾌﾟﾘﾝｸﾞ	1	
7	15943-82651		SPACER	ｽﾍﾟｰｻ	1	
8	02100-00012	*	RING,SNAP	ｽﾅｯﾌﾟﾘﾝｸﾞ	3	
9	02110-00030	*	RING,SNAP	ｽﾅｯﾌﾟﾘﾝｸﾞ	1	
10	15943-82661	*	SEAL,OIL	ｼｰﾙ	1	
11	139B3-82121	*	SPOOL	ｽﾌﾟｰﾙ	1	
12	139B3-82111		COVER,VALVE	ｶﾊﾞｰ	1	
13	139B3-82131	*	GASKET,COVER	ｶﾞｽｹｯﾄ	1	
14	116H3-82201		PLUG	ﾌﾟﾗｸﾞ	4	
15	01103-08025		BOLT	ﾎﾞﾙﾄ	7	
16	01103-08060		BOLT	ﾎﾞﾙﾄ	4	
17	02011-00008		WASHER	ﾜｯｼｬ	11	
18	139B3-82141	*	GASKET	ｶﾞｽｹｯﾄ	1	
19	15583-82571	*	O-RING	Oﾘﾝｸﾞ	2	
20	02212-10025		PIN,PARALLEL	ﾋﾟﾝ	2	
21	135L3-82002		VALVE,SOLENOID	ﾊﾞﾙﾌﾞ	1	
22	01170-05045		BOLT	ﾎﾞﾙﾄ	4	
23	139B3-82161	*	FILTER,COIN	ﾌｨﾙﾀ	1	
24	139B3-82151	*	O-RING	Oﾘﾝｸﾞ	1	

FIG.72 REDUCTION

(F60225G0) リダクション

KIT
K1 901

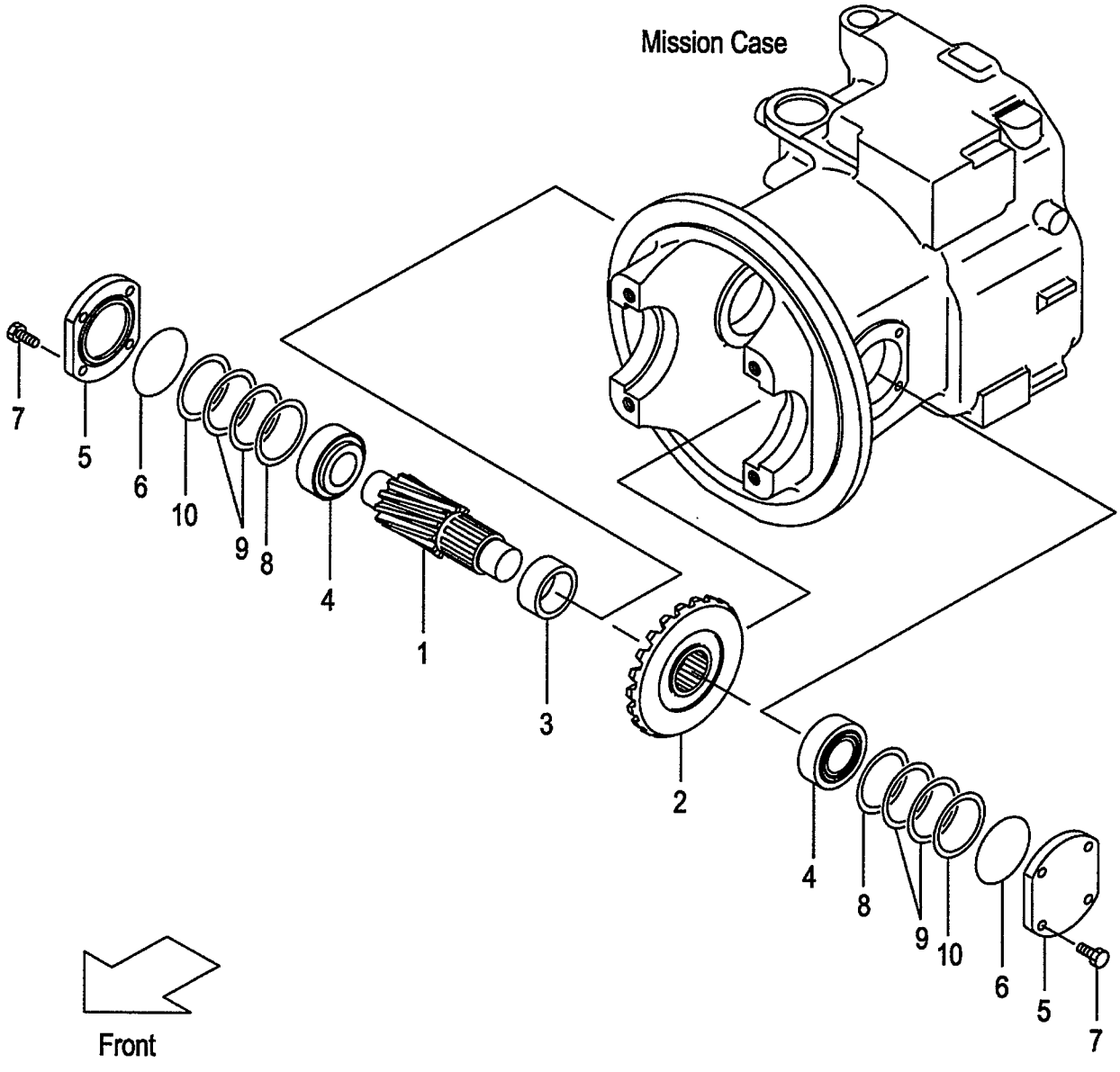

A:FD20C18 FD25C18 D:FD20T7 FD25T7
B:FD20T18 FD25T18 E:FD20W7 FD25W7
C:FD20C7 FD25C7

FIG.72
(F60225G0)

Item No	Part No.	Mark	Description		Req'd	Remarks : Serial No.
901	134A3-48911	K1	KIT,REPAIR,T/M	ﾘﾍﾟｱｷｯﾄ	1	A,C
						INC.6,8-10 & OTHERS
1	134A3-22001		SHAFT,FINAL-PINION	ｼｬﾌﾄ	1	
2	120S3-22011		GEAR,SPIRAL-BEVEL	ｷﾞﾔｰ	1	A,B
-	134A3-22011		GEAR,SPIRAL-BEVEL	ｷﾞﾔｰ	1	C,D,E
3	134A3-22021		SPACER	ｽﾍﾟｰｻ	1	
4	134A3-22031		BRG,TAPER-ROLLER	ﾍﾞｱﾘﾝｸﾞ	2	
5	134A3-22041		COVER,BRG	ｶﾊﾞｰ	2	
6	03310-00800	*	O-RING	Oﾘﾝｸﾞ	2	
7	01184-10025		BOLT	ﾎﾞﾙﾄ	8	
8	12003-42311	*	SHIM,T-0.5	ｼﾑ	2	
9	12003-42321	*	SHIM,T-0.2	ｼﾑ	4	
10	12003-42331	*	SHIM,T-0.1	ｼﾑ	2	

FIG.73 DIFFERENTIAL

(F60225H0) ﾃﾞｨﾌｧﾚﾝｼｬﾙ

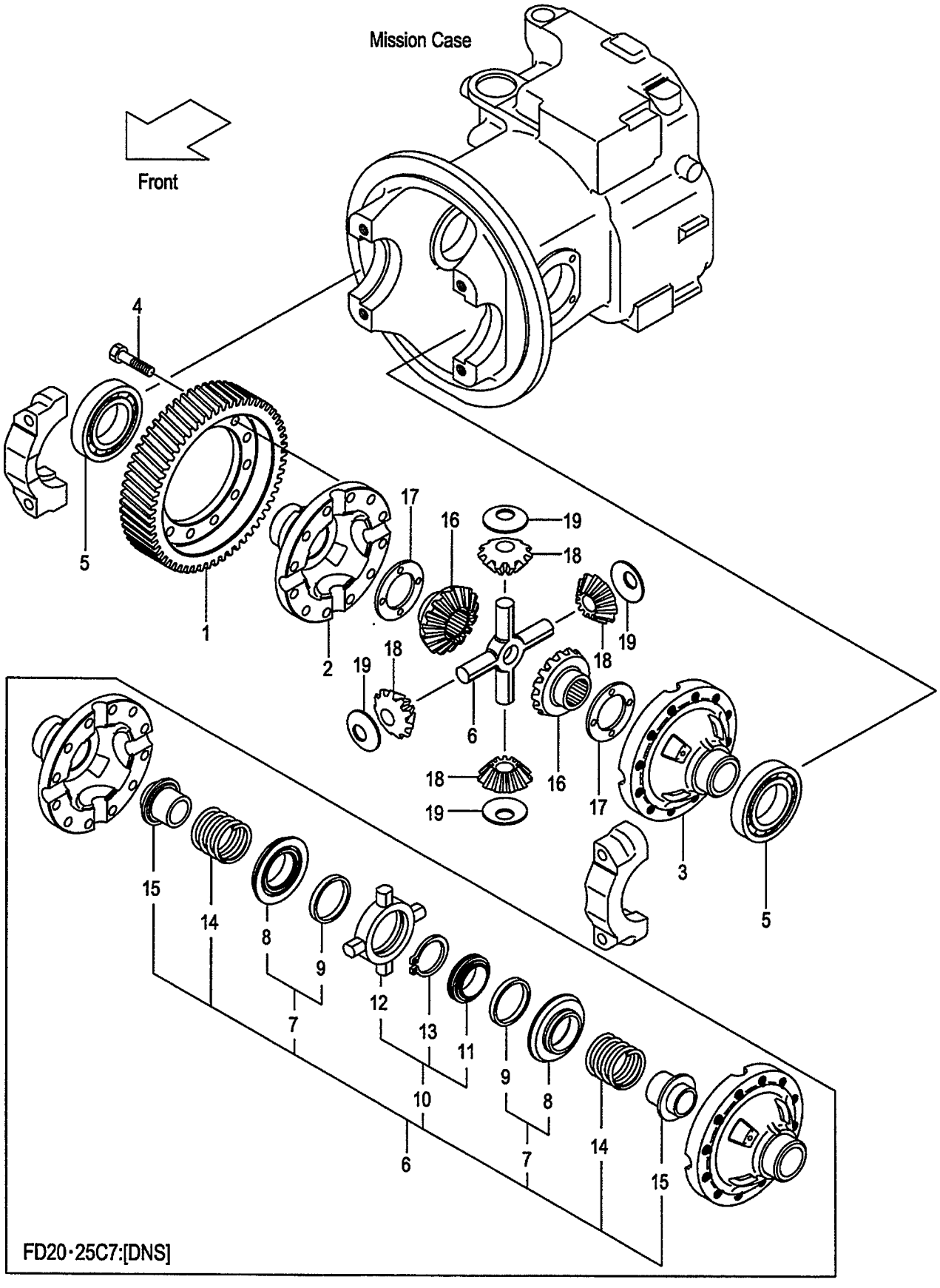

A:FD20C18 FD25C18 D:FD20T7 FD25T7
B:FD20T18 FD25T18 E:FD20W7 FD25W7
C:FD20C7 FD25C7

FIG.73
(F60225H0)

Item No	Part No.	Mark	Description		Req'd	Remarks : Serial No.
1	134A3-52001		GEAR,RING	ｷﾞﾔｰ	1	
A1	134A3-59801		CASE-ASSY,CROSS	ｸﾛｽｹｰｽｱｯｾﾝ	1	INC.2,3
2	NO PART NO.	#	CASE,CROSS,RH	ｹｰｽ	1	
3	NO PART NO.	#	CASE,CROSS,LH	ｹｰｽ	1	
4	134A3-52061		BOLT	ﾎﾞﾙﾄ	12	
5	03000-06213		BRG,BALL	ﾍﾞｱﾘﾝｸﾞ	2	
6	124G3-52011		SPIDER	ｽﾊﾟｲﾀﾞ	1	
-	79562-61202		NOSPIN	ﾉｰｽﾋﾟﾝ	1	D
						[DNS] INC.7-15
7	NO PART NO.	#	CLUTCH,DRIVEN	ｸﾗｯﾁ	2	D
						[DNS] INC.8,9
8	NO PART NO.	#	CLUTCH,DRIVEN	ｸﾗｯﾁ	2	D
						[DNS]
9	NO PART NO.	#	RING,HOLDOUT	ﾘﾝｸﾞ	2	D
						[DNS]
10	78658-42012		SPIDER	ｽﾊﾟｲﾀﾞ	1	D
						[DNS] INC.11-13
11	NO PART NO.	#	CAM,CENTER	ｶﾑ	1	D
						[DNS]
12	NO PART NO.	#	SPIDER	ｽﾊﾟｲﾀﾞ	1	D
						[DNS]
13	NO PART NO.	#	RING,SNAP	ｽﾅｯﾌﾟﾘﾝｸﾞ	1	D
						[DNS]
14	78470-98028		SPRING	ｽﾌﾟﾘﾝｸﾞ	2	D
						[DNS]
15	79562-61203		GEAR,SIDE	ｷﾞﾔｰ	2	D
						[DNS]
16	134A3-52041		GEAR,SIDE	ｷﾞﾔｰ	2	(WITHOUT DNS)
17	16113-52141		WASHER,THRUST,T-2.36	ﾜｯｼｬ	2	(WITHOUT DNS)
-	14453-52071		WASHER,THRUST,T-2.2	ﾜｯｼｬ	(2)	(WITHOUT DNS)
-	14453-52081		WASHER,THRUST,T-2.5	ﾜｯｼｬ	(2)	(WITHOUT DNS)
18	134A3-52051		GEAR,PINION	ｷﾞﾔｰ	4	(WITHOUT DNS)
19	16113-52121		WASHER,THRUST	ﾜｯｼｬ	4	(WITHOUT DNS)

FIG.74 DRIVE UNIT MOUNT (OIL CLUTCH)

(F60225J0) ﾄﾞﾗｲﾌﾞﾕﾆｯﾄﾏｳﾝﾄ

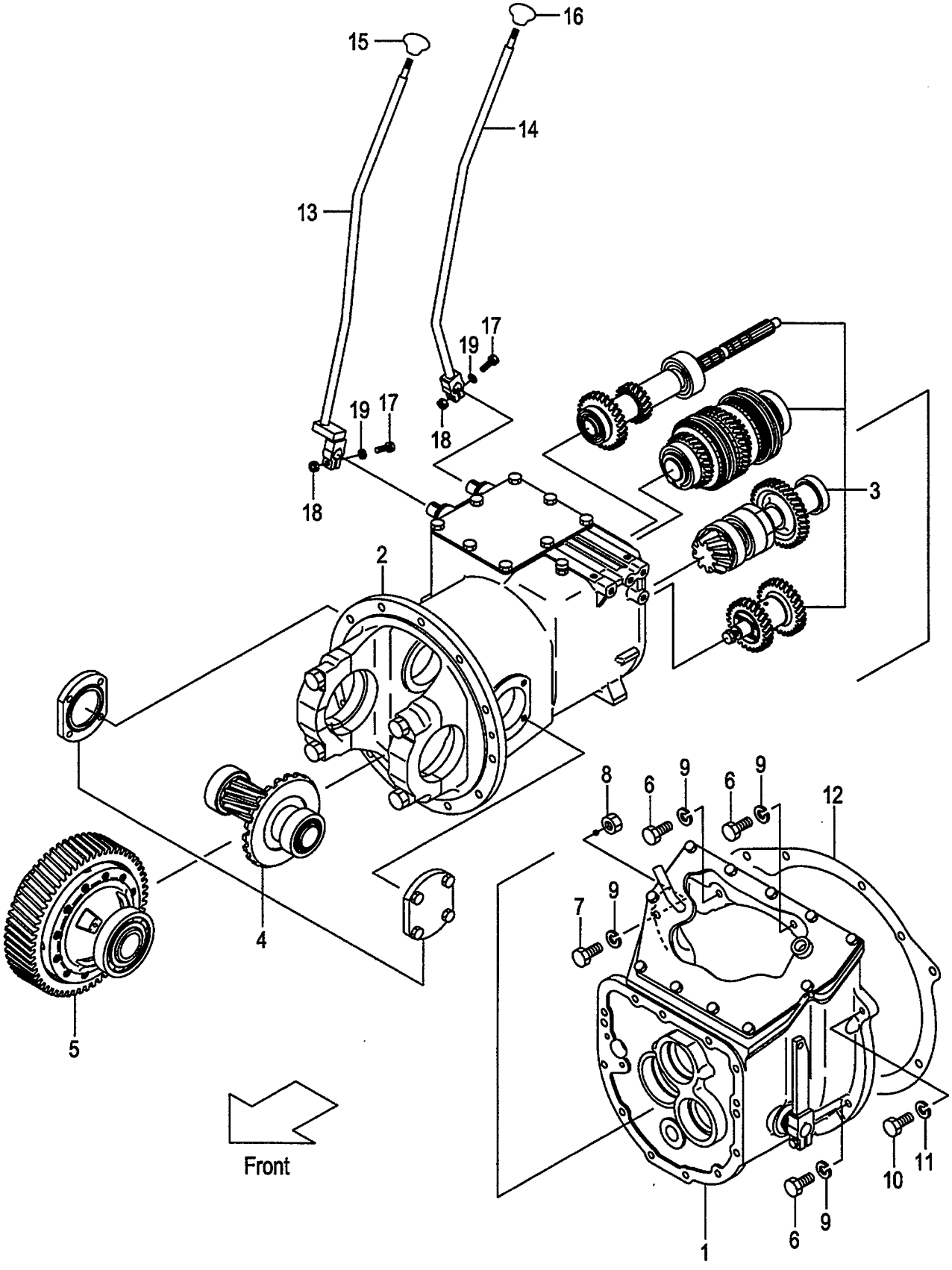

A:FD20W7 FD25W7

Item No	Part No.	Mark	Description		Req'd	Remarks : Serial No.
A1	136S2-50002		UNIT-ASSY,DRIVE	ﾄﾞﾗｲﾌﾞﾕﾆｯﾄｱｯｾﾝ	1	INC.1-5
1	NO PART NO.		CLUTCH	ｸﾗｯﾁ	1	SEE FIG.75
2	NO PART NO.		CASE,T/M	ｹｰｽ	1	SEE FIG.64
3	NO PART NO.		GEAR,T/M	ｷﾞﾔｰ	1	SEE FIG.65
4	NO PART NO.		REDUCTION	ﾘﾀﾞｸｼｮﾝ	1	SEE FIG.72
5	NO PART NO.		DIFFERENTIAL	ﾃﾞﾌｧﾚﾝｼｬﾙ	1	SEE FIG.73
6	01103-10035		BOLT	ﾎﾞﾙﾄ	3	
7	01103-10050		BOLT	ﾎﾞﾙﾄ	4	
8	01400-00010		NUT	ﾅｯﾄ	4	
9	02011-00010		WASHER	ﾜｯｼｬ	7	
10	01103-08040		BOLT	ﾎﾞﾙﾄ	1	
11	02011-00008		WASHER	ﾜｯｼｬ	1	
12	242S2-52001		GASKET	ｶﾞｽｹｯﾄ	1	
13	239A2-52001		LEVER,SPEED	ﾚﾊﾞｰ	1	
-	539A2-32001		LEVER,SPEED	ﾚﾊﾞｰ	1	[LCR]
14	239A2-52061		LEVER,DIRECTION	ﾚﾊﾞｰ	1	
-	539A2-32041		LEVER,DIRECTION	ﾚﾊﾞｰ	1	[LCR]
15	214A2-52002		KNOB,SPEED	ﾉﾌﾞ	1	
16	214A2-52012		KNOB,DIRECTION	ﾉﾌﾞ	1	
17	01100-08045		BOLT	ﾎﾞﾙﾄ	2	
18	01400-00008		NUT	ﾅｯﾄ	2	
19	02010-00008		WASHER	ﾜｯｼｬ	2	

FIG.75 CLUTCH (OIL CLUTCH)

(F60225K0) クラッチ

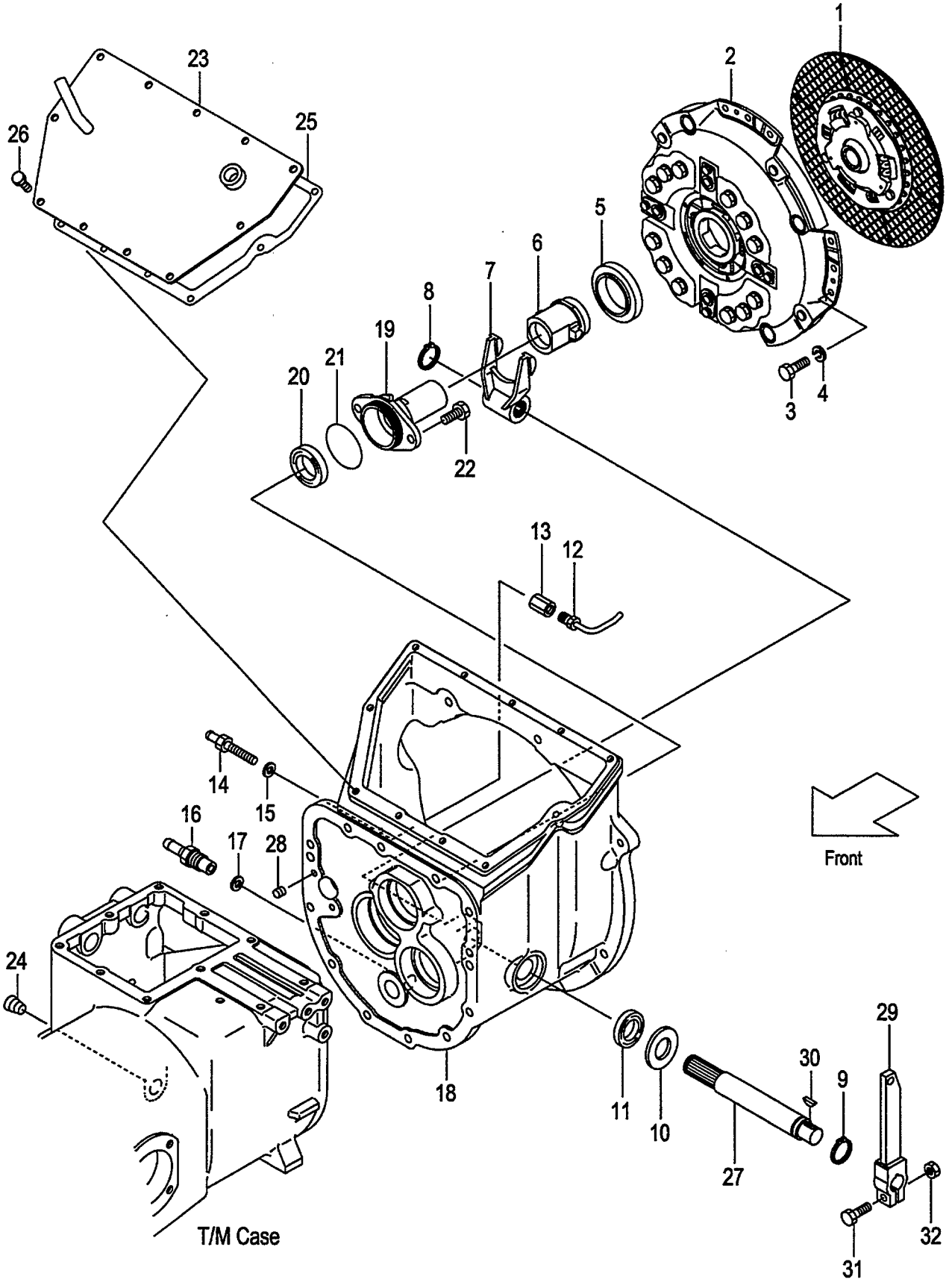

A:FD20W7 FD25W7

Item No	Part No.	Mark	Description		Req'd	Remarks : Serial No.
1	134H3-10211		DISK,CLUTCH	ﾃﾞｨｽｸ	1	
2	134H3-10201		COVER,CLUTCH	ｶﾊﾞｰ	1	
3	01103-08016		BOLT	ﾎﾞﾙﾄ	12	
4	02011-00008		WASHER	ﾜｯｼｬ	12	
5	55593-62061		BRG,THRUST	ﾍﾞｱﾘﾝｸﾞ	1	
6	134H3-12022		RETAINER,BRG	ﾘﾃｰﾅ	1	
7	114A3-12012		YOKE	ﾖｰｸ	1	
8	02100-00025		RING,SNAP	ｽﾅｯﾌﾟﾘﾝｸﾞ	1	
9	02100-00028		RING,SNAP	ｽﾅｯﾌﾟﾘﾝｸﾞ	1	
10	02000-00027		WASHER	ﾜｯｼｬ	1	
11	19502-52551		SEAL,OIL	ｼｰﾙ	1	
12	131N3-12011		NOZZLE,SPRAY	ﾉｽﾞﾙ	1	
13	131N3-12031		ADAPTER	ｱﾀﾞﾌﾟﾀ	1	
14	131N3-12041		NIPPLE	ﾆｯﾌﾟﾙ	1	
15	15943-82701		WASHER	ﾜｯｼｬ	1	
16	131N3-12151		FITTING,HOSE	ﾌｨｯﾃｨﾝｸﾞ	1	
17	22197-52091		WASHER	ﾜｯｼｬ	1	
18	142S3-12001		HOUSING,CLUTCH	ﾊｳｼﾞﾝｸﾞ	1	
19	134A3-12021		SUPPORT,RETAINER	ｻﾎﾟｰﾄ	1	
20	134H3-12011		SEAL,OIL	ｼｰﾙ	1	
21	03310-00600		O-RING	Oﾘﾝｸﾞ	1	
22	01213-10025		BOLT	ﾎﾞﾙﾄ	2	
23	131N3-12101		COVER,CLUTCH-HOUSING	ｶﾊﾞｰ	1	
24	12163-82541		PLUG	ﾌﾟﾗｸﾞ	1	
25	524G3-62121		GASKET	ｶﾞｽｹｯﾄ	1	
26	01183-08016		BOLT	ﾎﾞﾙﾄ	11	
27	114L3-12022		SHAFT	ｼｬﾌﾄ	1	
28	01066-08008		PLUG	ﾌﾟﾗｸﾞ	2	
29	114L3-12031		ARM	ｱｰﾑ	1	
30	02360-05019		KEY	ｷｰ	1	
31	01183-08035		BOLT	ﾎﾞﾙﾄ	1	
32	01400-00008		NUT	ﾅｯﾄ	1	

FIG.76 DRIVE AXLE

(F6023010) ﾄﾞﾗｲﾌﾞｱｸｽﾙ

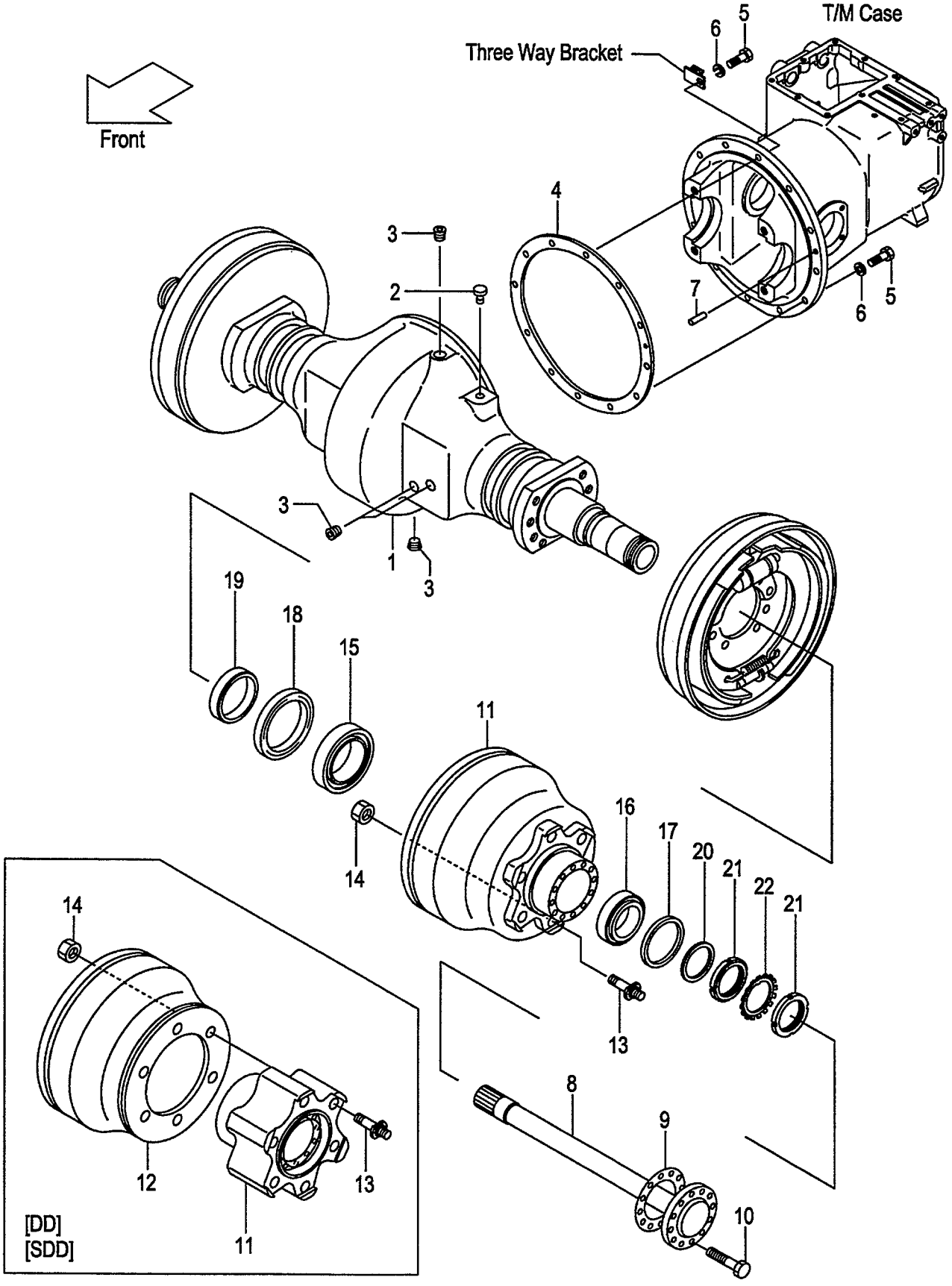

A:FD20C18 FD20T18 FD25C18 FD25T18
B:FD20C7 FD20T7 FD25C7 FD25T7 FD20W7 FD25W7

Item No	Part No.	Mark	Description		Req'd	Remarks : Serial No.
1	214A3-00301		HOUSING,AXLE	ﾊｳｼﾞﾝｸﾞ	1	
-	534A7-52011		HOUSING,AXLE	ﾊｳｼﾞﾝｸﾞ	1	[SM][SAS]
2	15573-42151		BREATHER,AIR	ﾌﾞﾘｰｻﾞ	1	
3	22193-03001		PLUG	ﾌﾟﾗｸﾞ	4	
4	24452-52002		PACKING	ﾊﾟｯｷﾝｸﾞ	1	
5	01106-12040		BOLT	ﾎﾞﾙﾄ	12	
6	02011-00012		WASHER	ﾜｯｼｬ	12	
7	02212-10020		PIN,PARALLEL	ﾋﾟﾝ	1	
8	214A3-02011		SHAFT,DRIVE	ｼｬﾌﾄ	2	
9	24453-02102		PACKING	ﾊﾟｯｷﾝｸﾞ	2	
10	24453-02061		BOLT,REAMER	ﾎﾞﾙﾄ	24	
11	239A3-02001		HUB & DRUM	ﾊﾌﾞ&ﾄﾞﾗﾑ	2	
-	514A7-42002		HUB,FRONT	ﾊﾌﾞ	2	[DD][SDD]
12	53657-42081		DRUM,BRAKE	ﾄﾞﾗﾑ	2	[DD][SDD]
13	24353-72001		BOLT,HUB	ﾎﾞﾙﾄ	12	
-	53657-42091		BOLT,HUB	ﾎﾞﾙﾄ	12	[DD][SDD]
14	01400-10020		NUT	ﾅｯﾄ	12	
15	03071-30214		BRG,TAPER-ROLLER	ﾍﾞｱﾘﾝｸﾞ	2	
16	23453-02071		BRG,TAPER-ROLLER	ﾍﾞｱﾘﾝｸﾞ	2	INC.17
17	23453-02131		SEAL,OIL	ｼｰﾙ	2	
18	23653-02001		SEAL,OIL	ｼｰﾙ	2	
19	24453-02121		RETAINER	ﾘﾃｰﾅ	2	
20	23453-02091		WASHER	ﾜｯｼｬ	2	
21	03192-00012		NUT,BRG	ﾅｯﾄ	4	
22	03192-10012		WASHER,BRG	ﾜｯｼｬ	2	

FIG.77 WHEEL BRAKE

(F6023710) ホイールブレーキ

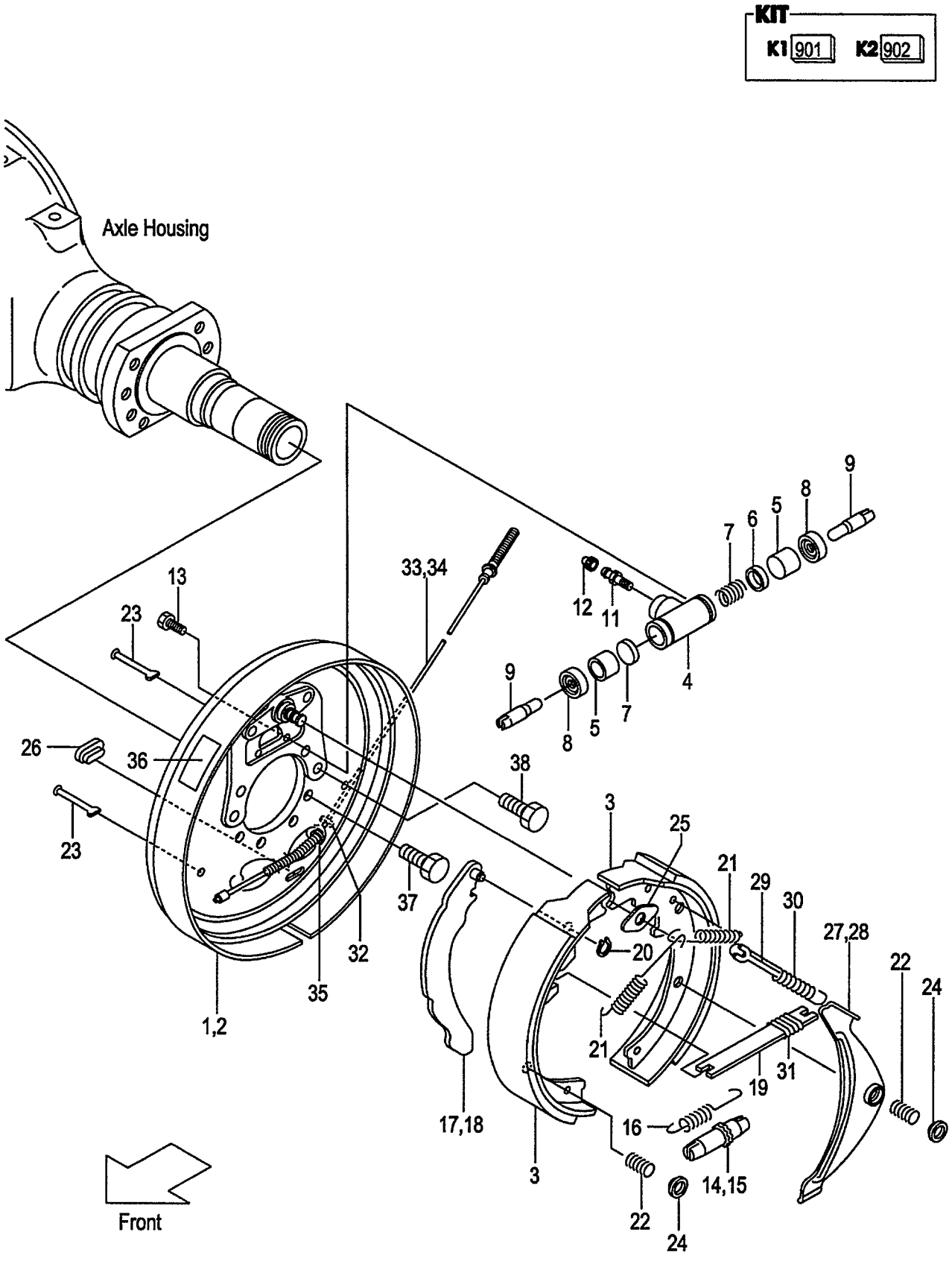

A:FD20C18 FD20T18 FD25C18 FD25T18
B:FD20C7 FD20T7 FD25C7 FD25T7 FD20W7 FD25W7

Item No	Part No.	Mark	Description		Req'd	Remarks : Serial No.
A1	522A2-60553		BRAKE-ASSY,RH	ﾌﾞﾚｰｷｱｯｾﾝ	1	INC.1,3-14,16,17,19-27, 19-33,35,36
A2	522A2-60563		BRAKE-ASSY,LH	ﾌﾞﾚｰｷｱｯｾﾝ	1	INC.2-13,15,16,18-26,28-32, 34-36
901	522A2-61561	K1	KIT,BRAKE-SHOE	ﾌﾞﾚｰｷｼｭｰｷｯﾄ	2	INC.3
1	234A3-72021		PLATE,BACK,RH	ﾌﾟﾚｰﾄ	1	
2	234A3-72031		PLATE,BACK,LH	ﾌﾟﾚｰﾄ	1	
3	NO PART NO.	#*	SHOE,BRAKE	ｼｭｰ	4	
A3	234A3-72001		CYL-ASSY,WHEEL	ﾎｲｰﾙｼﾘﾝﾀﾞｱｯｾﾝ	2	INC.4-12
4	NO PART NO.	#	BODY,WHEEL-CYL	ﾎﾞﾃﾞｨ	2	
5	NO PART NO.	#*	PISTON	ﾋﾟｽﾄﾝ	4	
6	NO PART NO.	#*	CUP,PISTON	ｶｯﾌﾟ	4	
7	NO PART NO.	#*	SPRING	ｽﾌﾟﾘﾝｸﾞ	2	
8	NO PART NO.	#*	COVER,DUST	ｶﾊﾞｰ	4	
9	22673-72111		ROD,PISTON	ﾛｯﾄﾞ	4	
10	22673-72121	+	SEAT,TUBE	ｼｰﾄ	2	
11	22673-72131		SCREW,BLEEDER	ｽｸﾘｭ	2	
12	22673-72141		CAP,BLEEDER-SCREW	ｷｬｯﾌﾟ	2	
13	22673-72161		BOLT	ﾎﾞﾙﾄ	4	
14	23653-72031		ADJUSTER,RH	ｱｼﾞｬｽﾀ	1	
15	23653-72041		ADJUSTER,LH	ｱｼﾞｬｽﾀ	1	
16	23653-72051		SPRING,ADJUSTER	ｽﾌﾟﾘﾝｸﾞ	2	
17	23653-72062		LEVER,BRAKE,RH	ﾚﾊﾞｰ	1	
18	23653-72072		LEVER,BRAKE,LH	ﾚﾊﾞｰ	1	
19	23653-72081		STRUT	ｽﾄﾗｯﾄ	2	
20	22673-72252		RETAINER	ﾘﾃｰﾅ	2	
21	22673-72261		SPRING,SHOE-RETURN	ｽﾌﾟﾘﾝｸﾞ	4	
22	23653-72091		SPRING,SHOE-HOLD	ｽﾌﾟﾘﾝｸﾞ	8	
23	23653-72101		PIN,SHOE-HOLD	ﾋﾟﾝ	8	
24	23653-72111		CUP,WASHER	ｶｯﾌﾟ	8	
25	23653-72131		PLATE,SHOE-GUIDE	ﾌﾟﾚｰﾄ	2	
26	22673-72321		PLUG,RUBBER	ﾌﾟﾗｸﾞ	2	
27	23653-72141		LEVER,PAWL,RH	ﾚﾊﾞｰ	1	
28	23653-72151		LEVER,PAWL,LH	ﾚﾊﾞｰ	1	
29	23653-72161		STOPPER,PAWL-LEVER	ｽﾄｯﾊﾟ	2	
30	23653-72171		SPRING,ACTUATOR	ｽﾌﾟﾘﾝｸﾞ	2	
31	22673-72391		SPRING,ANTIRATTLE	ｽﾌﾟﾘﾝｸﾞ	2	
32	22673-72411		PACKING,RUBBER	ﾊﾟｯｷﾝｸﾞ	2	
33	222A3-72011		CABLE,CONTROL,RH	ｹｰﾌﾞﾙ	1	
34	222A3-72021		CABLE,CONTROL,LH	ｹｰﾌﾞﾙ	1	
35	23653-72201		RETAINER	ﾘﾃｰﾅ	2	
36	NO PART NO.		DECAL,CAUTION	ﾃﾞｶﾙ	2	
37	214A3-02001		BOLT	ﾎﾞﾙﾄ	12	
38	25953-72001		BOLT,DISC	ﾎﾞﾙﾄ	4	

FIG.78 STEERING WHEEL UNIT

(F6024110) ステアリング゛ホイールユニット

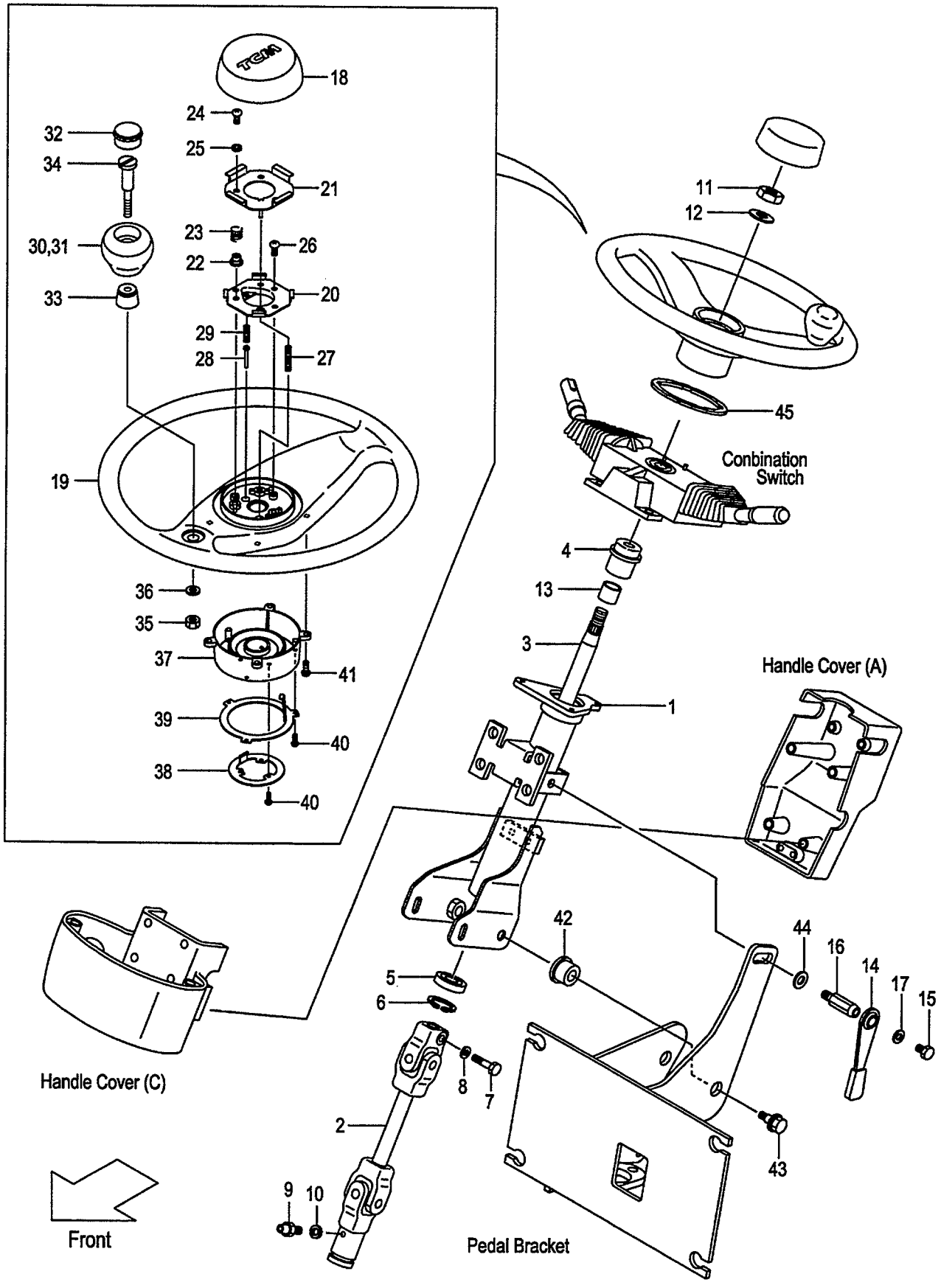

A:FD20C18 FD20T18 FD25C18 FD25T18
B:FD20C7 FD20T7 FD25C7 FD25T7 FD20W7 FD25W7

FIG.78
(F6024110)

Item No	Part No.	Mark	Description		Req'd	Remarks : Serial No.
A1	239A4-12102		SHAFT-ASSY,STEERING	ｽﾃｱﾘﾝｸﾞｼｬﾌﾄｱｯｾﾝ	1	INC.1-13
1	239A4-12112		COLUMN	ｺﾗﾑ	1	
2	239A4-12121		JOINT,UNIVERSAL	ｼﾞｮｲﾝﾄ	1	
3	239A4-12131		SHAFT	ｼｬﾌﾄ	1	
4	NO PART NO.		BUSHING,COLUMN	ﾌﾞｯｼﾝｸﾞ	1	
5	NO PART NO.		BRG,BALL	ﾍﾞｱﾘﾝｸﾞ	1	
6	NO PART NO.		RING,SNAP	ｽﾅｯﾌﾟﾘﾝｸﾞ	1	
7	NO PART NO.		BOLT	ﾎﾞﾙﾄ	1	
8	NO PART NO.		WASHER	ﾜｯｼｬ	1	
9	NO PART NO.		FITTING	ﾌｨｯﾃｨﾝｸﾞ	1	
10	NO PART NO.		WASHER	ﾜｯｼｬ	1	
11	01402-00014		NUT	ﾅｯﾄ	1	
12	14354-12271		WASHER	ﾜｯｼｬ	1	
13	NO PART NO.		BUSHING,DU	ﾌﾞｯｼﾝｸﾞ	1	
A2	239A4-12402		LEVER-ASSY,TILT-LOCK	ﾃｨﾙﾄﾛｯｸﾚﾊﾞｰｱｯｾﾝ	1	INC.14-17
14	239A4-12411		LEVER	ﾚﾊﾞｰ	1	
15	239A4-12441		BOLT	ﾎﾞﾙﾄ	1	
16	239A4-12431		BOLT,LOCK	ﾎﾞﾙﾄ	1	
17	214A4-12161		WASHER	ﾜｯｼｬ	1	
A3	209K4-10801		WHEEL-ASSY,STEERING	ｽﾃｱﾘﾝｸﾞﾎｲｰﾙｱｯｾﾝ	1	INC.18-41
18	216G4-12761		PAD,HORN	ﾊﾟｯﾄﾞ	1	
19	209K4-12561		WHEEL,STEERING	ﾎｲｰﾙ	1	
A4	271F4-12221		SWITCH-ASSY	ｽｲｯﾁｱｯｾﾝ	1	INC.20-25
20	NO PART NO.	#	PLATE,CONTACT,A	ﾌﾟﾚｰﾄ	1	
21	NO PART NO.	#	PLATE,CONTACT,B	ﾌﾟﾚｰﾄ	1	
22	216G4-12601		INSULATOR	ｲﾝｼｭﾚｰﾀ	3	
23	216G4-12611		SPRING,HORN	ｽﾌﾟﾘﾝｸﾞ	3	
24	216G4-12621		SCREW	ｽｸﾘｭ	3	
25	216G4-12631		WASHER,FIVER	ﾜｯｼｬ	3	
26	216G4-12641		SCREW	ｽｸﾘｭ	2	
27	216G4-12661		SPRING,EARTH	ｽﾌﾟﾘﾝｸﾞ	1	
28	271F4-12231		PLUNGER	ﾌﾟﾗﾝｼﾞｬ	1	
29	271F4-12241		SPRING,PLUNGER	ｽﾌﾟﾘﾝｸﾞ	1	
A5	216G4-12681		KNOB-ASSY	ﾉﾌﾞｱｯｾﾝ	1	INC.30-36
30	NO PART NO.	#	KNOB	ﾉﾌﾞ	1	
31	NO PART NO.	#	INSERT,KNOB	ｲﾝｻｰﾄ	1	
32	216G4-12711		CAP	ｷｬｯﾌﾟ	1	
33	NO PART NO.	#	BUSHING	ﾌﾞｯｼﾝｸﾞ	1	
34	NO PART NO.	#	SHAFT	ｼｬﾌﾄ	1	
35	216G4-12741		NUT	ﾅｯﾄ	1	
36	216G4-12751		WASHER	ﾜｯｼｬ	1	
37	209K4-12541		COVER,CANCEL-CAM	ｶﾊﾞｰ	1	
38	209K4-12531		RING,CONTACT,A	ﾘﾝｸﾞ	1	
39	209K4-12521		RING,CONTACT,B	ﾘﾝｸﾞ	1	
40	209K4-12511		SCREW	ｽｸﾘｭ	6	
41	209K4-12501		SCREW	ｽｸﾘｭ	4	
42	216G4-12101		BUSHING	ﾌﾞｯｼﾝｸﾞ	2	
43	216G4-12111		BOLT	ﾎﾞﾙﾄ	2	
44	02000-00012		WASHER	ﾜｯｼｬ	1	
45	209P4-12111		RUBBER,HANDLE-WHEEL	ﾗﾊﾞｰ	1	

FIG.79 GEAR BOX

(F6024120) ｷﾞﾔｰﾎﾞｯｸｽ

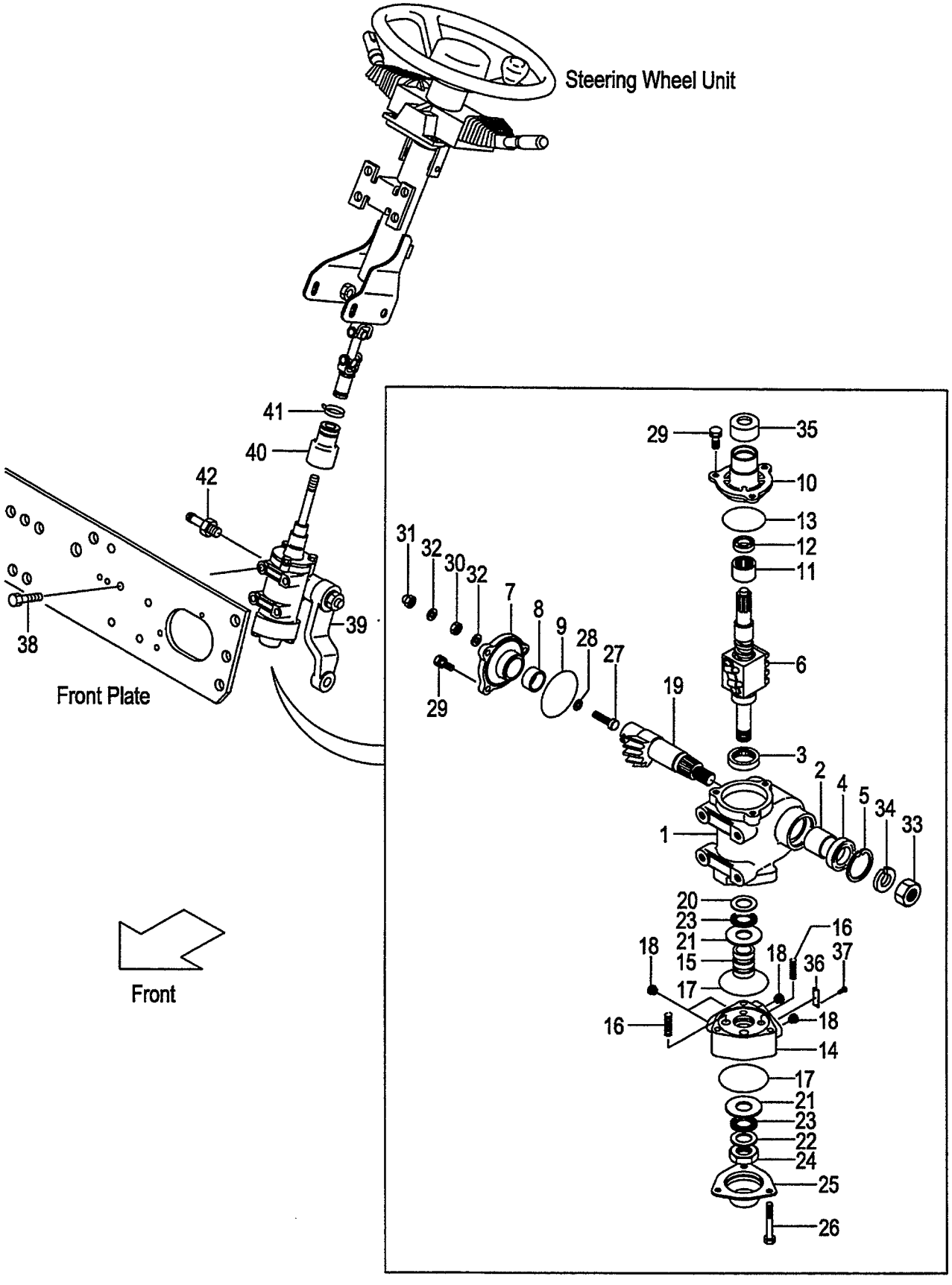

A:FD20C18 FD20T18 FD25C18 FD25T18
B:FD20C7 FD20T7 FD25C7 FD25T7 FD20W7 FD25W7

FIG.79
(F6024120)

Item No	Part No.	Mark	Description		Req'd	Remarks : Serial No.
A1	239A4-12201		BOX-ASSY,GEAR	ｷﾞﾔｰﾎﾞｯｸｽｱｯｾﾝ	1	INC.1-37
A2	B-23643-00526		CASE-ASSY,GEAR	ｷﾞﾔｰｹｰｽｱｯｾﾝ	1	INC.1-5
1	NO PART NO.	#	CASE,GEAR	ｹｰｽ	1	
2	B-23641-03716		BUSHING	ﾌﾞｯｼﾝｸﾞ	1	
3	B-23451-02016		BRG,RADIAL	ﾍﾞｱﾘﾝｸﾞ	1	
4	B-23711-01922		SEAL,OIL	ｼｰﾙ	1	
5	B-94721-38151		RING,SNAP	ｽﾅｯﾌﾟﾘﾝｸﾞ	1	
6	B-B3613-13001		SCREW,BALL	ｽｸﾘｭ	1	
A3	B-23642-00911		COVER-ASSY,SIDE	ｶﾊﾞｰｱｯｾﾝ	1	INC.7-9
7	NO PART NO.	#	COVER,SIDE	ｶﾊﾞｰ	1	
8	B-23641-03716		BUSHING	ﾌﾞｯｼﾝｸﾞ	1	
9	B-95121-06000		O-RING	Oﾘﾝｸﾞ	1	
A4	B-23643-00618		COVER-ASSY,TOP	ﾄｯﾌﾟｶﾊﾞｰｱｯｾﾝ	1	INC.10-13
10	NO PART NO.	#	COVER,TOP	ｶﾊﾞｰ	1	
11	NO PART NO.	#	BRG,RADIAL	ﾍﾞｱﾘﾝｸﾞ	1	
12	NO PART NO.	#	SEAL,OIL	ｼｰﾙ	1	
13	B-95121-06000		O-RING	Oﾘﾝｸﾞ	1	
A5	B-23643-00296		HOUSING-ASSY,VALAE	ﾊﾞﾙﾌﾞﾊｳｼﾞﾝｸﾞｱｯｾﾝ	1	INC.14-18
14	NO PART NO.	#	HOUSING,VALVE	ﾊｳｼﾞﾝｸﾞ	1	
15	NO PART NO.	#	SPOOL	ｽﾌﾟｰﾙ	1	
16	14354-12321		SPRING	ｽﾌﾟﾘﾝｸﾞ	4	
17	B-95151-06300		O-RING	Oﾘﾝｸﾞ	2	
18	25594-52141		FERRULE	ﾌｪﾙｰﾙ	4	
19	B-23641-00313		SHAFT,SECTOR	ｼｬﾌﾄ	1	
20	B-23641-01609		RACE,THRUST	ﾚｰｽ	1	
21	B-23641-01610		RACE,THRUST	ﾚｰｽ	2	
22	B-23451-02212		RACE,THRUST	ﾚｰｽ	1	
23	B-23451-02106		BRG,THRUST	ﾍﾞｱﾘﾝｸﾞ	2	
24	B-23641-02227		NUT	ﾅｯﾄ	1	
25	B-23641-02508		COVER,END	ｶﾊﾞｰ	1	
26	B-23641-03314		BOLT	ﾎﾞﾙﾄ	3	
27	14354-12211		SCREW,ADJUST	ｽｸﾘｭ	1	
28	14354-12221		SHIM,ADJUST-SCREW	ｼﾑ	1	
29	B-23711-03701		BOLT	ﾎﾞﾙﾄ	6	
30	01402-10010		NUT	ﾅｯﾄ	1	
31	14354-12261		NUT,CAP	ﾅｯﾄ	1	
32	14354-12251		PACKING	ﾊﾟｯｷﾝｸﾞ	2	
33	B-23641-02218		NUT	ﾅｯﾄ	1	
34	B-94101-20512		WASHER	ﾜｯｼｬ	1	
35	B-23641-04303		COVER,DUST	ｶﾊﾞｰ	1	
36	NO PART NO.	#	PLATE,NAME	ﾌﾟﾚｰﾄ	1	
37	NO PART NO.	#	SCREW,DRIVE	ｽｸﾘｭ	2	
38	01184-12030		BOLT	ﾎﾞﾙﾄ	4	
39	239A4-22001		ARM,PITMAN	ｱｰﾑ	1	
40	239A4-12211		BOOT,GEAR-BOX	ﾌﾞｰﾂ	1	
41	04913-11200		BAND	ﾊﾞﾝﾄﾞ	1	
42	25597-62211		NIPPLE	ﾆｯﾌﾟﾙ	1	

FIG.80 ORBITROL [EXC][EXE][EXK][EXN][OBT]

(F6024130) オービットロール

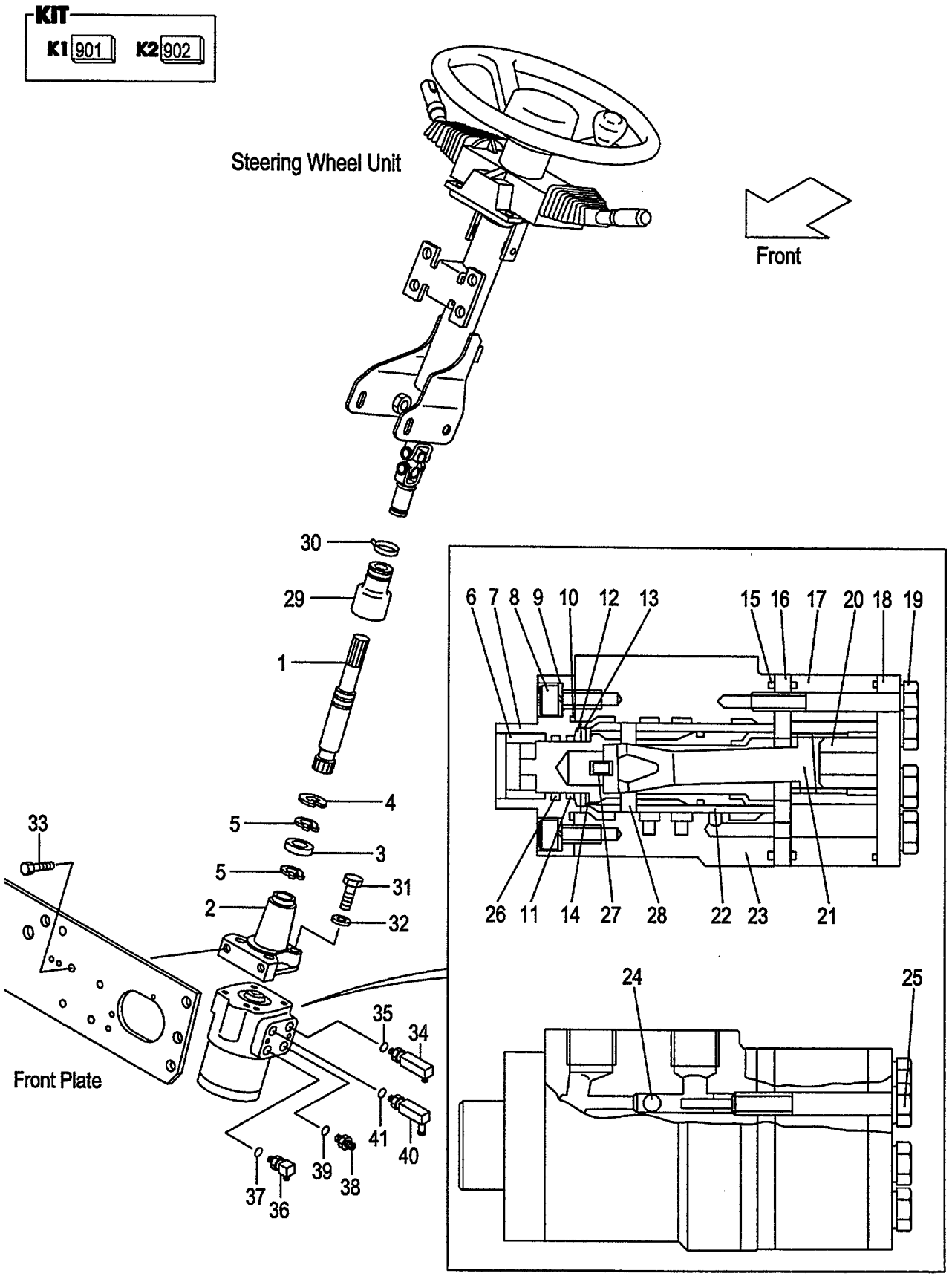

A:FD20C7 FD20T7 FD25C7 FD25T7

Item No	Part No.	Mark	Description		Req'd	Remarks : Serial No.
1	539A2-42001		SHAFT,HANDLE	ｼｬﾌﾄ	1	[EXC][EXE][EXK][EXN][OBT] [EXB/OBT]
2	539A2-42011		FLANGE	ﾌﾗﾝｼﾞ	1	[EXC][EXE][EXK][EXN][OBT] [EXB/OBT]
3	03010-06904		BRG,BALL	ﾍﾞｱﾘﾝｸﾞ	1	[EXC][EXE][EXK][EXN][OBT] [EXB/OBT]
4	02110-00037		RING,SNAP	ｽﾅｯﾌﾟﾘﾝｸﾞ	1	[EXC][EXE][EXK][EXN][OBT] [EXB/OBT]
5	02100-00020		RING,SNAP	ｽﾅｯﾌﾟﾘﾝｸﾞ	2	[EXC][EXE][EXK][EXN][OBT] [EXB/OBT]
A1	HC32G4-10101		UNIT-ASSY,ORBITROL	ｵｰﾋﾞｯﾄﾛｰﾙﾕﾆｯﾄｱｯｾﾝ	1	[EXC][EXE][EXK][EXN][OBT] [EXB/OBT] INC.6-28
901	HC516G2-42411	K1	KIT,SEAL	ｼｰﾙｷｯﾄ	1	[EXC][EXE][EXK][EXN][OBT] [EXB/OBT] INC.10,11,15,26
902	HC26094-17021	K2	KIT,BRG,NEEDLE	ﾆｰﾄﾞﾙﾍﾞｱﾘﾝｸﾞｷｯﾄ	1	[EXC][EXE][EXK][EXN][OBT] [EXB/OBT] INC.12-14
6	NO PART NO.	#	BUSHING	ﾌﾞｯｼﾝｸﾞ	1	[EXC][EXE][EXK][EXN][OBT] [EXB/OBT]
7	NO PART NO.	#	CAP,FRONT	ｷｬｯﾌﾟ	1	[EXC][EXE][EXK][EXN][OBT] [EXB/OBT]
8	NO PART NO.	#	BOLT	ﾎﾞﾙﾄ	4	[EXC][EXE][EXK][EXN][OBT] [EXB/OBT]
9	NO PART NO.	#	WASHER	ﾜｯｼｬ	4	[EXC][EXE][EXK][EXN][OBT] [EXB/OBT]
10	NO PART NO.	#*	O-RING	Oﾘﾝｸﾞ	1	[EXC][EXE][EXK][EXN][OBT] [EXB/OBT]
11	NO PART NO.	#*	SEAL,OIL	ｼｰﾙ	1	[EXC][EXE][EXK][EXN][OBT] [EXB/OBT]
12	NO PART NO.	#*	RACE,BRG	ﾚｰｽ	1	[EXC][EXE][EXK][EXN][OBT] [EXB/OBT]
13	NO PART NO.	#*	BRG,NEEDLE	ﾍﾞｱﾘﾝｸﾞ	1	[EXC][EXE][EXK][EXN][OBT] [EXB/OBT]
14	NO PART NO.	#*	RACE,BRG	ﾚｰｽ	1	[EXC][EXE][EXK][EXN][OBT] [EXB/OBT]
15	NO PART NO.	#*	O-RING	Oﾘﾝｸﾞ	1	[EXC][EXE][EXK][EXN][OBT] [EXB/OBT]
16	NO PART NO.	#	SPACER	ｽﾍﾟｰｻ	1	[EXC][EXE][EXK][EXN][OBT] [EXB/OBT]
17	NO PART NO.	#	GEROTOR	ｼﾞﾛｰﾀ	1	[EXC][EXE][EXK][EXN][OBT] [EXB/OBT]
18	NO PART NO.	#	CAP,END	ｷｬｯﾌﾟ	1	[EXC][EXE][EXK][EXN][OBT] [EXB/OBT]
19	NO PART NO.	#	BOLT	ﾎﾞﾙﾄ	6	[EXC][EXE][EXK][EXN][OBT] [EXB/OBT]
20	NO PART NO.	#	SPACER	ｽﾍﾟｰｻ	1	[EXC][EXE][EXK][EXN][OBT] [EXB/OBT]
21	NO PART NO.	#	SHAFT,DRIVE	ｼｬﾌﾄ	1	[EXC][EXE][EXK][EXN][OBT] [EXB/OBT]
22	NO PART NO.	#	SLEEVE	ｽﾘｰﾌﾞ	1	[EXC][EXE][EXK][EXN][OBT] [EXB/OBT]

FIG.80 ORBITROL [EXC][EXE][EXK][EXN][OBT]

(F6024130) オービットロール

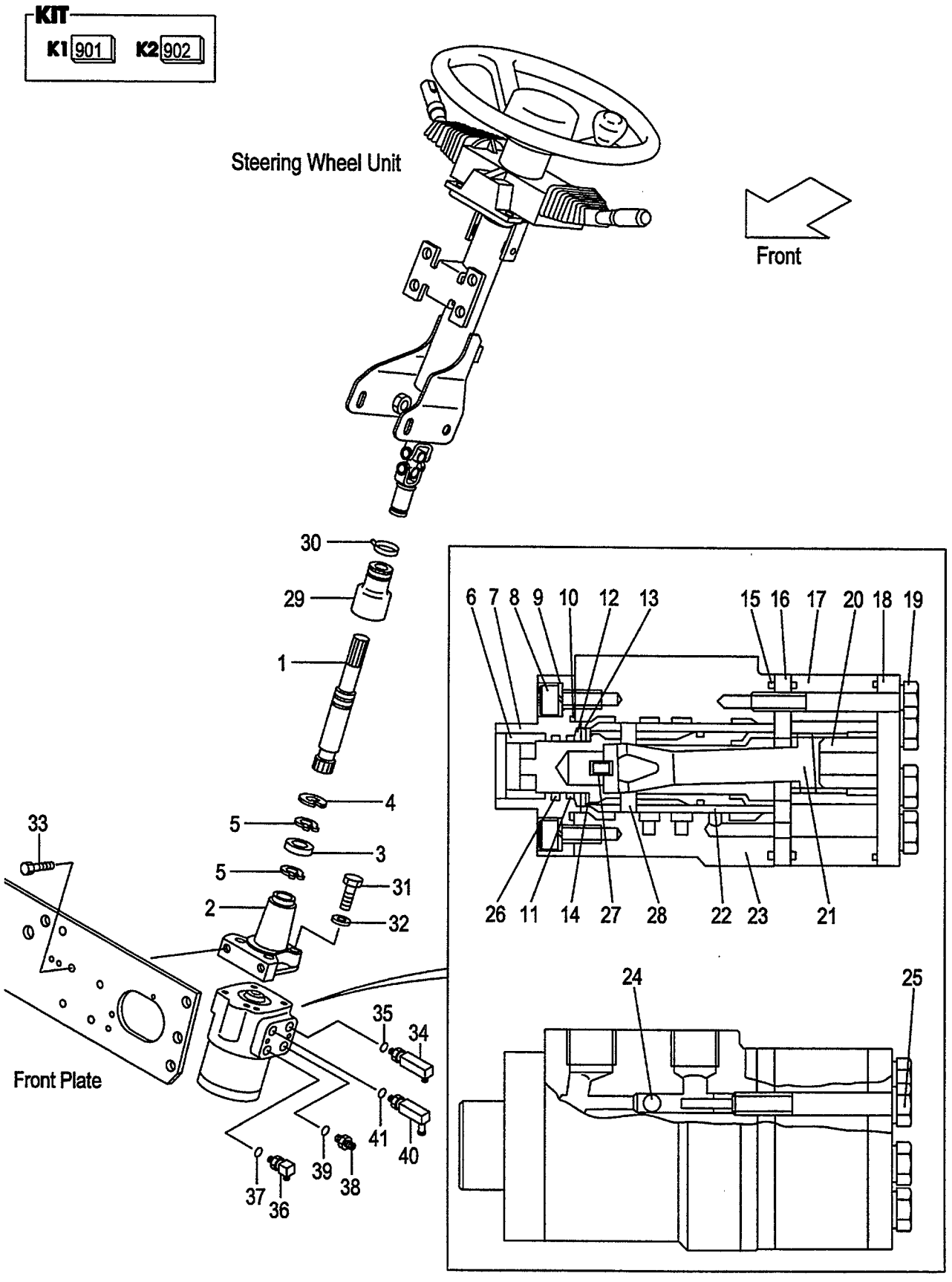

A:FD20C7 FD20T7 FD25C7 FD25T7

Item No	Part No.	Mark	Description		Req'd	Remarks : Serial No.
23	NO PART NO.	#	HOUSING	ﾊｳｼﾞﾝｸﾞ	1	[EXC][EXE][EXK][EXN][OBT] [EXB/OBT]
24	NO PART NO.	#	BALL,STEEL	ﾎﾞｰﾙ	1	[EXC][EXE][EXK][EXN][OBT] [EXB/OBT]
25	NO PART NO.	#	BOLT	ﾎﾞﾙﾄ	1	[EXC][EXE][EXK][EXN][OBT] [EXB/OBT]
26	NO PART NO.	#*	O-RING	Oﾘﾝｸﾞ	1	[EXC][EXE][EXK][EXN][OBT] [EXB/OBT]
27	NO PART NO.	#	SPRING	ｽﾌﾟﾘﾝｸﾞ	1	[EXC][EXE][EXK][EXN][OBT] [EXB/OBT]
28	NO PART NO.	#	PIN	ﾋﾟﾝ	1	[EXC][EXE][EXK][EXN][OBT] [EXB/OBT]
29	239A4-12211		BOOT,GEAR-BOX	ﾌﾞｰﾂ	1	[EXC][EXE][EXK][EXN][OBT] [EXB/OBT]
30	04913-11200		BAND	ﾊﾞﾝﾄﾞ	1	[EXC][EXE][EXK][EXN][OBT] [EXB/OBT]
31	80110-00628		BOLT	ﾎﾞﾙﾄ	4	[EXC][EXE][EXK][EXN][OBT] [EXB/OBT]
32	80430-00006		WASHER	ﾜｯｼｬ	4	[EXC][EXE][EXK][EXN][OBT] [EXB/OBT]
33	216G4-12251		BOLT	ﾎﾞﾙﾄ	2	[EXC][EXE][EXK][EXN][OBT] [EXB/OBT]
A2	23457-60301		ELBOW-ASSY	ｴﾙﾎﾞｱｯｾﾝ	1	[EXC][EXE][EXK][EXN][OBT] [EXB/OBT] INC.34,35
34	NO PART NO.	#	ELBOW	ｴﾙﾎﾞ	1	[EXC][EXE][EXK][EXN][OBT] [EXB/OBT]
35	89140-00006		O-RING	Oﾘﾝｸﾞ	1	[EXC][EXE][EXK][EXN][OBT] [EXB/OBT]
A3	23457-60311		ELBOW-ASSY	ｴﾙﾎﾞｱｯｾﾝ	1	[EXC][EXE][EXK][EXN][OBT] [EXB/OBT] INC.36,37
36	NO PART NO.	#	ELBOW	ｴﾙﾎﾞ	1	[EXC][EXE][EXK][EXN][OBT] [EXB/OBT]
37	89140-00006		O-RING	Oﾘﾝｸﾞ	1	[EXC][EXE][EXK][EXN][OBT] [EXB/OBT]
A4	22197-60231		NIPPLE-ASSY	ﾆｯﾌﾟﾙｱｯｾﾝ	1	[EXC][EXE][EXK][EXN][OBT] [EXB/OBT] INC.38,39
38	NO PART NO.	#	NIPPLE	ﾆｯﾌﾟﾙ	1	[EXC][EXE][EXK][EXN][OBT] [EXB/OBT]
39	89140-00006		O-RING	Oﾘﾝｸﾞ	1	[EXC][EXE][EXK][EXN][OBT] [EXB/OBT]
A5	516G2-40451		ELBOW-ASSY	ｴﾙﾎﾞｱｯｾﾝ	1	[EXC][EXE][EXK][EXN][OBT] [EXB/OBT] INC.40,41
40	NO PART NO.	#	ELBOW	ｴﾙﾎﾞ	1	[EXC][EXE][EXK][EXN][OBT] [EXB/OBT]
41	89140-00006		O-RING	Oﾘﾝｸﾞ	1	[EXC][EXE][EXK][EXN][OBT] [EXB/OBT]

FIG.81 GEAR BOX [(EXC,EXE,EXK,EXN)/PSS]

(F6024140) ｷﾞﾔｰﾎﾞｯｸｽ

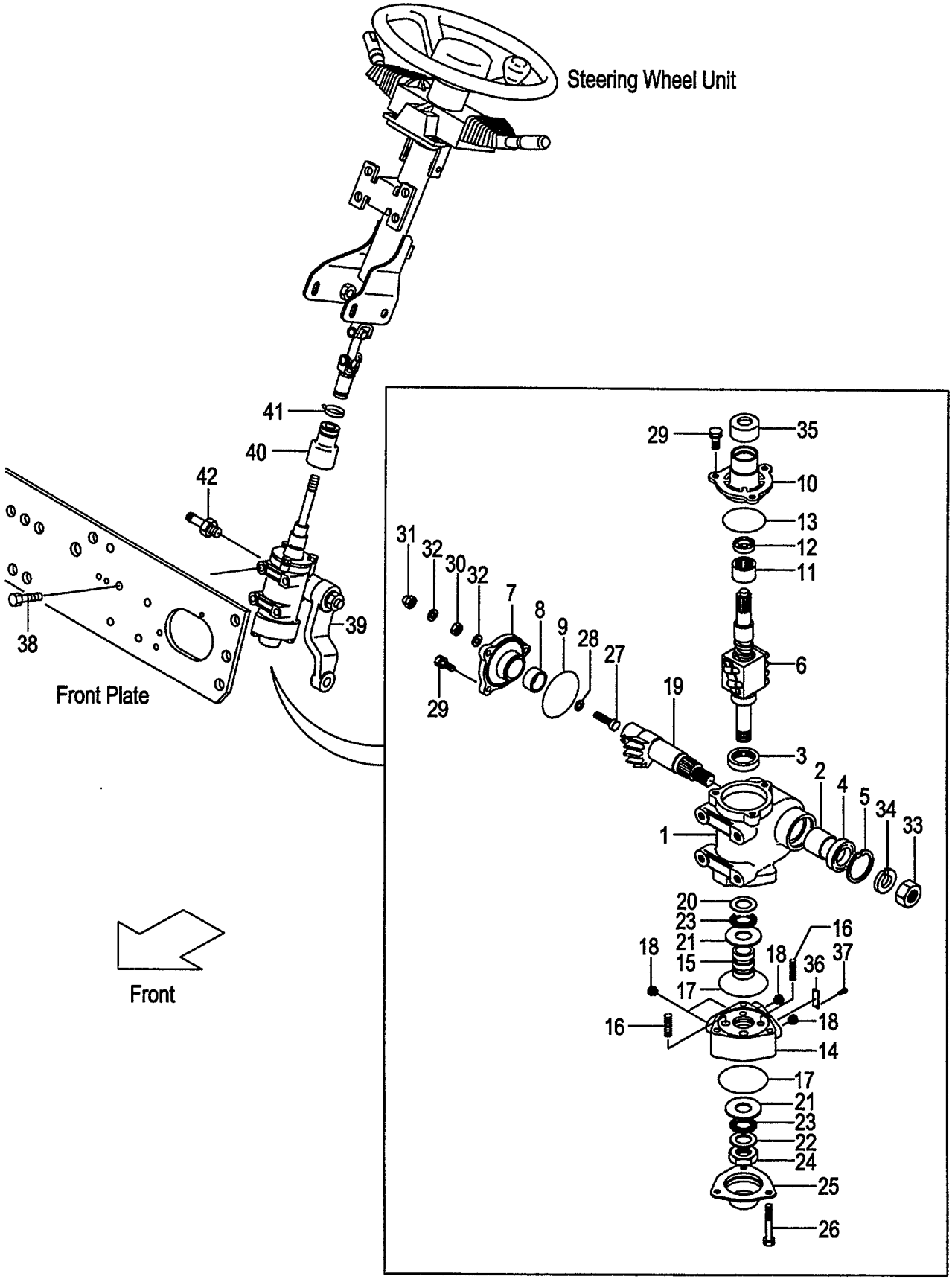

A:FD20C7 FD20T7 FD25C7 FD25T7

Item No	Part No.	Mark	Description		Req'd	Remarks : Serial No.
A1	239A4-12201		BOX-ASSY,GEAR	ｷﾞﾔｰﾎﾞｯｸｽｱｯｾﾝ	1	[EXC/PSS][EXE/PSS][EXK/PSS] [EXN/PSS] INC.1-37
A2	B-23643-00526		CASE-ASSY,GEAR	ｷﾞﾔｰｹｰｽｱｯｾﾝ	1	[EXC/PSS][EXE/PSS][EXK/PSS] [EXN/PSS] INC.1-5
1	NO PART NO.	#	CASE,GEAR	ｹｰｽ	1	[EXC/PSS][EXE/PSS][EXK/PSS] [EXN/PSS]
2	B-23641-03716		BUSHING	ﾌﾞｯｼﾝｸﾞ	1	[EXC/PSS][EXE/PSS][EXK/PSS] [EXN/PSS]
3	B-23451-02016		BRG,RADIAL	ﾍﾞｱﾘﾝｸﾞ	1	[EXC/PSS][EXE/PSS][EXK/PSS] [EXN/PSS]
4	B-23711-01922		SEAL,OIL	ｼｰﾙ	1	[EXC/PSS][EXE/PSS][EXK/PSS] [EXN/PSS]
5	B-94721-38151		RING,SNAP	ｽﾅｯﾌﾟﾘﾝｸﾞ	1	[EXC/PSS][EXE/PSS][EXK/PSS] [EXN/PSS]
6	B-B3613-13001		SCREW,BALL	ｽｸﾘｭ	1	[EXC/PSS][EXE/PSS][EXK/PSS] [EXN/PSS]
A3	B-23642-00911		COVER-ASSY,SIDE	ｶﾊﾞｰｱｯｾﾝ	1	[EXC/PSS][EXE/PSS][EXK/PSS] [EXN/PSS] INC.7-9
7	NO PART NO.	#	COVER,SIDE	ｶﾊﾞｰ	1	[EXC/PSS][EXE/PSS][EXK/PSS] [EXN/PSS]
8	B-23641-03716		BUSHING	ﾌﾞｯｼﾝｸﾞ	1	[EXC/PSS][EXE/PSS][EXK/PSS] [EXN/PSS]
9	B-95121-06000		O-RING	Oﾘﾝｸﾞ	1	[EXC/PSS][EXE/PSS][EXK/PSS] [EXN/PSS]
A4	B-23643-00618		COVER-ASSY,TOP	ﾄｯﾌﾟｶﾊﾞｰｱｯｾﾝ	1	[EXC/PSS][EXE/PSS][EXK/PSS] [EXN/PSS] INC.10-13
10	NO PART NO.	#	COVER,TOP	ｶﾊﾞｰ	1	[EXC/PSS][EXE/PSS][EXK/PSS] [EXN/PSS]
11	NO PART NO.	#	BRG,RADIAL	ﾍﾞｱﾘﾝｸﾞ	1	[EXC/PSS][EXE/PSS][EXK/PSS] [EXN/PSS]
12	NO PART NO.	#	SEAL,OIL	ｼｰﾙ	1	[EXC/PSS][EXE/PSS][EXK/PSS] [EXN/PSS]
13	B-95121-06000		O-RING	Oﾘﾝｸﾞ	1	[EXC/PSS][EXE/PSS][EXK/PSS] [EXN/PSS]
A5	B-23643-00296		HOUSING-ASSY,VALAE	ﾊﾞﾙﾌﾞﾊｳｼﾞﾝｸﾞｱｯｾﾝ	1	[EXC/PSS][EXE/PSS][EXK/PSS] [EXN/PSS] INC.14-18
14	NO PART NO.	#	HOUSING,VALVE	ﾊｳｼﾞﾝｸﾞ	1	[EXC/PSS][EXE/PSS][EXK/PSS] [EXN/PSS]
15	NO PART NO.	#	SPOOL	ｽﾌﾟｰﾙ	1	[EXC/PSS][EXE/PSS][EXK/PSS] [EXN/PSS]
16	14354-12321		SPRING	ｽﾌﾟﾘﾝｸﾞ	4	[EXC/PSS][EXE/PSS][EXK/PSS] [EXN/PSS]
17	B-95151-06300		O-RING	Oﾘﾝｸﾞ	2	[EXC/PSS][EXE/PSS][EXK/PSS] [EXN/PSS]
18	25594-52141		FERRULE	ﾌｪﾙｰﾙ	4	[EXC/PSS][EXE/PSS][EXK/PSS] [EXN/PSS]
19	B-23641-00313		SHAFT,SECTOR	ｼｬﾌﾄ	1	[EXC/PSS][EXE/PSS][EXK/PSS] [EXN/PSS]
20	B-23641-01609		RACE,THRUST	ﾚｰｽ	1	[EXC/PSS][EXE/PSS][EXK/PSS] [EXN/PSS]

FIG.81 GEAR BOX [(EXC,EXE,EXK,EXN)/PSS]

(F6024140) ｷﾞﾔｰﾎﾞｯｸｽ

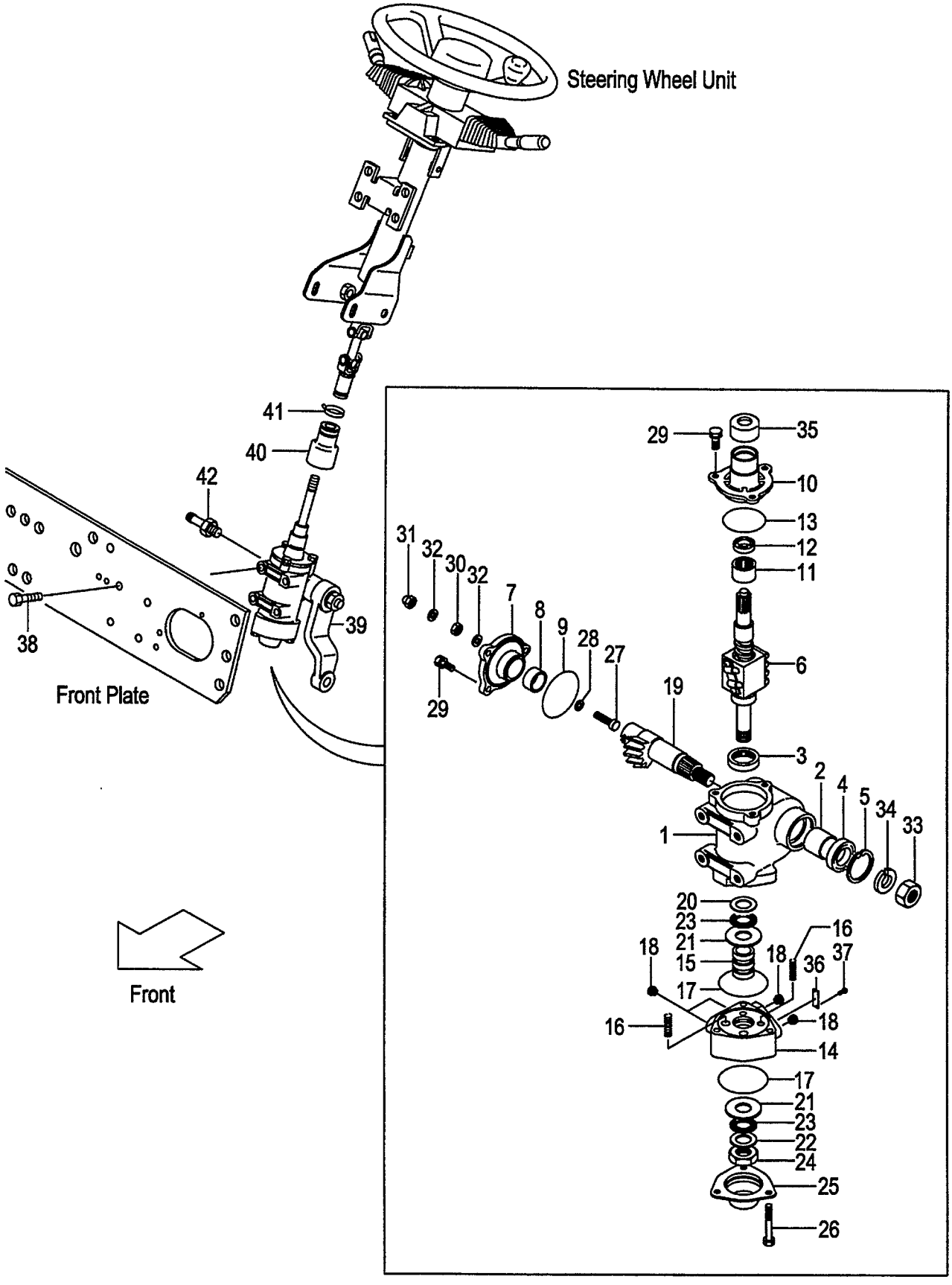

A:FD20C7 FD20T7 FD25C7 FD25T7

Item No	Part No.	Mark	Description		Req'd	Remarks : Serial No.
21	B-23641-01610		RACE,THRUST	レース	2	[EXC/PSS][EXE/PSS][EXK/PSS] [EXN/PSS]
22	B-23451-02212		RACE,THRUST	レース	1	[EXC/PSS][EXE/PSS][EXK/PSS] [EXN/PSS]
23	B-23451-02106		BRG,THRUST	ﾍﾞｱﾘﾝｸﾞ	2	[EXC/PSS][EXE/PSS][EXK/PSS] [EXN/PSS]
24	B-23641-02227		NUT	ﾅｯﾄ	1	[EXC/PSS][EXE/PSS][EXK/PSS] [EXN/PSS]
25	B-23641-02508		COVER,END	ｶﾊﾞｰ	1	[EXC/PSS][EXE/PSS][EXK/PSS] [EXN/PSS]
26	B-23641-03314		BOLT	ﾎﾞﾙﾄ	3	[EXC/PSS][EXE/PSS][EXK/PSS] [EXN/PSS]
27	14354-12211		SCREW,ADJUST	ｽｸﾘｭ	1	[EXC/PSS][EXE/PSS][EXK/PSS] [EXN/PSS]
28	14354-12221		SHIM,ADJUST-SCREW	ｼﾑ	1	[EXC/PSS][EXE/PSS][EXK/PSS] [EXN/PSS]
29	B-23711-03701		BOLT	ﾎﾞﾙﾄ	6	[EXC/PSS][EXE/PSS][EXK/PSS] [EXN/PSS]
30	01402-10010		NUT	ﾅｯﾄ	1	[EXC/PSS][EXE/PSS][EXK/PSS] [EXN/PSS]
31	14354-12261		NUT,CAP	ﾅｯﾄ	1	[EXC/PSS][EXE/PSS][EXK/PSS] [EXN/PSS]
32	14354-12251		PACKING	ﾊﾟｯｷﾝｸﾞ	2	[EXC/PSS][EXE/PSS][EXK/PSS] [EXN/PSS]
33	B-23641-02218		NUT	ﾅｯﾄ	1	[EXC/PSS][EXE/PSS][EXK/PSS] [EXN/PSS]
34	B-94101-20512		WASHER	ﾜｯｼｬ	1	[EXC/PSS][EXE/PSS][EXK/PSS] [EXN/PSS]
35	B-23641-04303		COVER,DUST	ｶﾊﾞｰ	1	[EXC/PSS][EXE/PSS][EXK/PSS] [EXN/PSS]
36	NO PART NO.	#	PLATE,NAME	ﾌﾟﾚｰﾄ	1	[EXC/PSS][EXE/PSS][EXK/PSS] [EXN/PSS]
37	NO PART NO.	#	SCREW,DRIVE	ｽｸﾘｭ	2	[EXC/PSS][EXE/PSS][EXK/PSS] [EXN/PSS]
38	01184-12030		BOLT	ﾎﾞﾙﾄ	4	[EXC/PSS][EXE/PSS][EXK/PSS] [EXN/PSS]
39	239A4-22001		ARM,PITMAN	ｱｰﾑ	1	[EXC/PSS][EXE/PSS][EXK/PSS] [EXN/PSS]
40	239A4-12211		BOOT,GEAR-BOX	ﾌﾞｰﾂ	1	[EXC/PSS][EXE/PSS][EXK/PSS] [EXN/PSS]
41	04913-11200		BAND	ﾊﾞﾝﾄﾞ	1	[EXC/PSS][EXE/PSS][EXK/PSS] [EXN/PSS]
42	25597-62211		NIPPLE	ﾆｯﾌﾟﾙ	1	[EXC/PSS][EXE/PSS][EXK/PSS] [EXN/PSS]

FIG.82 STEERING WHEEL UNIT (TOR-CON):[EXN]

(F6024150) ステアリング゛ホイールユニット

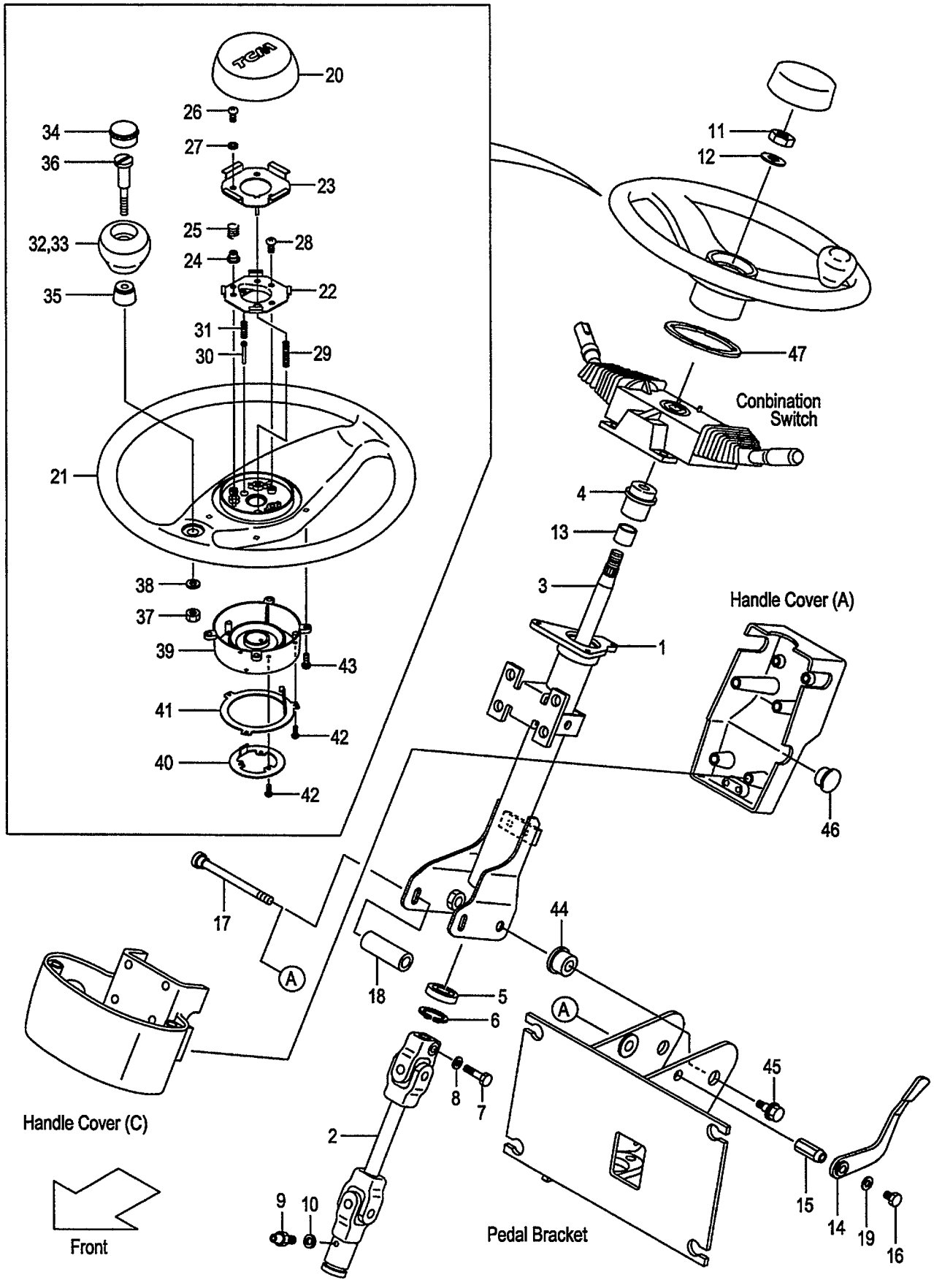

A:FD20T7 FD25T7

Item No	Part No.	Mark	Description		Req'd	Remarks : Serial No.
A1	539A2-60301		SHAFT-ASSY,STEERING	ｽﾃｱﾘﾝｸﾞｼｬﾌﾄｱｯｾﾝ	1	[EXN] INC.1-13
1	539A2-62301		COLUMN	ｺﾗﾑ	1	[EXN]
2	239A4-12121		JOINT,UNIVERSAL	ｼﾞｮｲﾝﾄ	1	[EXN]
3	539A2-62321		SHAFT	ｼｬﾌﾄ	1	[EXN]
4	NO PART NO.		BUSHING,COLUMN	ﾌﾞｯｼﾝｸﾞ	1	[EXN]
5	NO PART NO.		BRG,BALL	ﾍﾞｱﾘﾝｸﾞ	1	[EXN]
6	NO PART NO.		RING,SNAP	ｽﾅｯﾌﾟﾘﾝｸﾞ	1	[EXN]
7	NO PART NO.		BOLT	ﾎﾞﾙﾄ	1	[EXN]
8	NO PART NO.		WASHER	ﾜｯｼｬ	1	[EXN]
9	NO PART NO.		FITTING	ﾌｨｯﾃｨﾝｸﾞ	1	[EXN]
10	NO PART NO.		WASHER	ﾜｯｼｬ	1	[EXN]
11	01402-00014		NUT	ﾅｯﾄ	1	[EXN]
12	14354-12271		WASHER	ﾜｯｼｬ	1	[EXN]
13	NO PART NO.		BUSHING,DU	ﾌﾞｯｼﾝｸﾞ	1	[EXN]
A2	209K4-10601		LEVER-ASSY,TILT-LOCK	ﾃｨﾙﾄﾛｯｸﾚﾊﾞｰｱｯｾﾝ	1	[EXN] INC.14-19
14	216G4-12171		LEVER	ﾚﾊﾞｰ	1	[EXN]
15	209K4-12301		NUT,LOCK	ﾅｯﾄ	1	[EXN]
16	215E4-12231		BOLT	ﾎﾞﾙﾄ	1	[EXN]
17	216G4-12151		BOLT,LOCK	ﾎﾞﾙﾄ	1	[EXN]
18	216G4-12161		COLLAR	ｶﾗｰ	1	[EXN]
19	214A4-12161		WASHER	ﾜｯｼｬ	1	[EXN]
A3	209K4-10801		WHEEL-ASSY,STEERING	ｽﾃｱﾘﾝｸﾞﾎｲｰﾙｱｯｾﾝ	1	[EXN] INC.20-43
20	216G4-12761		PAD,HORN	ﾊﾟｯﾄﾞ	1	[EXN]
21	209K4-12561		WHEEL,STEERING	ﾎｲｰﾙ	1	[EXN]
A4	271F4-12221		SWITCH-ASSY	ｽｲｯﾁｱｯｾﾝ	1	[EXN] INC.22-27
22	NO PART NO.	#	PLATE,CONTACT,A	ﾌﾟﾚｰﾄ	1	[EXN]
23	NO PART NO.	#	PLATE,CONTACT,B	ﾌﾟﾚｰﾄ	1	[EXN]
24	216G4-12601		INSULATOR	ｲﾝｼｭﾚｰﾀ	3	[EXN]
25	216G4-12611		SPRING,HORN	ｽﾌﾟﾘﾝｸﾞ	3	[EXN]
26	216G4-12621		SCREW	ｽｸﾘｭ	3	[EXN]
27	216G4-12631		WASHER,FIVER	ﾜｯｼｬ	3	[EXN]
28	216G4-12641		SCREW	ｽｸﾘｭ	2	[EXN]
29	216G4-12661		SPRING,EARTH	ｽﾌﾟﾘﾝｸﾞ	1	[EXN]
30	271F4-12231		PLUNGER	ﾌﾟﾗﾝｼﾞｬ	1	[EXN]
31	271F4-12241		SPRING,PLUNGER	ｽﾌﾟﾘﾝｸﾞ	1	[EXN]
A5	216G4-12681		KNOB-ASSY	ﾉﾌﾞｱｯｾﾝ	1	[EXN] INC.32-38
32	NO PART NO.	#	KNOB	ﾉﾌﾞ	1	[EXN]
33	NO PART NO.	#	INSERT,KNOB	ｲﾝｻｰﾄ	1	[EXN]
34	216G4-12711		CAP	ｷｬｯﾌﾟ	1	[EXN]
35	NO PART NO.	#	BUSHING	ﾌﾞｯｼﾝｸﾞ	1	[EXN]
36	NO PART NO.	#	SHAFT	ｼｬﾌﾄ	1	[EXN]
37	216G4-12741		NUT	ﾅｯﾄ	1	[EXN]
38	216G4-12751		WASHER	ﾜｯｼｬ	1	[EXN]
39	209K4-12541		COVER,CANCEL-CAM	ｶﾊﾞｰ	1	[EXN]
40	209K4-12531		RING,CONTACT,A	ﾘﾝｸﾞ	1	[EXN]
41	209K4-12521		RING,CONTACT,B	ﾘﾝｸﾞ	1	[EXN]
42	209K4-12511		SCREW	ｽｸﾘｭ	6	[EXN]
43	209K4-12501		SCREW	ｽｸﾘｭ	4	[EXN]
44	216G4-12101		BUSHING	ﾌﾞｯｼﾝｸﾞ	2	[EXN]
45	216G4-12111		BOLT	ﾎﾞﾙﾄ	2	[EXN]

FIG.82 STEERING WHEEL UNIT (TOR-CON):[EXN]

(F6024150) ステアリング゛ホイールユニット

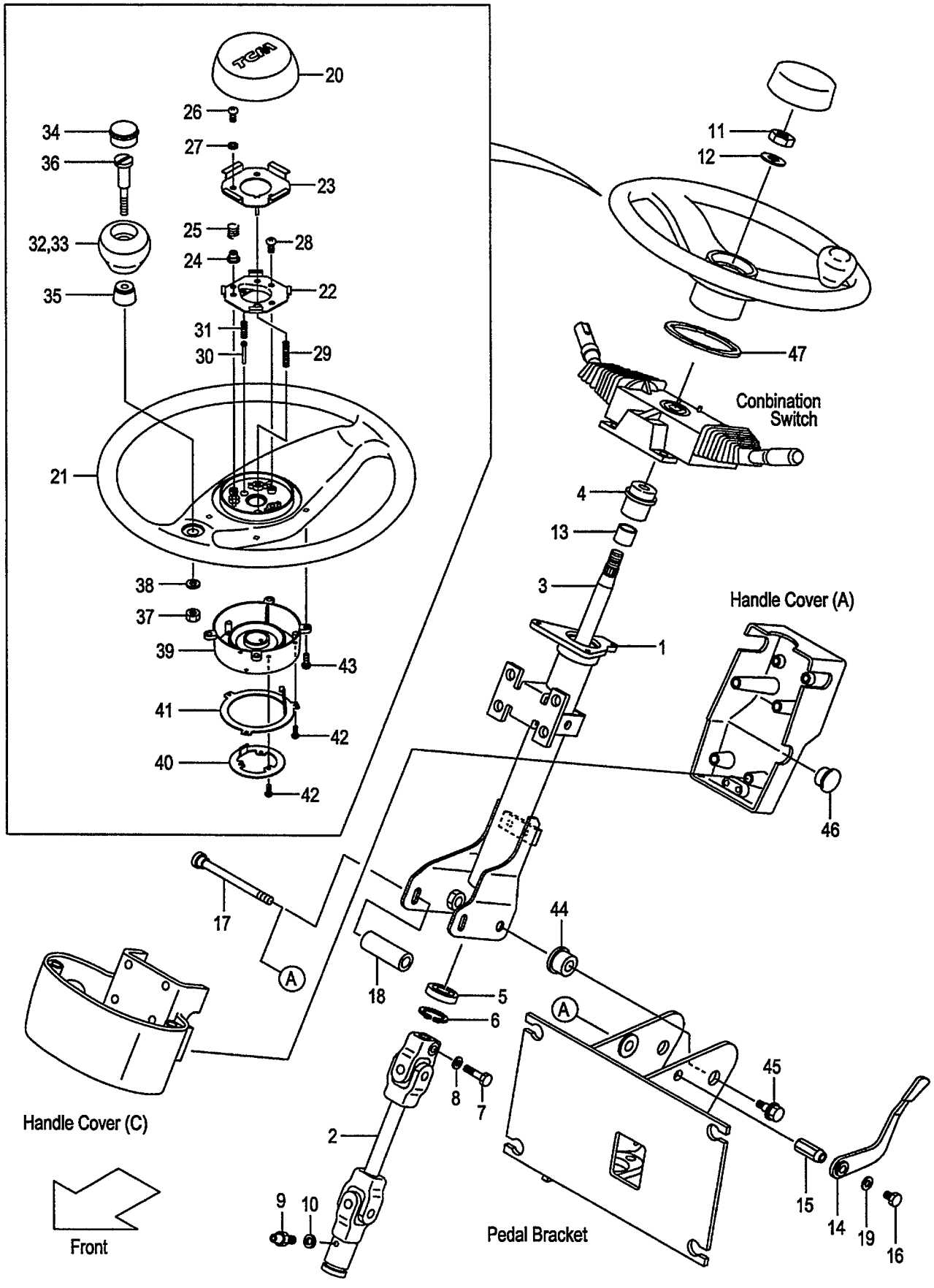

FIG.82
(F6024150)

A:FD20T7 FD25T7

Item No	Part No.	Mark	Description	Req'd	Remarks : Serial No.
46	514A5-12701		PLUG,HOLE ﾌﾟﾗｸﾞ	1	[EXN]
47	209P4-12111		RUBBER,HANDLE-WHEEL ﾗﾊﾞｰ	1	[EXN]

FIG.83 DRAG LINK
(F6024210) ﾄﾞﾗｯｸﾞﾘﾝｸ

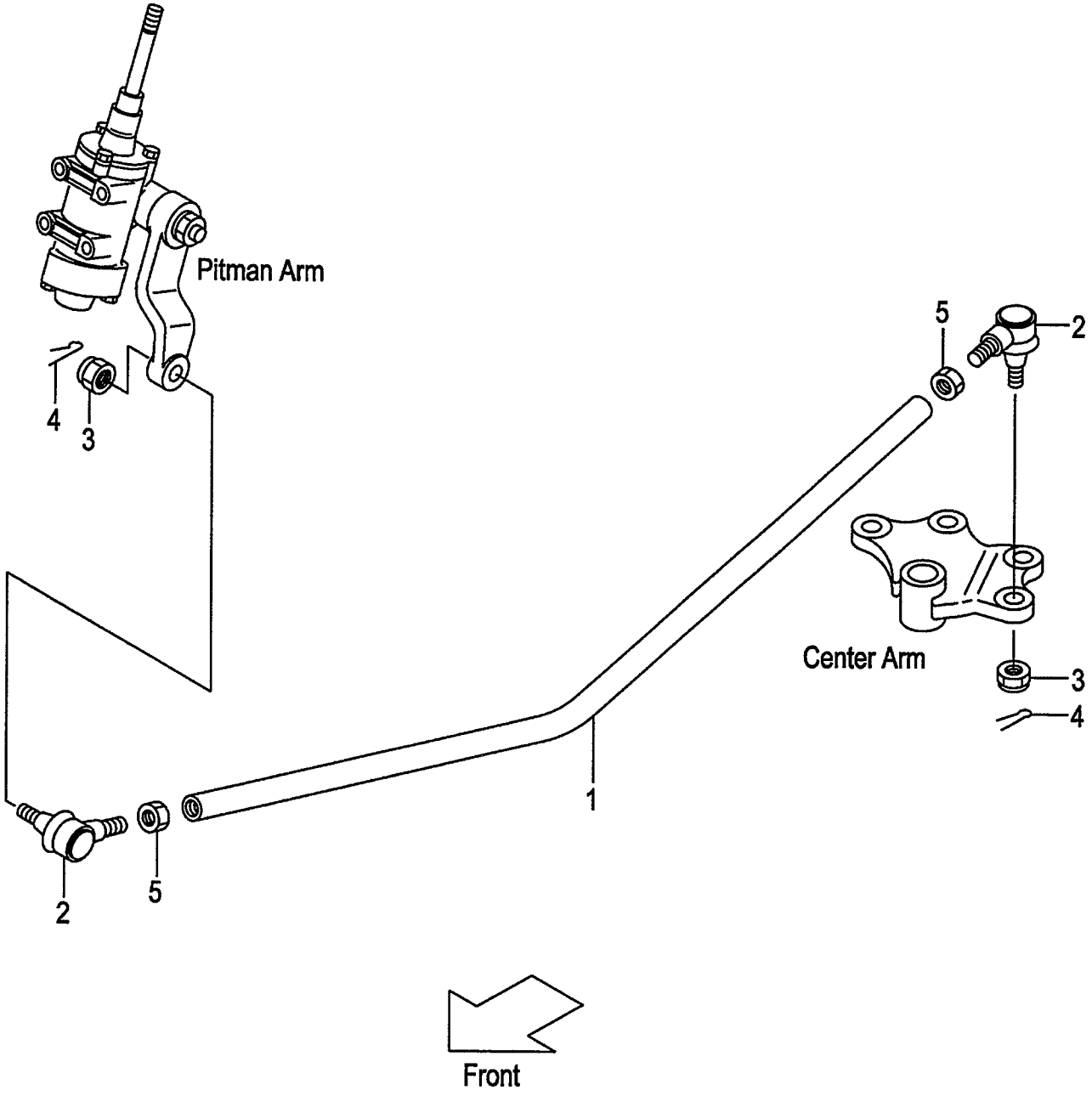

A:FD20C18 FD20T18 FD25C18 FD25T18
B:FD20C7 FD20T7 FD25C7 FD25T7
C:FD20W7 FD25W7

FIG.83
(F6024210)

Item No	Part No.	Mark	Description		Req'd	Remarks : Serial No.
1	234A4-22101		LINK,DRAG	ﾘﾝｸ	1	(WITHOUT EXC,EXE,EXK,EXN, OBT,EXB/OBT)
-	234A4-22101		LINK,DRAG	ﾘﾝｸ	1	B [EXC/PSS][EXE/PSS][EXK/PSS] [EXN/PSS]
A1	24234-30551		END-ASSY,ROD,RH	ｴﾝﾄﾞｱｯｾﾝ	2	(WITHOUT EXC,EXE,EXK,EXN, OBT,EXB/OBT) INC.2-4
-	24234-30551		END-ASSY,ROD,RH	ｴﾝﾄﾞｱｯｾﾝ	2	B [EXC/PSS][EXE/PSS][EXK/PSS] [EXN/PSS] INC.2-4
2	NO PART NO.	#	END,ROD,RH	ｴﾝﾄﾞ	2	(WITHOUT EXC,EXE,EXK,EXN, OBT,EXB/OBT)
-	NO PART NO.	#	END,ROD,RH	ｴﾝﾄﾞ	2	B [EXC/PSS][EXE/PSS][EXK/PSS] [EXN/PSS]
3	01412-10016		NUT	ﾅｯﾄ	2	(WITHOUT EXC,EXE,EXK,EXN, OBT,EXB/OBT)
-	01412-10016		NUT	ﾅｯﾄ	2	B [EXC/PSS][EXE/PSS][EXK/PSS] [EXN/PSS]
4	02200-32032		PIN,COTTER	ﾋﾟﾝ	2	(WITHOUT EXC,EXE,EXK,EXN, OBT,EXB/OBT)
-	02200-32032		PIN,COTTER	ﾋﾟﾝ	2	B [EXC/PSS][EXE/PSS][EXK/PSS] [EXN/PSS]
5	01402-00022		NUT	ﾅｯﾄ	2	(WITHOUT EXC,EXE,EXK,EXN, OBT,EXB/OBT)
-	01402-00022		NUT	ﾅｯﾄ	2	B [EXC/PSS][EXE/PSS][EXK/PSS] [EXN/PSS]

FIG.84 STEERING AXLE

(F6024310) ステアリング アクスル

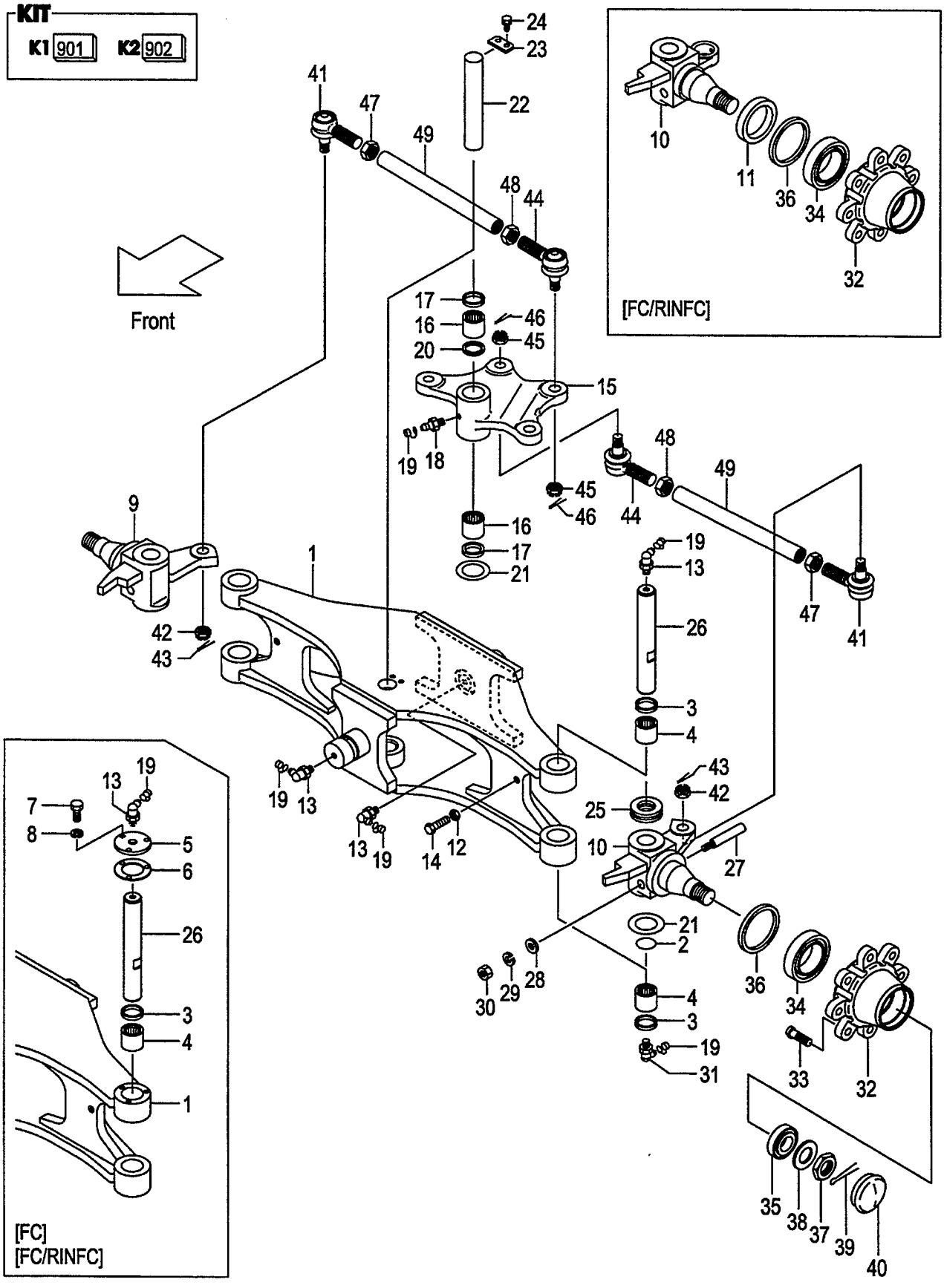

A:FD20C18 FD20T18 FD25C18 FD25T18
B:FD20C7 FD20T7 FD25C7 FD25T7 FD20W7 FD25W7

FIG.84
(F6024310)

Item No	Part No.	Mark	Description		Req'd	Remarks : Serial No.
A1	234A4-30001		AXLE-ASSY,STEERING	ｽﾃｱﾘﾝｸﾞｱｸｽﾙｱｯｾﾝ	1	INC.1-4,9,10,12-49
-	534A3-70021		AXLE-ASSY,STEERING	ｽﾃｱﾘﾝｸﾞｱｸｽﾙｱｯｾﾝ	1	[FC] INC.1-10,12-49
-	534A3-70031		AXLE-ASSY,STEERING	ｽﾃｱﾘﾝｸﾞｱｸｽﾙｱｯｾﾝ	1	[FC/RINFC] INC.1-49
901	215E4-39801	K1	KIT,REPAIR	ﾘﾍﾟｱｷｯﾄ	1	INC.2-4,13,21,25,27-30
902	24454-39812	K2	KIT,REPAIR	ﾘﾍﾟｱｷｯﾄ	1	INC.16-18,20,21,23,24
1	234A4-30111		AXLE,STEERING	ｱｸｽﾙ	1	
-	534A3-70101		AXLE,STEERING	ｱｸｽﾙ	1	[FC][FC/RINFC]
2	23654-32161	*	O-RING	Oﾘﾝｸﾞ	2	
3	214A4-32161	*	SEAL,DUST	ｼｰﾙ	4	
4	03146-13201	*	BRG,NEEDLE	ﾍﾞｱﾘﾝｸﾞ	4	
5	514A3-72052		PLATE,CAP	ﾌﾟﾚｰﾄ	2	[FC][FC/RINFC]
6	514A3-72062		PACKING	ﾊﾟｯｷﾝｸﾞ	2	[FC][FC/RINFC]
7	01141-06012		BOLT	ﾎﾞﾙﾄ	6	[FC][FC/RINFC]
8	02010-10006		WASHER	ﾜｯｼｬ	6	[FC][FC/RINFC]
9	234A4-32261		KNUCKLE,RH	ﾅｯｸﾙ	1	
-	534A3-72111		KNUCKLE,RH	ﾅｯｸﾙ	1	[FC/RINFC]
10	234A4-32271		KNUCKLE,LH	ﾅｯｸﾙ	1	
-	534A3-72121		KNUCKLE,LH	ﾅｯｸﾙ	1	[FC/RINFC]
11	514A3-72211		SEAT,OIL-SEAL	ｼｰﾄ	2	[FC/RINFC]
12	01402-00012		NUT	ﾅｯﾄ	2	
13	04901-00190	*	FITTING	ﾌｨｯﾃｨﾝｸﾞ	4	
14	01100-12030		BOLT	ﾎﾞﾙﾄ	2	
15	24454-30512		ARM,CENTER	ｱｰﾑ	1	
16	03146-13201	*	BRG,NEEDLE	ﾍﾞｱﾘﾝｸﾞ	2	
17	23654-32081	*	SEAL,DUST	ｼｰﾙ	2	
18	04901-00100	*	FITTING	ﾌｨｯﾃｨﾝｸﾞ	1	
19	22199-12401		CAP,NIPPLE	ｷｬｯﾌﾟ	7	
20	24454-32391	*	SPACER	ｽﾍﾟｰｻ	1	
21	22214-30321	*	SHIM	ｼﾑ	7	
22	24454-32161		PIN,CENTER-ARM	ﾋﾟﾝ	1	
23	20224-30061	*	PLATE,SET	ﾌﾟﾚｰﾄ	1	
24	01183-08016	*	BOLT	ﾎﾞﾙﾄ	2	
25	03126-83201	*	BRG,THRUST	ﾍﾞｱﾘﾝｸﾞ	2	
26	24454-32232		KINGPIN	ｷﾝｸﾞﾋﾟﾝ	2	
-	514A3-72201		KINGPIN	ｷﾝｸﾞﾋﾟﾝ	2	[FC][FC/RINFC]
27	215E4-32341	*	PIN,LOCK	ﾋﾟﾝ	2	
28	02000-00010	*	WASHER	ﾜｯｼｬ	2	
29	02010-00010	*	WASHER	ﾜｯｼｬ	2	
30	01400-00010	*	NUT	ﾅｯﾄ	2	
31	04901-00191		FITTING	ﾌｨｯﾃｨﾝｸﾞ	2	
32	214A4-32041		HUB,REAR	ﾊﾌﾞ	2	
33	23654-32041		BOLT,HUB	ﾎﾞﾙﾄ	16	
34	03071-30211		BRG,TAPER-ROLLER	ﾍﾞｱﾘﾝｸﾞ	2	
35	03071-30207		BRG,TAPER-ROLLER	ﾍﾞｱﾘﾝｸﾞ	2	
36	03217-08501		SEAL,OIL	ｼｰﾙ	2	
37	01412-00030		NUT,CASTLE	ﾅｯﾄ	2	
38	02000-00030		WASHER	ﾜｯｼｬ	2	
39	02200-06055		PIN,COTTER	ﾋﾟﾝ	2	
40	214A4-32051		CAP	ｷｬｯﾌﾟ	2	
A2	24234-30551		END-ASSY,ROD,RH	ｴﾝﾄﾞｱｯｾﾝ	2	INC.41-43

FIG.84 STEERING AXLE

(F6024310) ステアリング アクスル

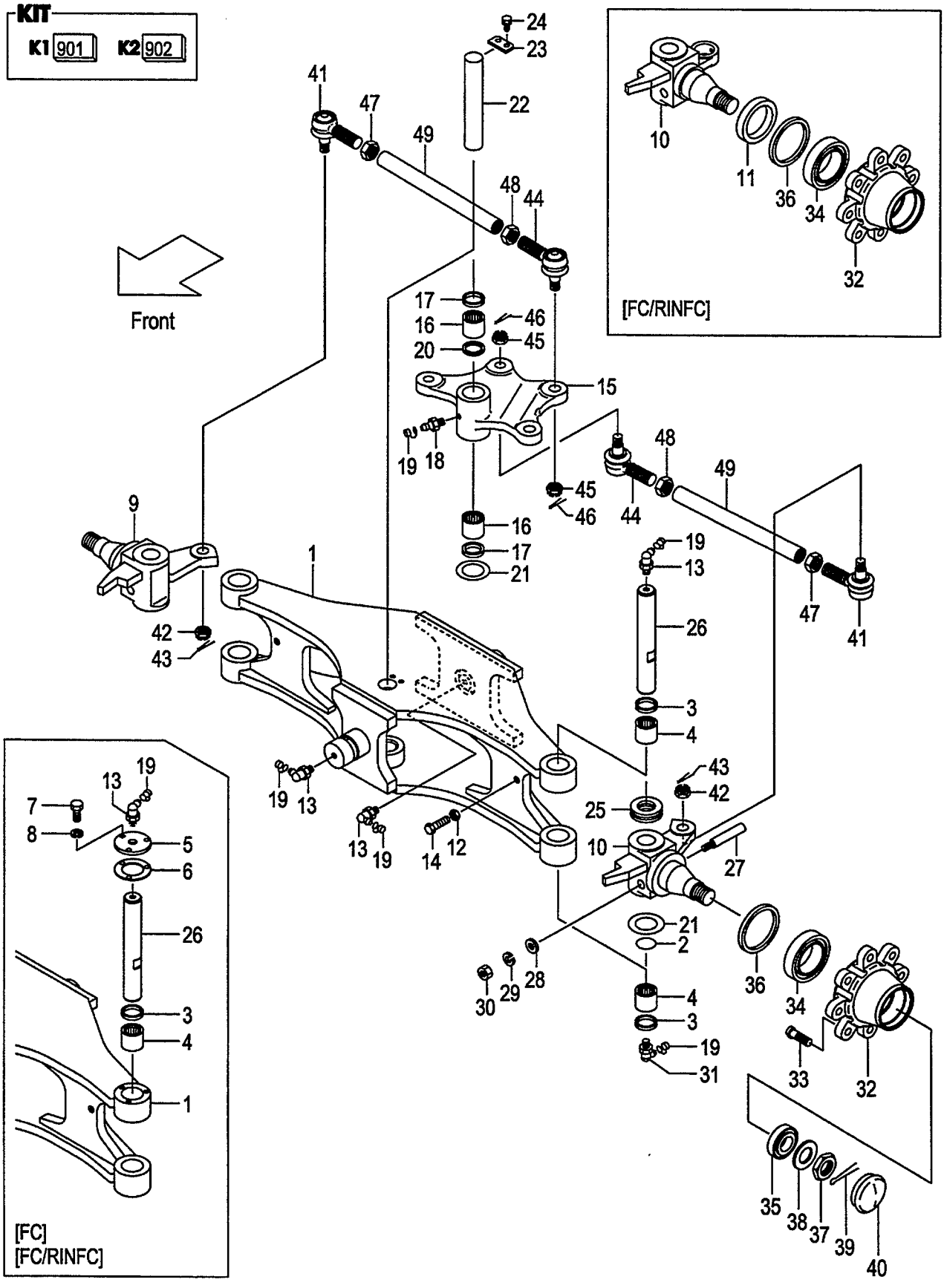

A:FD20C18 FD20T18 FD25C18 FD25T18
B:FD20C7 FD20T7 FD25C7 FD25T7 FD20W7 FD25W7

FIG.84
(F6024310)

Item No	Part No.	Mark	Description		Req'd	Remarks : Serial No.
41	NO PART NO.	#	END,ROD,RH	ｴﾝﾄﾞ	2	
42	01412-10016		NUT,CASTLE	ﾅｯﾄ	2	
43	02200-32032		PIN,COTTER	ﾋﾟﾝ	2	
A3	24234-30561		END-ASSY,ROD,LH	ｴﾝﾄﾞｱｯｾﾝ	2	INC.44-46
44	NO PART NO.	#	END,ROD,LH	ｴﾝﾄﾞ	2	
45	01412-10016		NUT,CASTLE	ﾅｯﾄ	2	
46	02200-32032		PIN,COTTER	ﾋﾟﾝ	2	
47	24234-32411		NUT,RH	ﾅｯﾄ	2	
48	24234-32421		NUT,LH	ﾅｯﾄ	2	
49	214A4-32131		ROD,TIE	ﾛｯﾄﾞ	2	

FIG.85 STEERING AXLE [EXC][EXE][EXK][EXN][OBT]

(F6024320) ステアリング゛アクスル

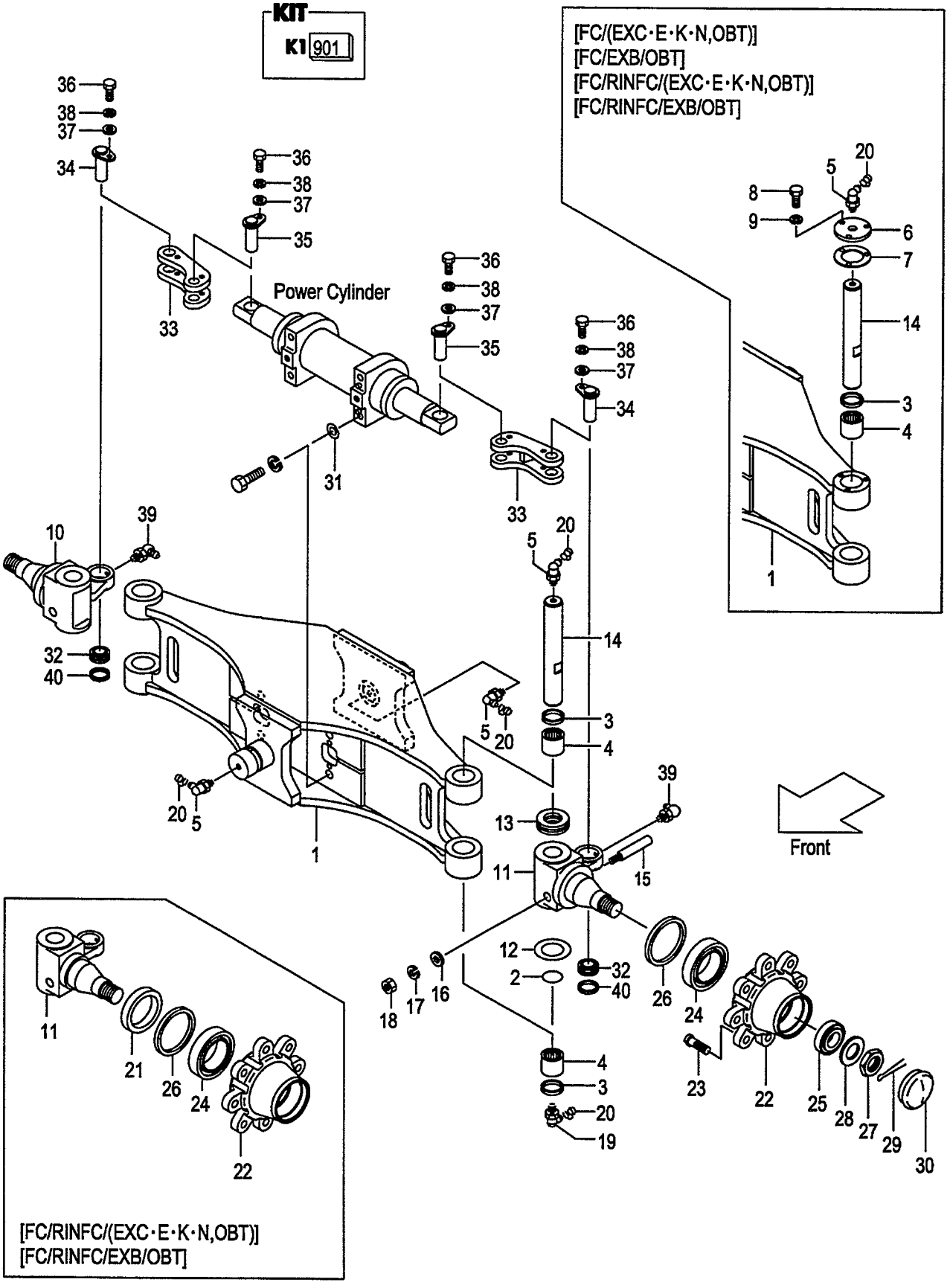

A:FD20C7 FD20T7 FD25C7 FD25T7

Item No	Part No.	Mark	Description		Req'd	Remarks : Serial No.
A1	533A2-40402		AXLE-ASSY,STEERING	ｽﾃｱﾘﾝｸﾞｱｸｽﾙｱｯｾﾝ	1	[EXC&E&K&N][OBT][EXB/OBT] INC.1-5,10-20,22-32
-	533A2-40502		AXLE-ASSY,STEERING	ｽﾃｱﾘﾝｸﾞｱｸｽﾙｱｯｾﾝ	1	[FC/EXC&E&K&N][FC/OBT] [FC/EXB/OBT] INC.1-20,22-32
-	533A2-40552		AXLE-ASSY,STEERING	ｽﾃｱﾘﾝｸﾞｱｸｽﾙｱｯｾﾝ	1	[FC/RINFC/EXC&E&K&N] INC.1-32
-	533A2-40552		AXLE-ASSY,STEERING	ｽﾃｱﾘﾝｸﾞｱｸｽﾙｱｯｾﾝ	1	[FC/RINFC/OBT] [FC/RINFC/EXB/OBT] INC.1-32
901	215E4-39801	K1	KIT,REPAIR	ﾘﾍﾟｱｷｯﾄ	1	[EXC&E&K&N][OBT][EXB/OBT] INC.2-5,12,13,15-19
1	514A2-40104		AXLE,STEERING	ｱｸｽﾙ	1	[EXC&E&K&N][OBT][EXB/OBT]
-	514A2-44022		AXLE,STEERING	ｱｸｽﾙ	1	[FC/EXC&E&K&N][FC/OBT] [FC/EXB/OBT]
-	514A2-44022		AXLE,STEERING	ｱｸｽﾙ	1	[FC/RINFC/EXC&E&K&N]
-	514A2-44022		AXLE,STEERING	ｱｸｽﾙ	1	[FC/RINFC/OBT] [FC/RINFC/EXB/OBT]
2	23654-32161	*	O-RING	Oﾘﾝｸﾞ	2	[EXC&E&K&N][OBT][EXB/OBT]
3	214A4-32161	*	SEAL,DUST	ｼｰﾙ	4	[EXC&E&K&N][OBT][EXB/OBT]
4	03146-13201	*	BRG,NEEDLE	ﾍﾞｱﾘﾝｸﾞ	4	[EXC&E&K&N][OBT][EXB/OBT]
5	04901-00190	*	FITTING	ﾌｨｯﾃｨﾝｸﾞ	4	[EXC&E&K&N][OBT][EXB/OBT]
6	514A3-72052		PLATE,CAP	ﾌﾟﾚｰﾄ	2	[FC/EXC&E&K&N][FC/OBT] [FC/EXB/OBT]
-	514A3-72052		PLATE,CAP	ﾌﾟﾚｰﾄ	2	[FC/RINFC/EXC&E&K&N]
-	514A3-72052		PLATE,CAP	ﾌﾟﾚｰﾄ	2	[FC/RINFC/OBT] [FC/RINFC/EXB/OBT]
7	514A3-72062		PACKING	ﾊﾟｯｷﾝｸﾞ	2	[FC/EXC&E&K&N][FC/OBT] [FC/EXB/OBT]
-	514A3-72062		PACKING	ﾊﾟｯｷﾝｸﾞ	2	[FC/RINFC/EXC&E&K&N]
-	514A3-72062		PACKING	ﾊﾟｯｷﾝｸﾞ	2	[FC/RINFC/OBT] [FC/RINFC/EXB/OBT]
8	01141-06012		BOLT	ﾎﾞﾙﾄ	6	[FC/EXC&E&K&N][FC/OBT] [FC/EXB/OBT]
-	01141-06012		BOLT	ﾎﾞﾙﾄ	6	[FC/RINFC/EXC&E&K&N]
-	01141-06012		BOLT	ﾎﾞﾙﾄ	6	[FC/RINFC/OBT] [FC/RINFC/EXB/OBT]
9	02010-10006		WASHER	ﾜｯｼｬ	6	[FC/EXC&E&K&N][FC/OBT] [FC/EXB/OBT]
-	02010-10006		WASHER	ﾜｯｼｬ	6	[FC/RINFC/EXC&E&K&N]
-	02010-10006		WASHER	ﾜｯｼｬ	6	[FC/RINFC/OBT] [FC/RINFC/EXB/OBT]
10	533A2-42032		KNUCKLE,RH	ﾅｯｸﾙ	1	[EXC&E&K&N][OBT][EXB/OBT]
-	533A2-42202		KNUCKLE,RH	ﾅｯｸﾙ	1	[FC/RINFC/EXC&E&K&N]
-	533A2-42202		KNUCKLE,RH	ﾅｯｸﾙ	1	[FC/RINFC/OBT] [FC/RINFC/EXB/OBT]
11	533A2-42042		KNUCKLE,LH	ﾅｯｸﾙ	1	[EXC&E&K&N][OBT][EXB/OBT]
-	533A2-42212		KNUCKLE,LH	ﾅｯｸﾙ	1	[FC/RINFC/EXC&E&K&N]
-	533A2-42212		KNUCKLE,LH	ﾅｯｸﾙ	1	[FC/RINFC/OBT] [FC/RINFC/EXB/OBT]
12	22214-30321	*	SHIM	ｼﾑ	6	[EXC&E&K&N][OBT][EXB/OBT]
13	03126-83201	*	BRG,THRUST	ﾍﾞｱﾘﾝｸﾞ	2	[EXC&E&K&N][OBT][EXB/OBT]
14	24454-32232		KINGPIN	ｷﾝｸﾞﾋﾟﾝ	2	[EXC&E&K&N][OBT][EXB/OBT]

FIG.85 STEERING AXLE [EXC][EXE][EXK][EXN][OBT]

(F6024320) ステアリング゛アクスル

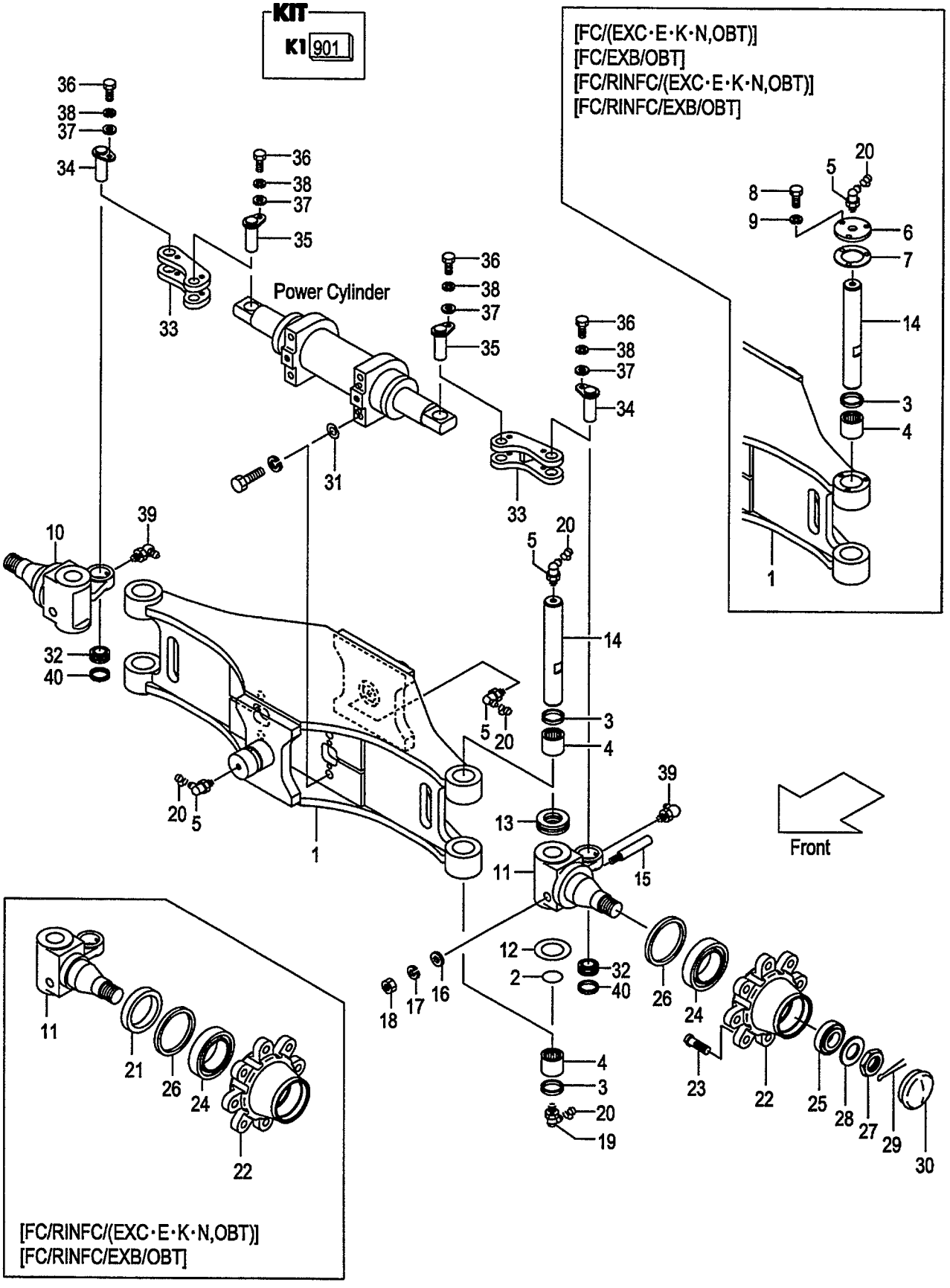

FIG.85
(F6024320)

A:FD20C7 FD20T7 FD25C7 FD25T7

Item No	Part No.	Mark	Description		Req'd	Remarks : Serial No.
-	514A2-44071		KINGPIN	ｷﾝｸﾞﾋﾟﾝ	2	[FC/EXC&E&K&N][FC/OBT]
						[FC/EXB/OBT]
-	514A2-44071		KINGPIN	ｷﾝｸﾞﾋﾟﾝ	2	[FC/RINFC/EXC&E&K&N]
-	514A2-44071		KINGPIN	ｷﾝｸﾞﾋﾟﾝ	2	[FC/RINFC/OBT]
						[FC/RINFC/EXB/OBT]
15	215E4-32341	*	PIN,LOCK	ﾋﾟﾝ	2	[EXC&E&K&N][OBT][EXB/OBT]
16	02000-00010	*	WASHER	ﾜｯｼｬ	2	[EXC&E&K&N][OBT][EXB/OBT]
17	02010-00010	*	WASHER	ﾜｯｼｬ	2	[EXC&E&K&N][OBT][EXB/OBT]
18	01400-00010	*	NUT	ﾅｯﾄ	2	[EXC&E&K&N][OBT][EXB/OBT]
19	04901-00191	*	FITTING	ﾌｨｯﾃｨﾝｸﾞ	2	[EXC&E&K&N][OBT][EXB/OBT]
20	22199-12401		CAP,NIPPLE	ｷｬｯﾌﾟ	6	[EXC&E&K&N][OBT][EXB/OBT]
21	514A3-72211		SEAT,OIL-SEAL	ｼｰﾄ	2	[FC/RINFC/EXC&E&K&N]
-	514A3-72211		SEAT,OIL-SEAL	ｼｰﾄ	2	[FC/RINFC/OBT]
						[FC/RINFC/EXB/OBT]
22	214A4-32041		HUB,REAR	ﾊﾌﾞ	2	[EXC&E&K&N][OBT][EXB/OBT]
23	23654-32041		BOLT,HUB	ﾎﾞﾙﾄ	16	[EXC&E&K&N][OBT][EXB/OBT]
24	03071-30211		BRG,TAPER-ROLLER	ﾍﾞｱﾘﾝｸﾞ	2	[EXC&E&K&N][OBT][EXB/OBT]
25	03071-30207		BRG,TAPER-ROLLER	ﾍﾞｱﾘﾝｸﾞ	2	[EXC&E&K&N][OBT][EXB/OBT]
26	03217-08501		SEAL,OIL	ｼｰﾙ	2	[EXC&E&K&N][OBT][EXB/OBT]
27	01412-00030		NUT,CASTLE	ﾅｯﾄ	2	[EXC&E&K&N][OBT][EXB/OBT]
28	02000-00030		WASHER	ﾜｯｼｬ	2	[EXC&E&K&N][OBT][EXB/OBT]
29	02200-06055		PIN,COTTER	ﾋﾟﾝ	2	[EXC&E&K&N][OBT][EXB/OBT]
30	214A4-32051		CAP	ｷｬｯﾌﾟ	2	[EXC&E&K&N][OBT][EXB/OBT]
31	514A2-42481		SHIM,T-0.2	ｼﾑ	1	[EXC&E&K&N][OBT][EXB/OBT]
32	215E4-52231		JOINT,SPHERE-FACE	ｼﾞｮｲﾝﾄ	2	[EXC&E&K&N][OBT][EXB/OBT]
33	533A2-42071		YOKE	ﾖｰｸ	2	[EXC&E&K&N][OBT][EXB/OBT]
34	514A2-42721		PIN	ﾋﾟﾝ	2	[EXC&E&K&N][OBT][EXB/OBT]
35	533A2-42101		PIN	ﾋﾟﾝ	2	[EXC&E&K&N][OBT][EXB/OBT]
36	01103-08016		BOLT	ﾎﾞﾙﾄ	4	[EXC&E&K&N][OBT][EXB/OBT]
37	02000-00008		WASHER	ﾜｯｼｬ	4	[EXC&E&K&N][OBT][EXB/OBT]
38	02011-00008		WASHER	ﾜｯｼｬ	4	[EXC&E&K&N][OBT][EXB/OBT]
39	272A8-52101		NIPPLE,GREASE	ﾆｯﾌﾟﾙ	2	[EXC&E&K&N][OBT][EXB/OBT]
40	215E4-52301		COLLAR	ｶﾗｰ	2	[EXC&E&K&N][OBT][EXB/OBT]

FIG.86 STEERING AXLE [(EXC,EXE,EXK,EXN)/PSS]

(F6024330) ステアリング アクスル

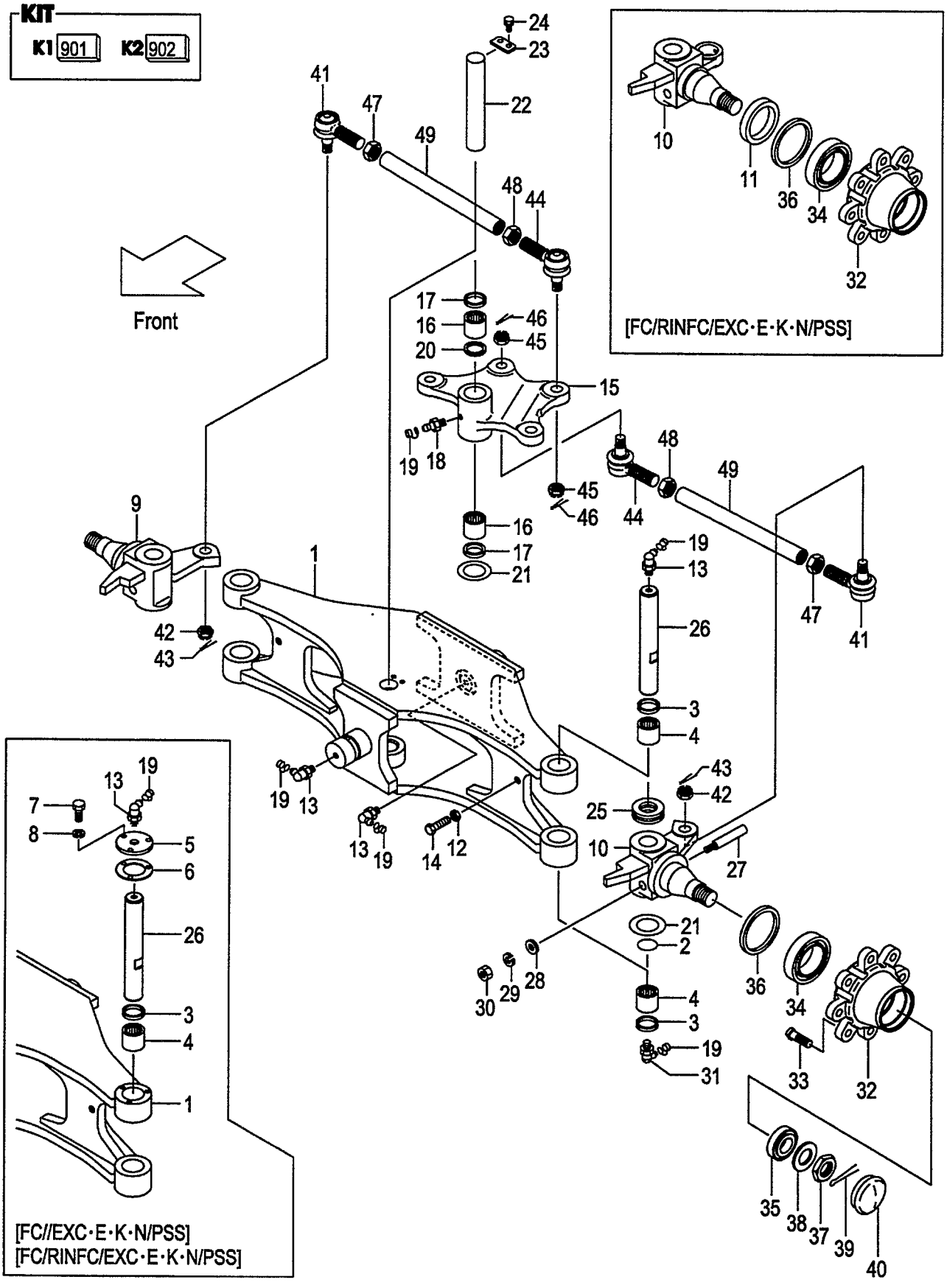

A:FD20C7 FD20T7 FD25C7 FD25T7

Item No	Part No.	Mark	Description		Req'd	Remarks : Serial No.
A1	234A4-30001		AXLE-ASSY,STEERING	ｽﾃｱﾘﾝｸﾞｱｸｽﾙｱｯｾﾝ	1	[EXC&E&K&N/PSS]
						INC.1-4,9,10,12-49
-	534A3-70021		AXLE-ASSY,STEERING	ｽﾃｱﾘﾝｸﾞｱｸｽﾙｱｯｾﾝ	1	[FC/EXC&E&K&N/PSS]
						INC.1-10,12-49
-	534A3-70031		AXLE-ASSY,STEERING	ｽﾃｱﾘﾝｸﾞｱｸｽﾙｱｯｾﾝ	1	[FC/RINFC/EXC&E&K&N/PSS]
						INC.1-49
901	215E4-39801	K1	KIT,REPAIR	ﾘﾍﾟｱｷｯﾄ	1	[EXC&E&K&N/PSS]
						INC.2-4,13,21,25,27-30
902	24454-39812	K2	KIT,REPAIR	ﾘﾍﾟｱｷｯﾄ	1	[EXC&E&K&N/PSS]
						INC.16-18,20,21,23,24
1	234A4-30111		AXLE,STEERING	ｱｸｽﾙ	1	[EXC&E&K&N/PSS]
-	534A3-70101		AXLE,STEERING	ｱｸｽﾙ	1	[FC/EXC&E&K&N/PSS]
						[FC/RINFC/EXC&E&K&N/PSS]
2	23654-32161	*	O-RING	Oﾘﾝｸﾞ	2	[EXC&E&K&N/PSS]
3	214A4-32161	*	SEAL,DUST	ｼｰﾙ	4	[EXC&E&K&N/PSS]
4	03146-13201	*	BRG,NEEDLE	ﾍﾞｱﾘﾝｸﾞ	4	[EXC&E&K&N/PSS]
5	514A3-72052		PLATE,CAP	ﾌﾟﾚｰﾄ	2	[FC/EXC&E&K&N/PSS]
						[FC/RINFC/EXC&E&K&N/PSS]
6	514A3-72062		PACKING	ﾊﾟｯｷﾝｸﾞ	2	[FC/EXC&E&K&N/PSS]
						[FC/RINFC/EXC&E&K&N/PSS]
7	01141-06012		BOLT	ﾎﾞﾙﾄ	6	[FC/EXC&E&K&N/PSS]
						[FC/RINFC/EXC&E&K&N/PSS]
8	02010-10006		WASHER	ﾜｯｼｬ	6	[FC/EXC&E&K&N/PSS]
						[FC/RINFC/EXC&E&K&N/PSS]
9	234A4-32261		KNUCKLE,RH	ﾅｯｸﾙ	1	[EXC&E&K&N/PSS]
-	534A3-72111		KNUCKLE,RH	ﾅｯｸﾙ	1	[FC/RINFC/EXC&E&K&N/PSS]
10	234A4-32271		KNUCKLE,LH	ﾅｯｸﾙ	1	[EXC&E&K&N/PSS]
-	534A3-72121		KNUCKLE,LH	ﾅｯｸﾙ	1	[FC/RINFC/EXC&E&K&N/PSS]
11	514A3-72211		SEAT,OIL-SEAL	ｼｰﾄ	2	[FC/RINFC/EXC&E&K&N/PSS]
12	01402-00012		NUT	ﾅｯﾄ	2	[EXC&E&K&N/PSS]
13	04901-00190	*	FITTING	ﾌｨｯﾃｨﾝｸﾞ	4	[EXC&E&K&N/PSS]
14	01100-12030		BOLT	ﾎﾞﾙﾄ	2	[EXC&E&K&N/PSS]
15	24454-30512		ARM,CENTER	ｱｰﾑ	1	[EXC&E&K&N/PSS]
16	03146-13201	*	BRG,NEEDLE	ﾍﾞｱﾘﾝｸﾞ	2	[EXC&E&K&N/PSS]
17	23654-32081	*	SEAL,DUST	ｼｰﾙ	2	[EXC&E&K&N/PSS]
18	04901-00100	*	FITTING	ﾌｨｯﾃｨﾝｸﾞ	1	[EXC&E&K&N/PSS]
19	22199-12401		CAP,NIPPLE	ｷｬｯﾌﾟ	7	[EXC&E&K&N/PSS]
20	24454-32391	*	SPACER	ｽﾍﾟｰｻ	1	[EXC&E&K&N/PSS]
21	22214-30321	*	SHIM	ｼﾑ	7	[EXC&E&K&N/PSS]
22	24454-32161		PIN,CENTER-ARM	ﾋﾟﾝ	1	[EXC&E&K&N/PSS]
23	20224-30061	*	PLATE,SET	ﾌﾟﾚｰﾄ	1	[EXC&E&K&N/PSS]
24	01183-08016	*	BOLT	ﾎﾞﾙﾄ	2	[EXC&E&K&N/PSS]
25	03126-83201	*	BRG,THRUST	ﾍﾞｱﾘﾝｸﾞ	2	[EXC&E&K&N/PSS]
26	24454-32232		KINGPIN	ｷﾝｸﾞﾋﾟﾝ	2	[EXC&E&K&N/PSS]
-	514A3-72201		KINGPIN	ｷﾝｸﾞﾋﾟﾝ	2	[FC/EXC&E&K&N/PSS]
						[FC/RINFC/EXC&E&K&N/PSS]
27	215E4-32341	*	PIN,LOCK	ﾋﾟﾝ	2	[EXC&E&K&N/PSS]
28	02000-00010	*	WASHER	ﾜｯｼｬ	2	[EXC&E&K&N/PSS]
29	02010-00010	*	WASHER	ﾜｯｼｬ	2	[EXC&E&K&N/PSS]
30	01400-00010	*	NUT	ﾅｯﾄ	2	[EXC&E&K&N/PSS]

FIG.86 STEERING AXLE [(EXC,EXE,EXK,EXN)/PSS]

(F6024330) ステアリング アクスル

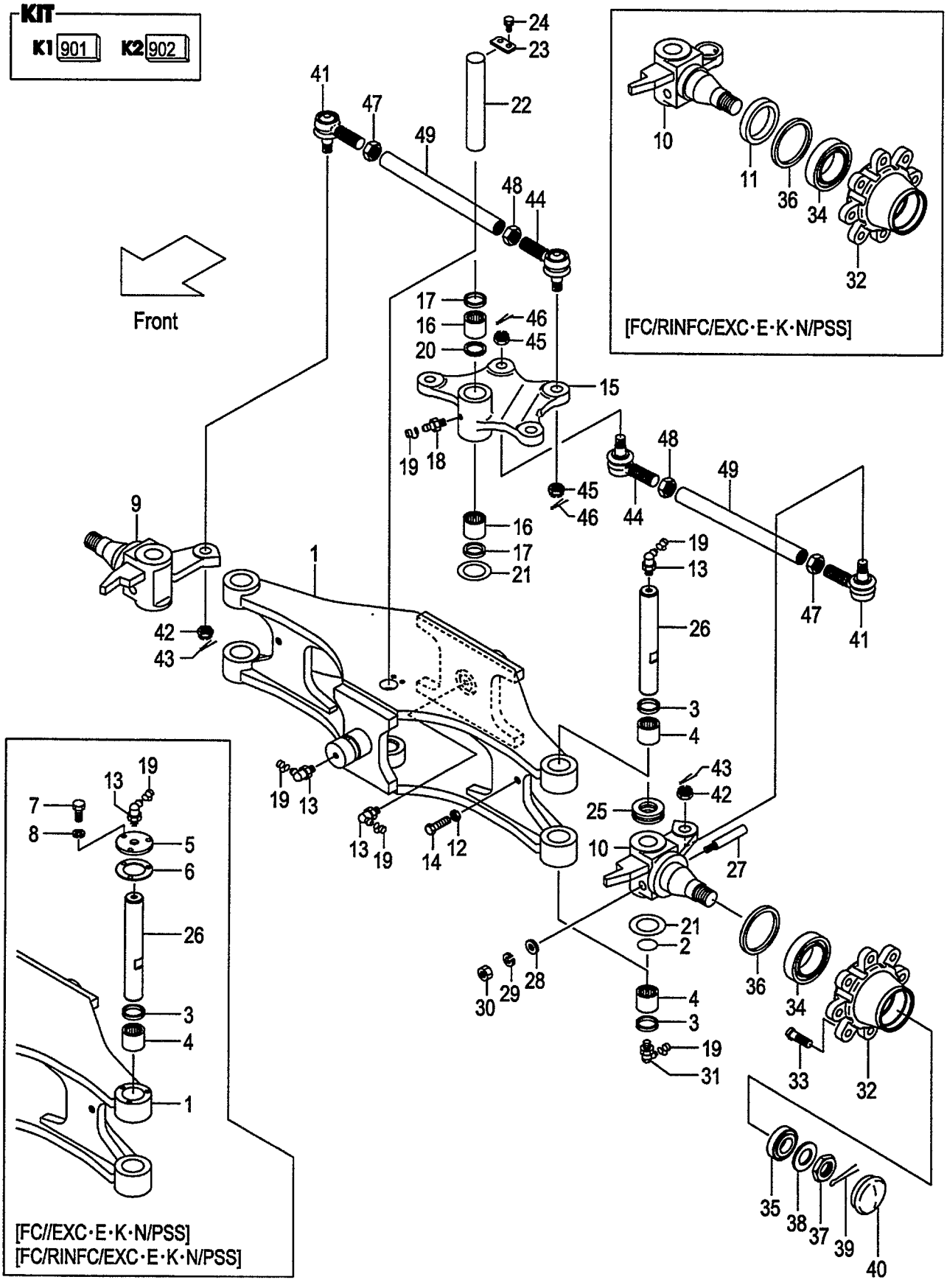

FIG.86
(F6024330)

A:FD20C7 FD20T7 FD25C7 FD25T7

Item No	Part No.	Mark	Description		Req'd	Remarks : Serial No.
31	04901-00191		FITTING	ﾌｨｯﾃｨﾝｸﾞ	2	[EXC&E&K&N/PSS]
32	214A4-32041		HUB,REAR	ﾊﾌﾞ	2	[EXC&E&K&N/PSS]
33	23654-32041		BOLT,HUB	ﾎﾞﾙﾄ	16	[EXC&E&K&N/PSS]
34	03071-30211		BRG,TAPER-ROLLER	ﾍﾞｱﾘﾝｸﾞ	2	[EXC&E&K&N/PSS]
35	03071-30207		BRG,TAPER-ROLLER	ﾍﾞｱﾘﾝｸﾞ	2	[EXC&E&K&N/PSS]
36	03217-08501		SEAL,OIL	ｼｰﾙ	2	[EXC&E&K&N/PSS]
37	01412-00030		NUT,CASTLE	ﾅｯﾄ	2	[EXC&E&K&N/PSS]
38	02000-00030		WASHER	ﾜｯｼｬ	2	[EXC&E&K&N/PSS]
39	02200-06055		PIN,COTTER	ﾋﾟﾝ	2	[EXC&E&K&N/PSS]
40	214A4-32051		CAP	ｷｬｯﾌﾟ	2	[EXC&E&K&N/PSS]
A2	24234-30551		END-ASSY,ROD,RH	ｴﾝﾄﾞｱｯｾﾝ	2	[EXC&E&K&N/PSS] INC.41-43
41	NO PART NO.	#	END,ROD,RH	ｴﾝﾄﾞ	2	[EXC&E&K&N/PSS]
42	01412-10016		NUT,CASTLE	ﾅｯﾄ	2	[EXC&E&K&N/PSS]
43	02200-32032		PIN,COTTER	ﾋﾟﾝ	2	[EXC&E&K&N/PSS]
A3	24234-30561		END-ASSY,ROD,LH	ｴﾝﾄﾞｱｯｾﾝ	2	[EXC&E&K&N/PSS] INC.44-46
44	NO PART NO.	#	END,ROD,LH	ｴﾝﾄﾞ	2	[EXC&E&K&N/PSS]
45	01412-10016		NUT,CASTLE	ﾅｯﾄ	2	[EXC&E&K&N/PSS]
46	02200-32032		PIN,COTTER	ﾋﾟﾝ	2	[EXC&E&K&N/PSS]
47	24234-32411		NUT,RH	ﾅｯﾄ	2	[EXC&E&K&N/PSS]
48	24234-32421		NUT,LH	ﾅｯﾄ	2	[EXC&E&K&N/PSS]
49	214A4-32131		ROD,TIE	ﾛｯﾄﾞ	2	[EXC&E&K&N/PSS]

FIG.87 AXLE SUPPORT
(F6024360) アクスルサポート

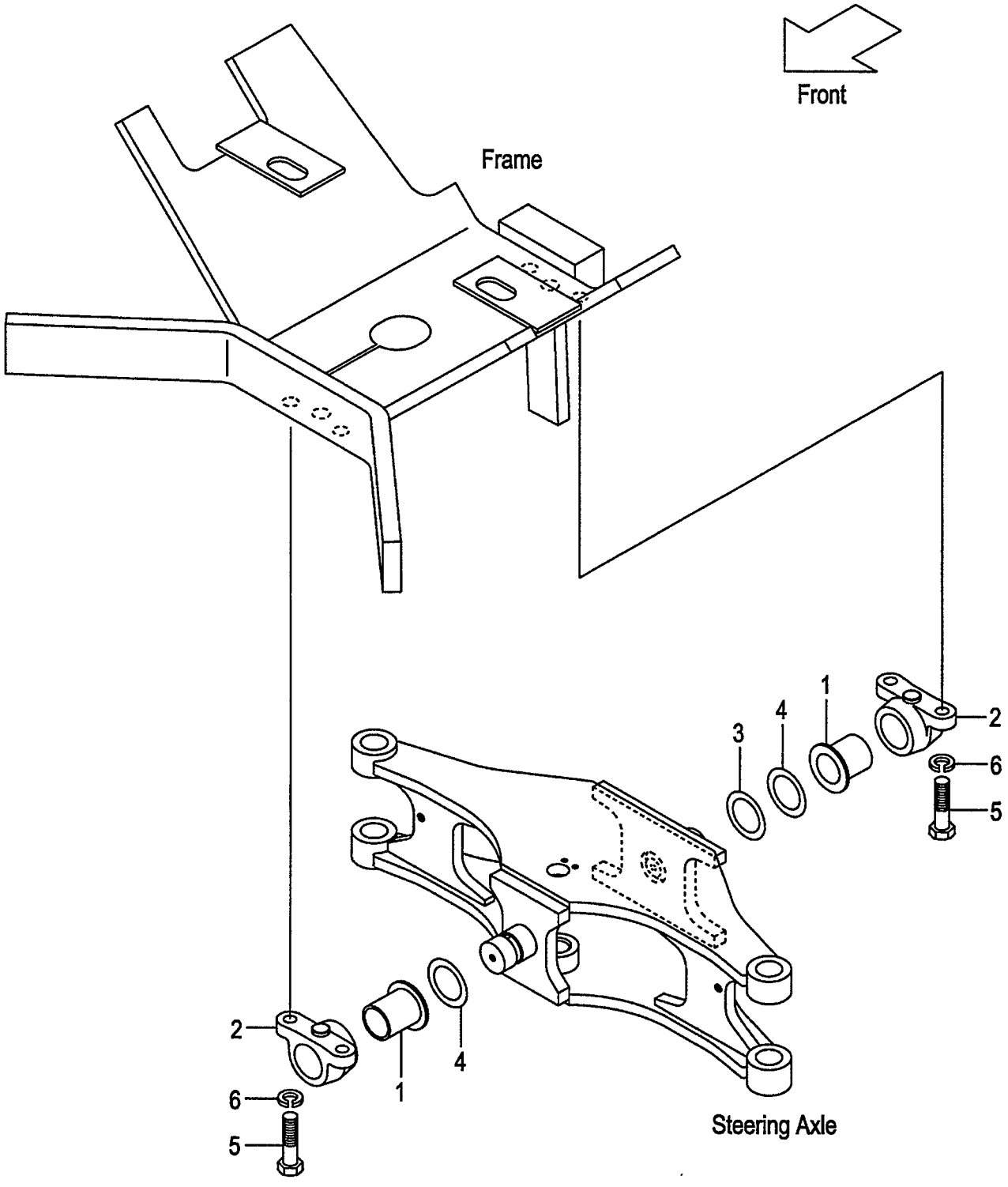

A:FD20C18 FD20T18 FD25C18 FD25T18
B:FD20C7 FD20T7 FD25C7 FD25T7 FD20W7 FD25W7

FIG.87
(F6024360)

Item No	Part No.	Mark	Description		Req'd	Remarks : Serial No.
1	214A6-12601		BUSHING	ﾌﾞｯｼﾝｸﾞ	2	
2	238G6-12401		SUPPORT,REAR-AXLE	ｻﾎﾟｰﾄ	2	
3	214A4-32201		SHIM,T-0.5	ｼﾑ	1	
4	214A4-32211		SHIM,T-1.0	ｼﾑ	2	
5	01100-16045		BOLT	ﾎﾞﾙﾄ	4	
6	02010-00016		WASHER	ﾜｯｼｬ	4	

FIG.88 HUB NUT
(F6024410) ﾊﾌﾞﾅｯﾄ

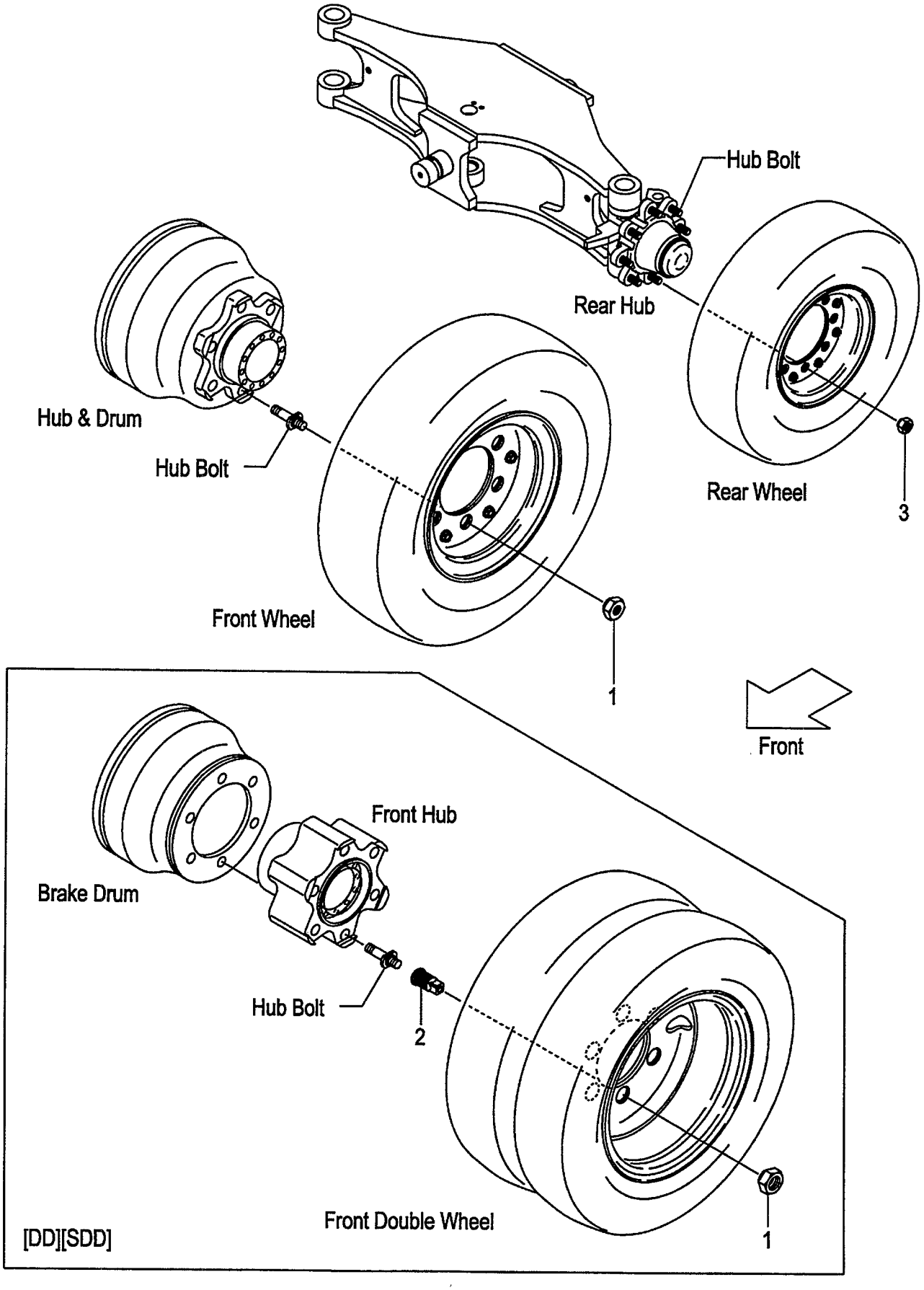

A:FD20C18 FD20T18 FD25C18 FD25T18
B:FD20C7 FD20T7 FD25C7 FD25T7 FD20W7 FD25W7

FIG.88
(F6024410)

Item No	Part No.	Mark	Description	Req'd	Remarks : Serial No.
1	24354-32311		NUT,HUB ナット	12	(FRONT)
-	57045-52141		NUT,HUB ナット	12	[FC](FRONT)
-	23813-00081		NUT,HUB ナット	12	[DD][SDD](FRONT)
-	514A3-72101		NUT,HUB ナット	12	[FC/DD][FC/SDD](FRONT)
2	23813-00071		NUT,INNER ナット	12	[DD][SDD][FC/DD][FC/SDD] (FRONT)
3	23654-34051		NUT,HUB ナット	16	(REAR)
-	57045-52151		NUT,HUB ナット	16	[FC](REAR)

FIG.89 FENDER [DD][SDD][TUJSF]

(F6024420) ﾌｪﾝﾀﾞ

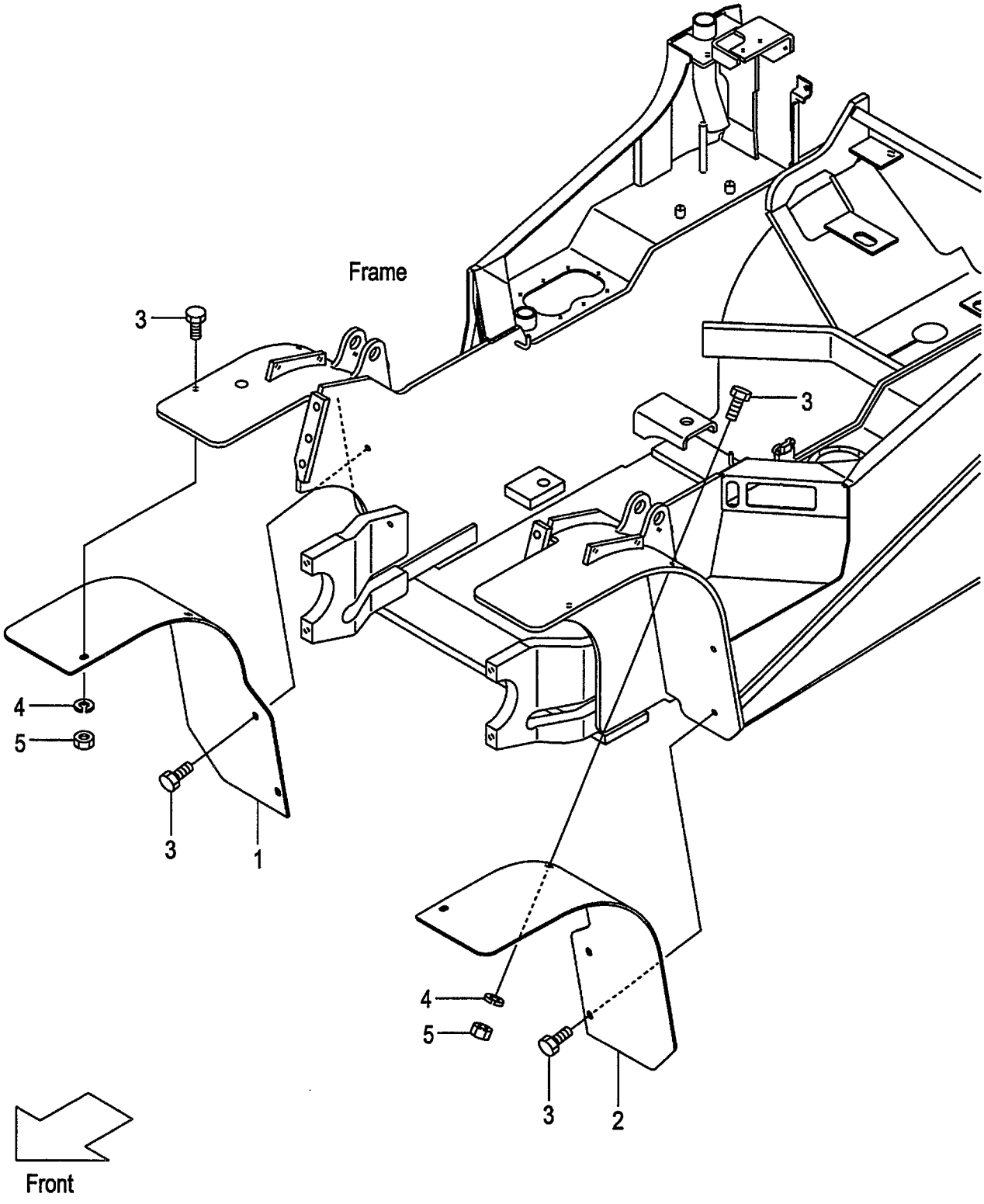

A:FD20C18 FD20T18 FD25C18 FD25T18
B:FD20C7 FD20T7 FD25C7 FD25T7 FD20W7 FD25W7

FIG.89
(F6024420)

Item No	Part No.	Mark	Description		Req'd	Remarks : Serial No.
1	539B7-42001		FENDER,FRONT,RH	ﾌｪﾝﾀﾞ	1	[DD]
-	539B7-42021		FENDER,FRONT,RH	ﾌｪﾝﾀﾞ	1	[SDD]
-	539B7-42061		FENDER,FRONT,RH	ﾌｪﾝﾀﾞ	1	[TUJSF]
2	539B7-42011		FENDER,FRONT,LH	ﾌｪﾝﾀﾞ	1	[DD]
-	539B7-42031		FENDER,FRONT,LH	ﾌｪﾝﾀﾞ	1	[SDD]
-	539B7-42071		FENDER,FRONT,LH	ﾌｪﾝﾀﾞ	1	[TUJSF]
3	01186-10030		BOLT	ﾎﾞﾙﾄ	8	[DD][SDD][TUJSF]
4	02000-00010		WASHER	ﾜｯｼｬ	4	[DD][SDD][TUJSF]
5	01400-00010		NUT	ﾅｯﾄ	4	[DD][SDD][TUJSF]

FIG.90 FRONT WHEEL
(F6024430) フロントホイール

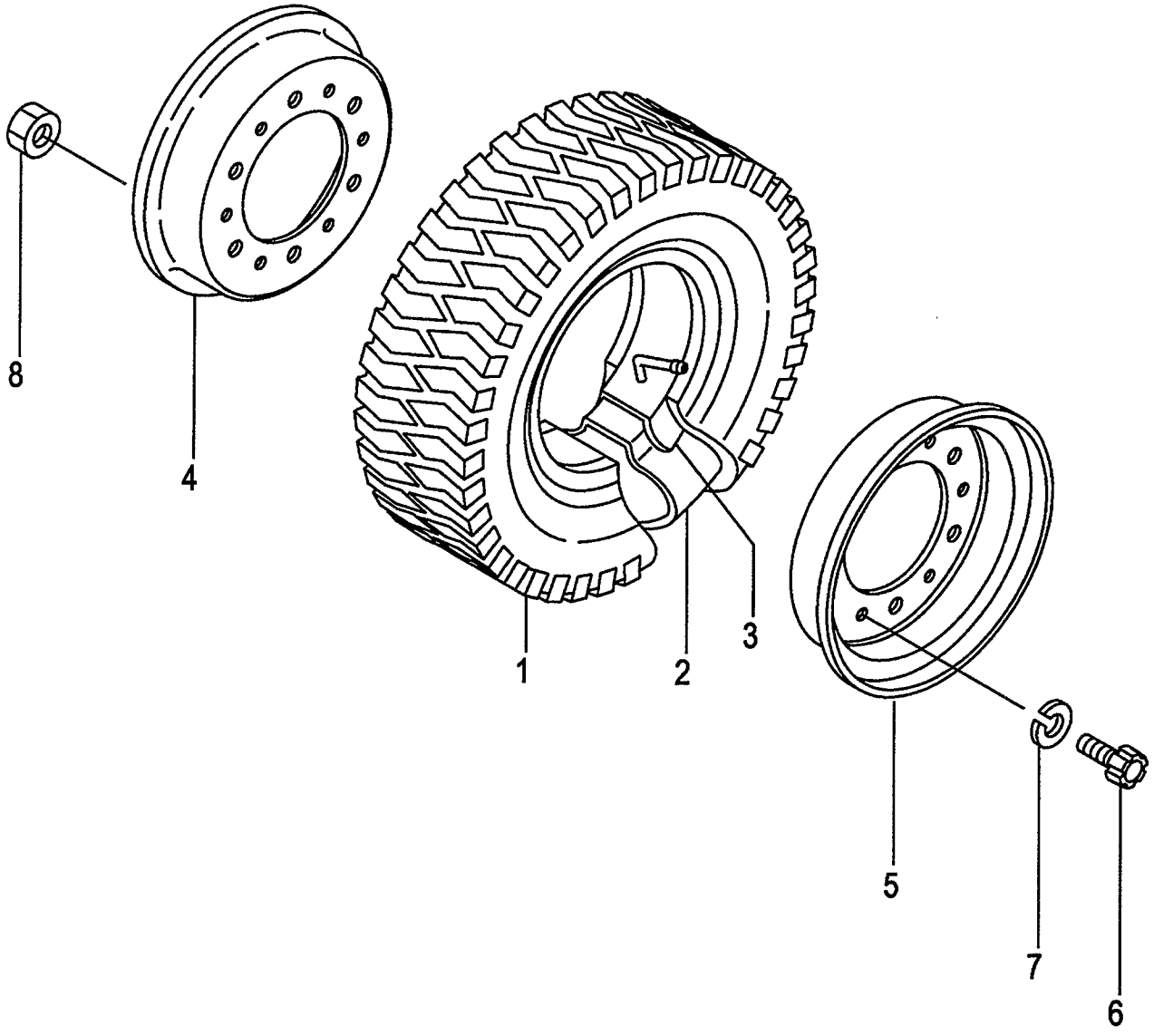

A:FD20C18 FD20T18 FD25C18 FD25T18
B:FD20C7 FD20T7 FD25C7 FD25T7 FD20W7 FD25W7

Item No	Part No.	Mark	Description		Req'd	Remarks : Serial No.
A1	53456-80902		WHEEL-ASSY,FRONT	フロントホイールアッセン	2	INC.1-8
1	06006-70012		TIRE,700-12-12	タイヤ	2	
2	06711-70012		TUBE,700-12-12T	チューブ゛	2	
3	06701-70012		FLAP,700-12-12F	フラップ゜	2	
A2	23454-40501		RIM-ASSY,500S-12	リムアッセン	2	INC.4-8
4	NO PART NO.	#	RIM,INSIDE	リム	2	
5	NO PART NO.	#	RIM,OUTSIDE	リム	2	
6	514A3-82601		BOLT	ボ゛ルト	12	
7	02011-00016		WASHER	ワッシャ	12	
8	01400-10016		NUT	ナット	12	

FIG.91 FRONT WHEEL [DR F]

(F6024440) フロントホイール

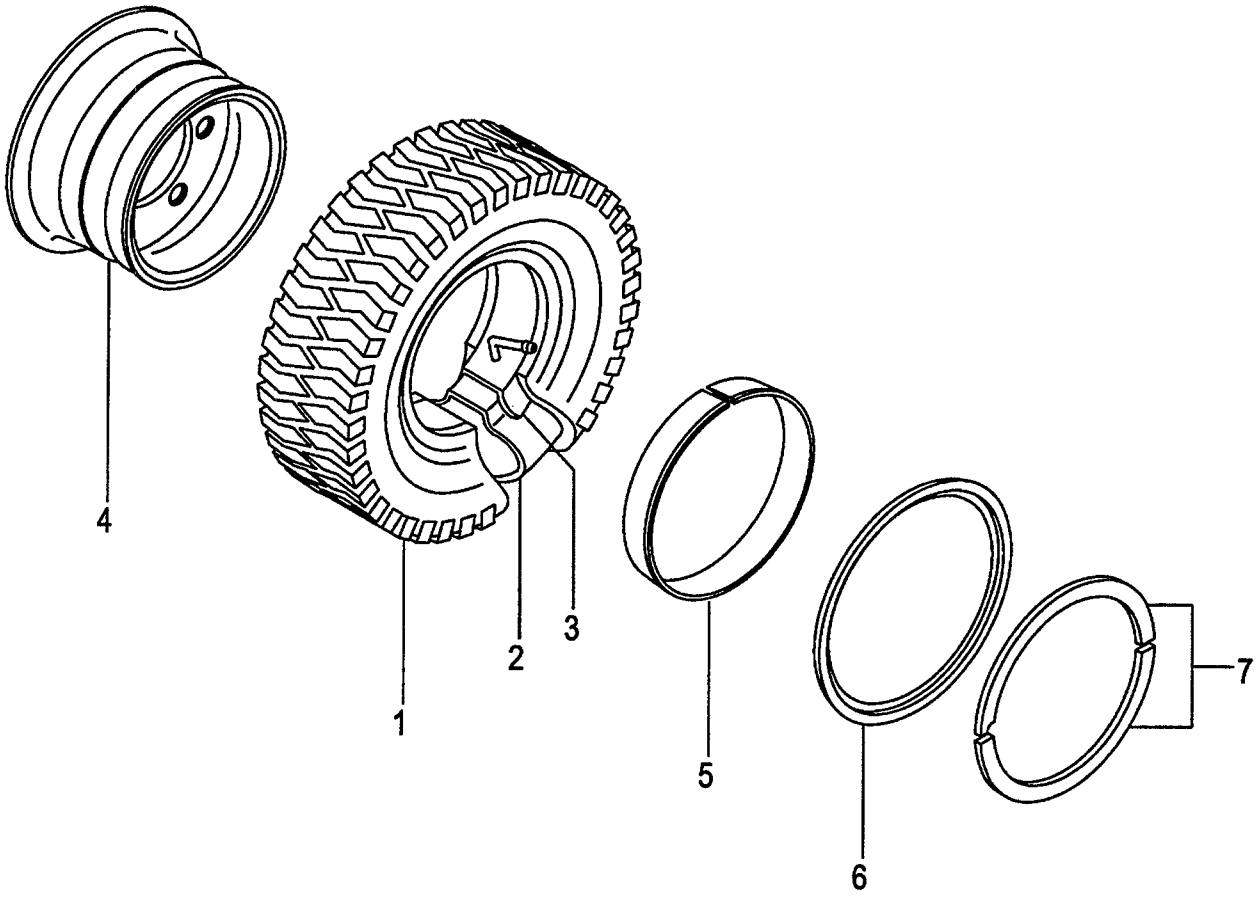

A:FD20C18 FD20T18 FD25C18 FD25T18
B:FD20C7 FD20T7 FD25C7 FD25T7 FD20W7 FD25W7

FIG.91
(F6024440)

Item No	Part No.	Mark	Description		Req'd	Remarks : Serial No.
A1	53666-80601		WHEEL-ASSY,FRONT	ﾌﾛﾝﾄﾎｲｰﾙｱｯｾﾝ	2	[DR F] INC.1-7
1	06006-70012		TIRE,700-12-12	ﾀｲﾔ	2	[DR F]
2	06711-70012		TUBE,700-12-12T	ﾁｭｰﾌﾞ	2	[DR F]
3	06701-70012		FLAP,700-12-12F	ﾌﾗｯﾌﾟ	2	[DR F]
A2	53666-81801		RIM-ASSY,500S-12	ﾘﾑｱｯｾﾝ	2	[DR F] INC.4-7
4	NO PART NO.	#	RIM	ﾘﾑ	2	[DR F]
5	53656-82041		BAND	ﾊﾞﾝﾄﾞ	2	[DR F]
6	53656-82051		FLANGE,SIDE	ﾌﾗﾝｼﾞ	2	[DR F]
7	53656-82061		RING,LOCK	ﾘﾝｸﾞ	2	[DR F]

FIG.92 FRONT WHEEL [TJ F][TJSF][T F][TS F]

(F6024450) フロントホイール

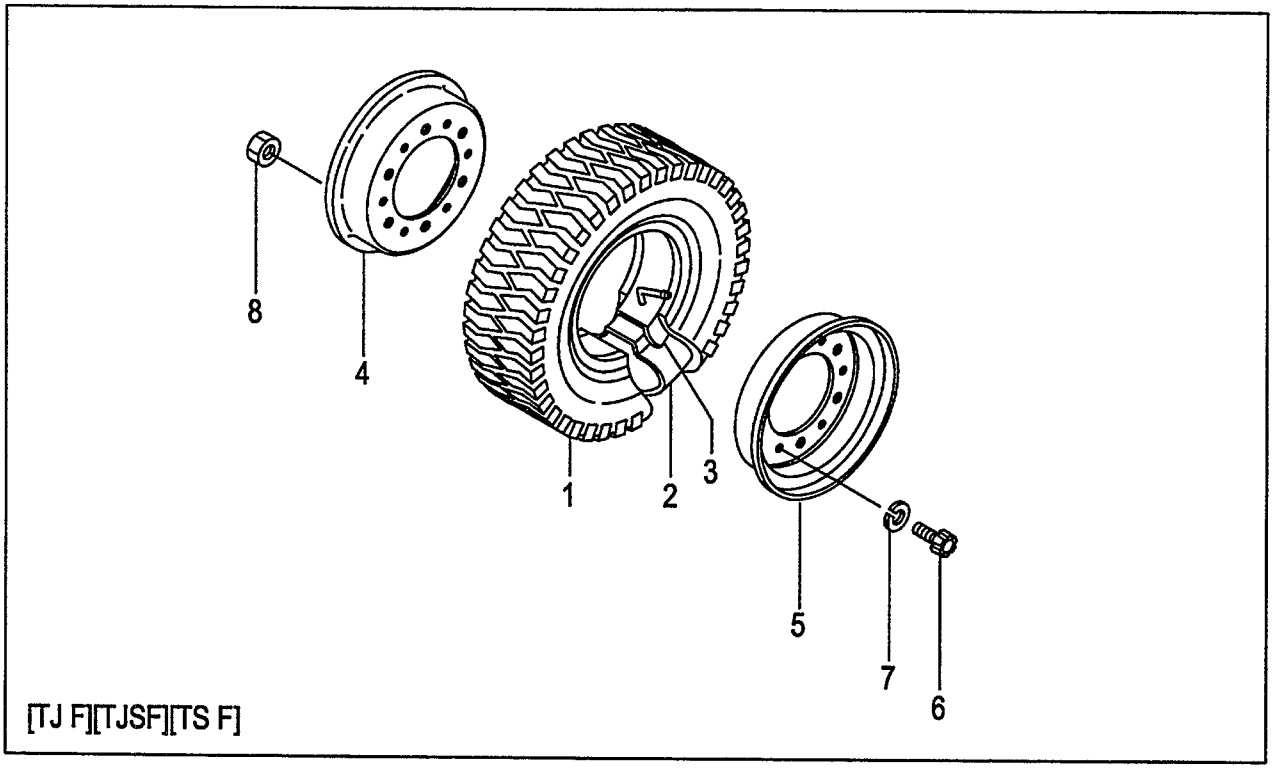

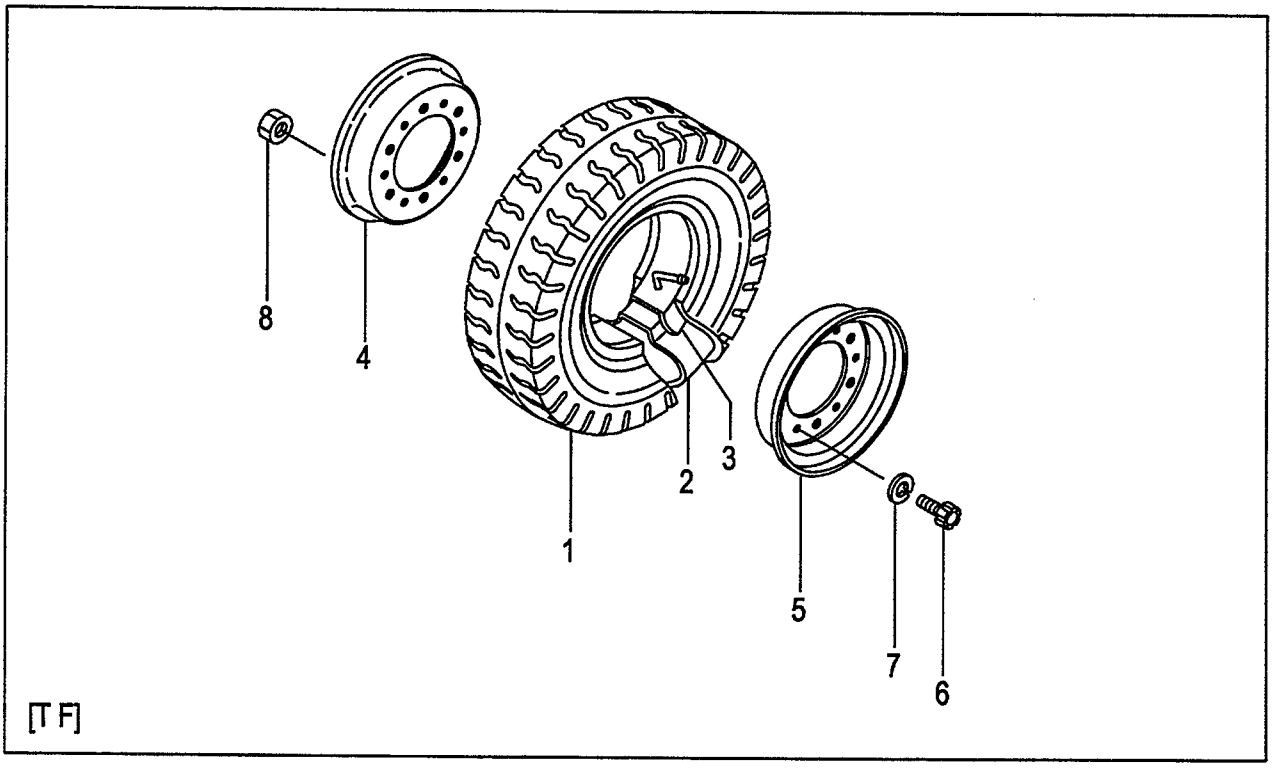

A:FD20C18 FD20T18 FD25C18 FD25T18
B:FD20C7 FD20T7 FD25C7 FD25T7 FD20W7 FD25W7

FIG.92
(F6024450)

Item No	Part No.	Mark	Description		Req'd	Remarks : Serial No.
A1	53456-80902		WHEEL-ASSY,FRONT	ﾌﾛﾝﾄﾎｲｰﾙｱｯｾﾝ	2	[TJ F] INC.1-8
-	53456-80702		WHEEL-ASSY,FRONT	ﾌﾛﾝﾄﾎｲｰﾙｱｯｾﾝ	2	[TJSF] INC.1-8
-	23454-40601		WHEEL-ASSY,FRONT	ﾌﾛﾝﾄﾎｲｰﾙｱｯｾﾝ	2	[T F] INC.1-8
-	53456-80502		WHEEL-ASSY,FRONT	ﾌﾛﾝﾄﾎｲｰﾙｱｯｾﾝ	2	[TS F] INC.1-8
1	06006-70012		TIRE,700-12-12	ﾀｲﾔ	2	[TJ F]
-	06005-70012		TIRE,700-12-12	ﾀｲﾔ	2	[TJSF]
-	06001-70012		TIRE,700-12-12	ﾀｲﾔ	2	[T F]
-	06007-70012		TIRE,700-12-12	ﾀｲﾔ	2	[TS F]
2	06711-70012		TUBE,700-12-12T	ﾁｭｰﾌﾞ	2	[TJ F][TJSF][T F][TS F]
3	06701-70012		FLAP,700-12-12F	ﾌﾗｯﾌﾟ	2	[TJ F][TJSF][T F][TS F]
A2	23454-40501		RIM-ASSY,500S-12	ﾘﾑｱｯｾﾝ	2	[TJ F][TJSF][T F][TS F] INC.4-8
4	NO PART NO.	#	RIM,INSIDE	ﾘﾑ	2	[TJ F][TJSF][T F][TS F]
5	NO PART NO.	#	RIM,OUTSIDE	ﾘﾑ	2	[TJ F][TJSF][T F][TS F]
6	514A3-82601		BOLT	ﾎﾞﾙﾄ	12	[TJ F][TJSF][T F][TS F]
7	02011-00016		WASHER	ﾜｯｼｬ	12	[TJ F][TJSF][T F][TS F]
8	01400-10016		NUT	ﾅｯﾄ	12	[TJ F][TJSF][T F][TS F]

FIG.93 FRONT WHEEL [(TJ F,TJSF,T F,TS F)/DR F]

(F6024460) フロントホイール

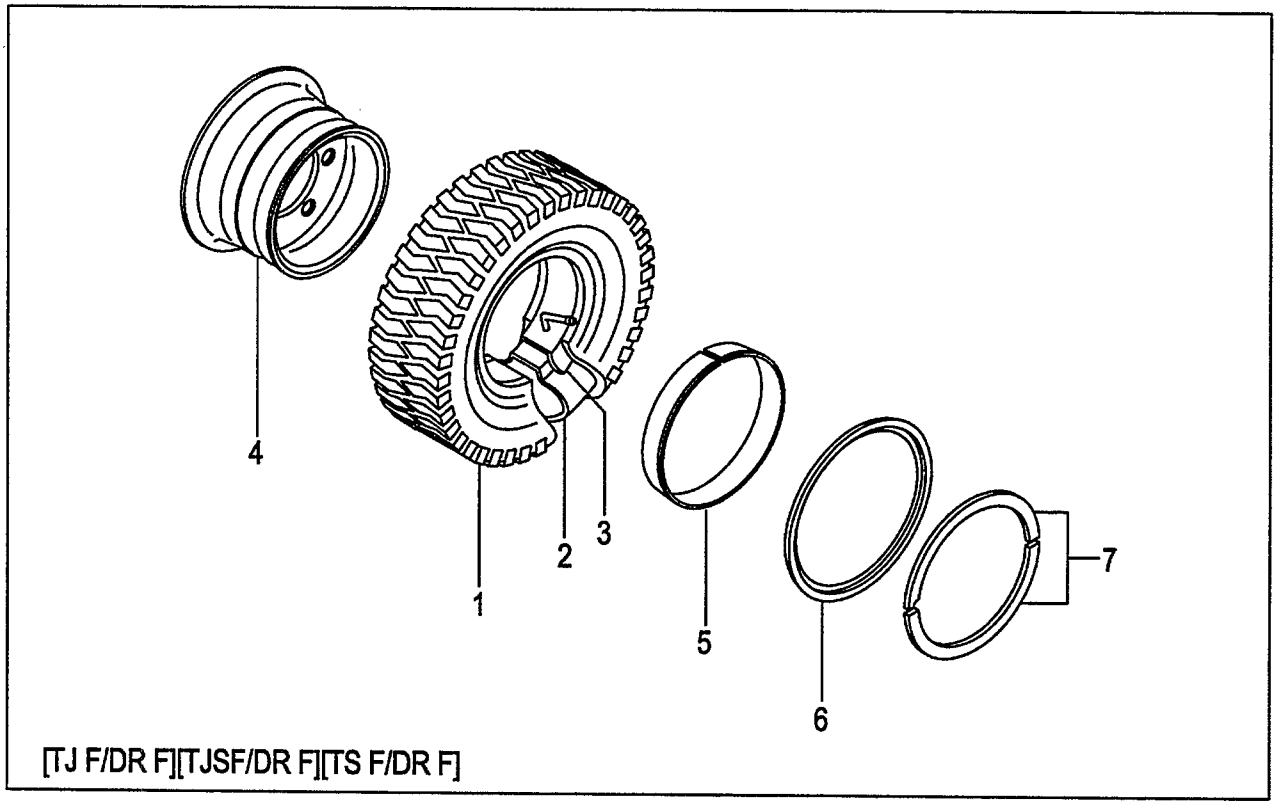

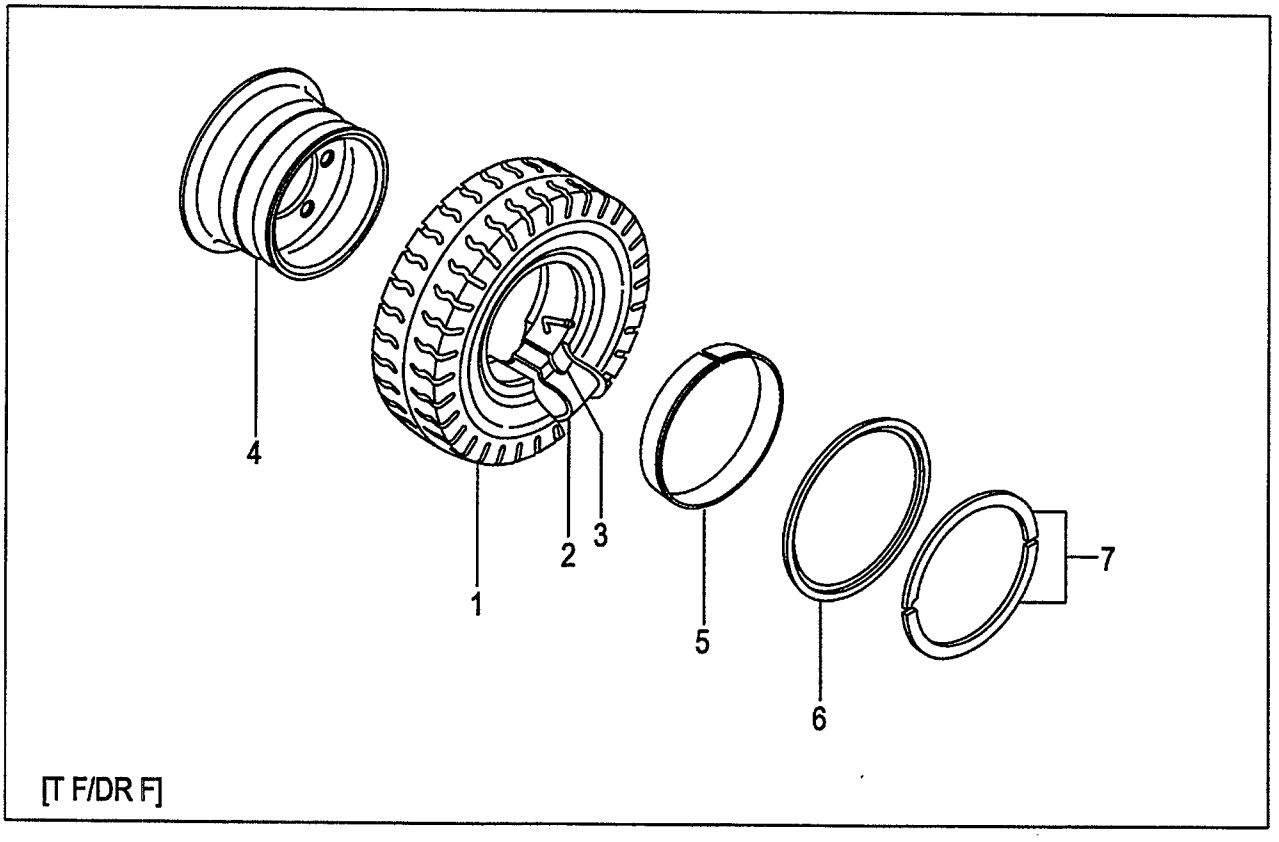

A:FD20C18 FD20T18 FD25C18 FD25T18
B:FD20C7 FD20T7 FD25C7 FD25T7 FD20W7 FD25W7

FIG.93
(F6024460)

Item No	Part No.	Mark	Description		Req'd	Remarks : Serial No.
A1	53666-80601		WHEEL-ASSY,FRONT	フロントホイールアッセン	2	[TJ F/DR F] INC.1-7
-	53666-80501		WHEEL-ASSY,FRONT	フロントホイールアッセン	2	[TJSF/DR F] INC.1-7
-	53666-80201		WHEEL-ASSY,FRONT	フロントホイールアッセン	2	[T F/DR F] INC.1-7
-	53666-80701		WHEEL-ASSY,FRONT	フロントホイールアッセン	2	[TS F/DR F] INC.1-7
1	06006-70012		TIRE,700-12-12	タイヤ	2	[TJ F/DR F]
-	06005-70012		TIRE,700-12-12	タイヤ	2	[TJSF/DR F]
-	06001-70012		TIRE,700-12-12	タイヤ	2	[T F/DR F]
-	06007-70012		TIRE,700-12-12	タイヤ	2	[TS F/DR F]
2	06711-70012		TUBE,700-12-12T	チューブ゛	2	[TJ F/DR F][TJSF/DR F]
						[T F/DR F][TS F/DR F]
3	06701-70012		FLAP,700-12-12F	フラップ゜	2	[TJ F/DR F][TJSF/DR F]
						[T F/DR F][TS F/DR F]
A2	53666-81801		RIM-ASSY,500S-12	リムアッセン	2	[TJ F/DR F][T F/DR F] INC.4-7
-	53666-81801		RIM-ASSY,500S-12	リムアッセン	2	[TJSF/DR F][TS F/DR F] INC.4-7
4	NO PART NO.	#	RIM	リム	2	[TJ F/DR F][TJSF/DR F]
						[T F/DR F][TS F/DR F]
5	53656-82041		BAND	バンド゛	2	[TJ F/DR F][TJSF/DR F]
						[T F/DR F][TS F/DR F]
6	53656-82051		FLANGE,SIDE	フランジ゛	2	[TJ F/DR F][TJSF/DR F]
						[T F/DR F][TS F/DR F]
7	53656-82061		RING,LOCK	リング゛	2	[TJ F/DR F][TJSF/DR F]
						[T F/DR F][TS F/DR F]

FIG.94 FRONT WHEEL [TUJF][TUSF][TUWF][TUGF]

(F6024470) フロントホイール

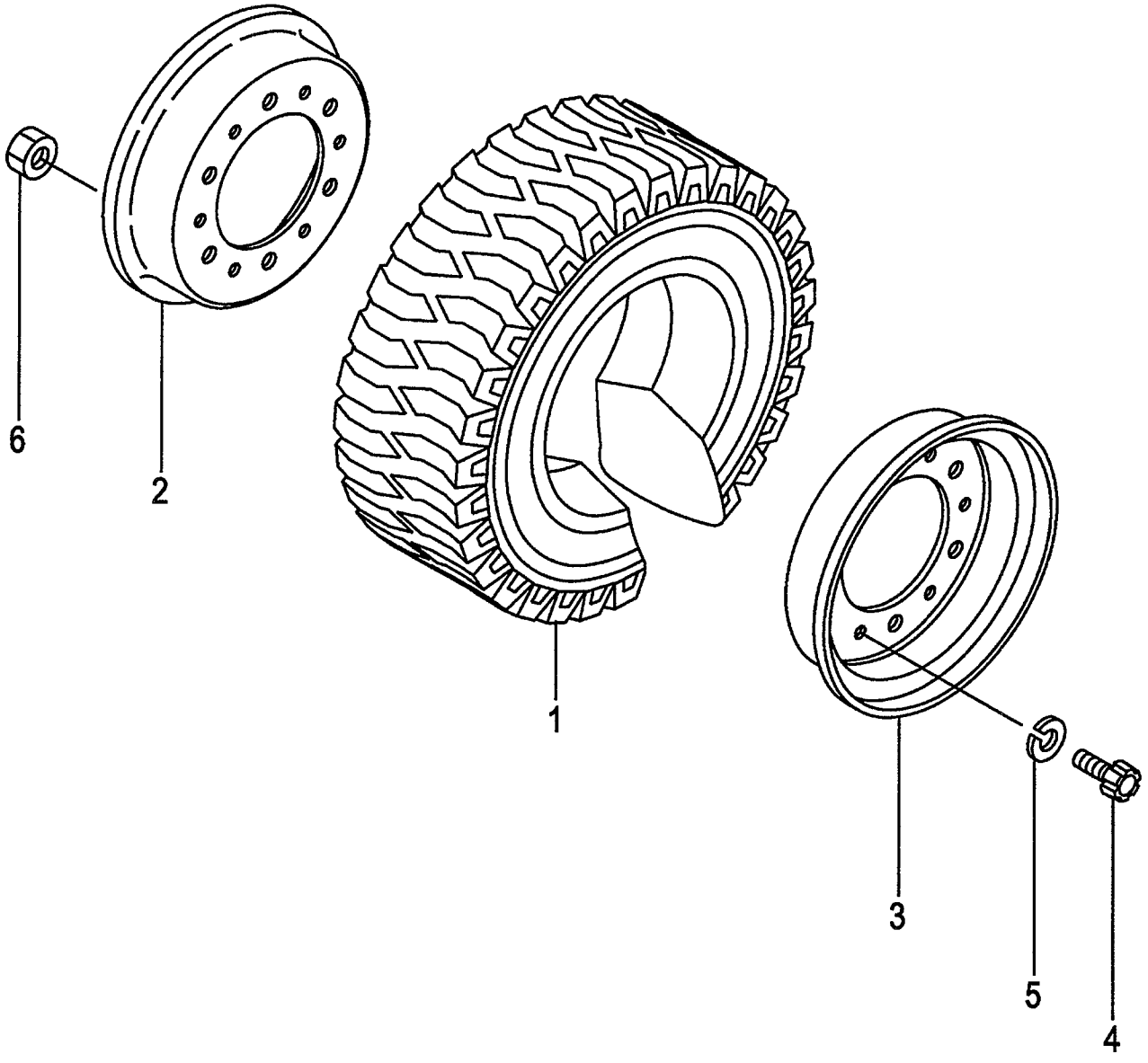

A:FD20C18 FD20T18 FD25C18 FD25T18
B:FD20C7 FD20T7 FD25C7 FD25T7
C:FD20W7 FD25W7

FIG.94
(F6024470)

Item No	Part No.	Mark	Description		Req'd	Remarks : Serial No.
A1	52676-80601		WHEEL-ASSY,FRONT	フロントホイールアッセン	2	[TUJF] INC.1-6
-	52676-80601		WHEEL-ASSY,FRONT	フロントホイールアッセン	2	[TUJF] INC.1-6
-	522A3-80401		WHEEL-ASSY,FRONT	フロントホイールアッセン	2	[TUJF] INC.1-6
-	522A3-80401		WHEEL-ASSY,FRONT	フロントホイールアッセン	2	B [TUJF/EX] INC.1-6
-	522A6-80221		WHEEL-ASSY,FRONT	フロントホイールアッセン	2	[TUSF] INC.1-6
-	522A6-80201		WHEEL-ASSY,FRONT	フロントホイールアッセン	2	[TUWF] INC.1-6
-	522A6-80211		WHEEL-ASSY,FRONT	フロントホイールアッセン	2	[TUGF] INC.1-6
1	06806-70012		TIRE,UNIQUE,700-12	タイヤ	2	[TUJF]
-	06806-70012		TIRE,UNIQUE,700-12	タイヤ	2	[TUJF]
-	06807-70012		TIRE,UNIQUE,700-12	タイヤ	2	[TUJF]
-	06807-70012		TIRE,UNIQUE,700-12	タイヤ	2	B [TUJF/EX]
-	06851-70012		TIRE,SOFTONE,700-12	タイヤ	2	[TUSF]
-	06841-70012		TIRE,WHITE,700-12	タイヤ	2	[TUWF]
-	06843-70012		TIRE,GREEN,700-12	タイヤ	2	[TUGF]
A2	23454-40501		RIM-ASSY,500S-12	リムアッセン	2	[TUJF][TUSF][TUWF][TUGF] INC.2-6
2	NO PART NO.	#	RIM,INSIDE	リム	2	[TUJF][TUSF][TUWF][TUGF]
3	NO PART NO.	#	RIM,OUTSIDE	リム	2	[TUJF][TUSF][TUWF][TUGF]
4	514A3-82601		BOLT	ボルト	12	[TUJF][TUSF][TUWF][TUGF]
5	02011-00016		WASHER	ワッシャ	12	[TUJF][TUSF][TUWF][TUGF]
6	01400-10016		NUT	ナット	12	[TUJF][TUSF][TUWF][TUGF]

FIG.95 FRONT WHEEL [TUJF/DR F]

(F6024480) フロントホイール

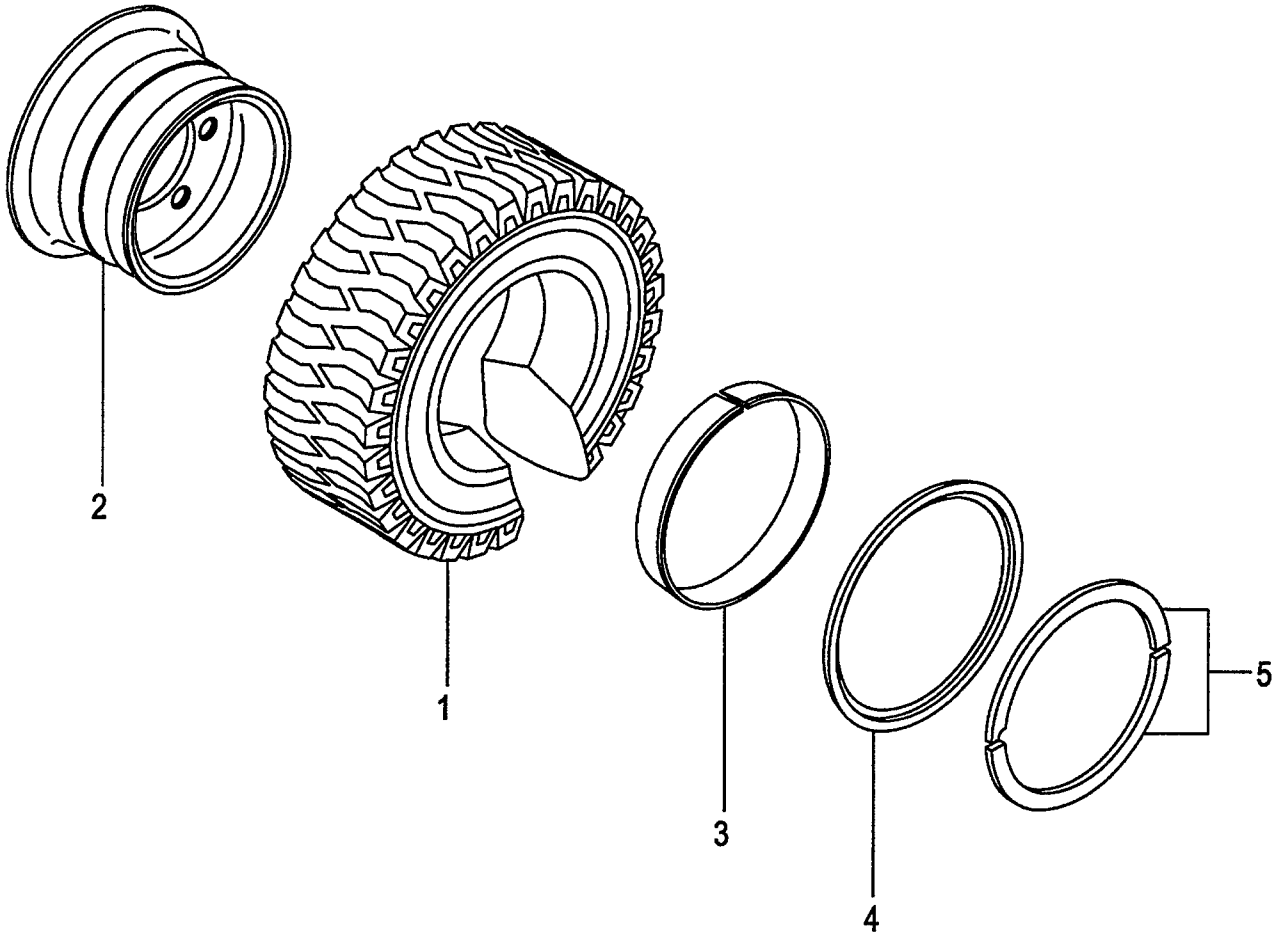

A:FD20C18 FD20T18 FD25C18 FD25T18
B:FD20C7 FD20T7 FD25C7 FD25T7 FD20W7 FD25W7

Item No	Part No.	Mark	Description		Req'd	Remarks : Serial No.
A1	53666-80401		WHEEL-ASSY,FRONT	ﾌﾛﾝﾄﾎｲｰﾙｱｯｾﾝ	2	[TUJF/DR F] INC.1-5
1	06806-70012		TIRE,UNIQUE,700-12	ﾀｲﾔ	2	[TUJF/DR F]
A2	53666-81801		RIM-ASSY,500S-12	ﾘﾑｱｯｾﾝ	2	[TUJF/DR F] INC.2-5
2	NO PART NO.	#	RIM	ﾘﾑ	2	[TUJF/DR F]
3	53656-82041		BAND	ﾊﾞﾝﾄﾞ	2	[TUJF/DR F]
4	53656-82051		FLANGE,SIDE	ﾌﾗﾝｼﾞ	2	[TUJF/DR F]
5	53656-82061		RING,LOCK	ﾘﾝｸﾞ	2	[TUJF/DR F]

FIG.96 FRONT WHEEL [TRAF]

(F6024490) フロントホイール

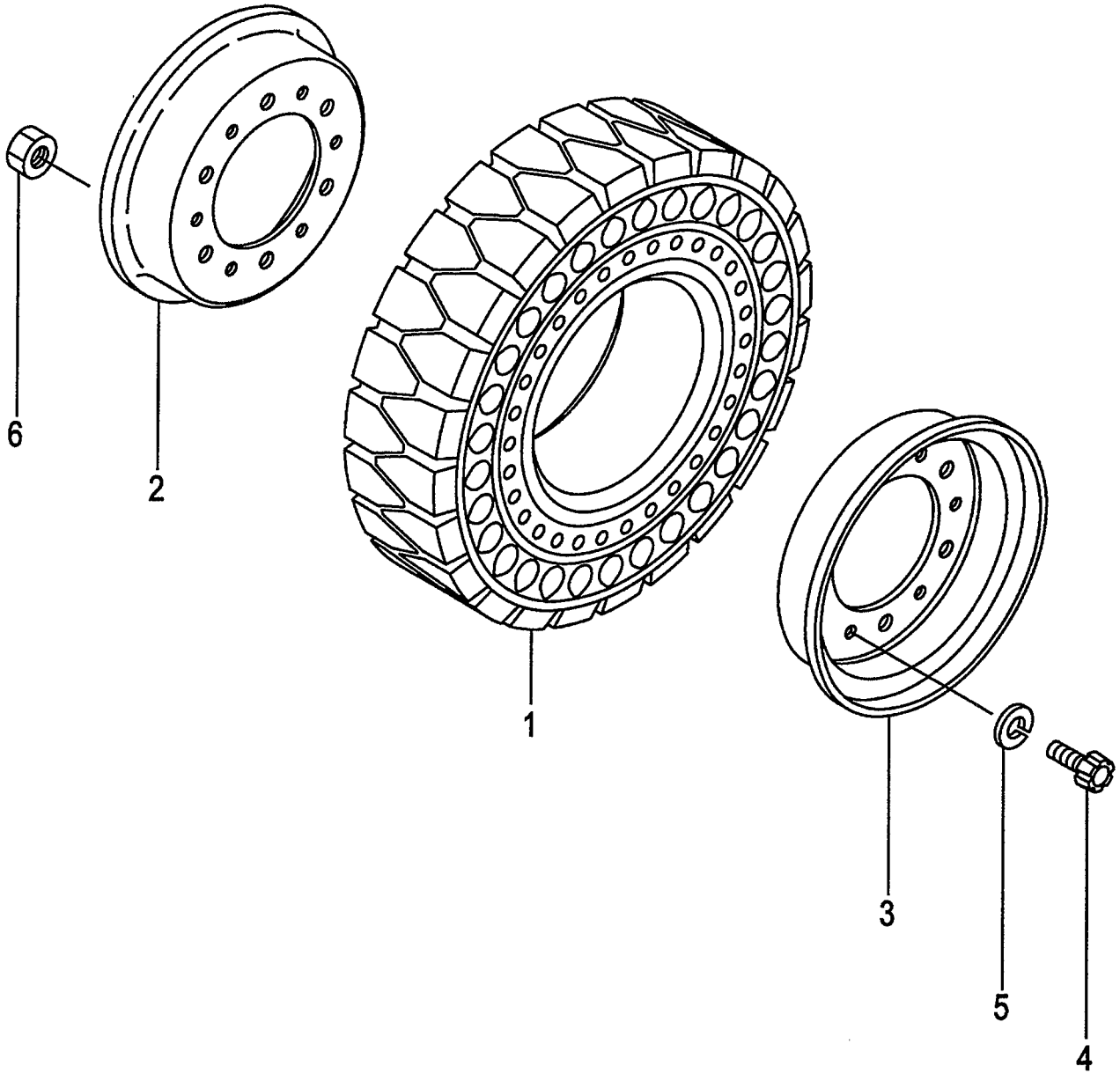

A:FD20C18 FD20T18 FD25C18 FD25T18
B:FD20C7 FD20T7 FD25C7 FD25T7 FD20W7 FD25W7

FIG.96
(F6024490)

Item No	Part No.	Mark	Description		Req'd	Remarks : Serial No.
A1	534A6-80171		WHEEL-ASSY,FRONT	フロントホイールアッセン	2	[TRAF] INC.1-6
1	534A6-85011		TIRE,AIR-BOSS,700-12	タイヤ	2	[TRAF]
A2	23454-40501		RIM-ASSY,500S-12	リムアッセン	2	[TRAF] INC.2-6
2	NO PART NO.	#	RIM,INSIDE	リム	2	[TRAF]
3	NO PART NO.	#	RIM,OUTSIDE	リム	2	[TRAF]
4	514A3-82601		BOLT	ボルト	12	[TRAF]
5	02011-00016		WASHER	ワッシャ	12	[TRAF]
6	01400-10016		NUT	ナット	12	[TRAF]

FIG.97 FRONT WHEEL [TUJSF]

(F60244A0) フロントホイール

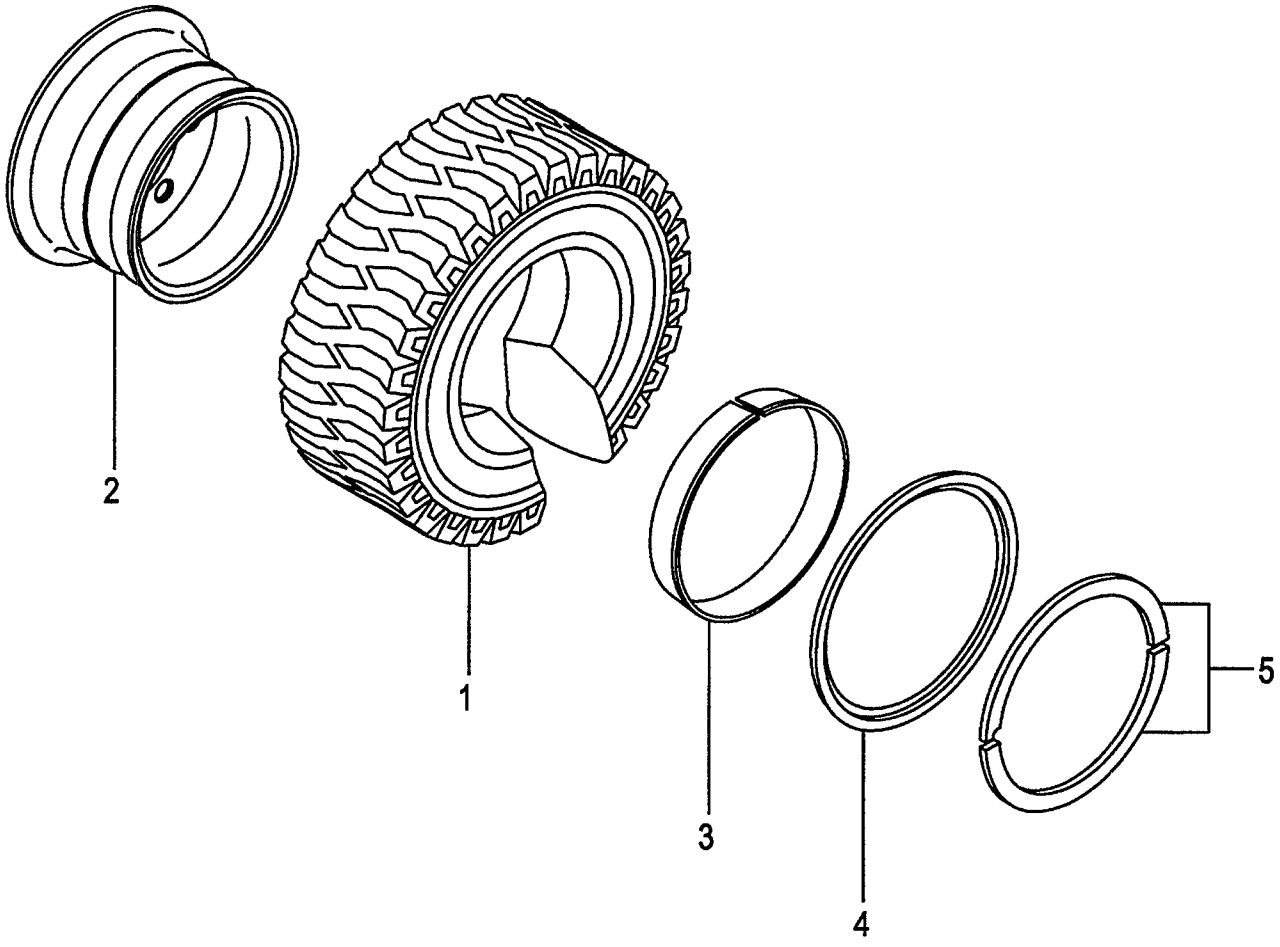

FIG.97
(F60244A0)

A:FD20C18 FD20T18 FD25C18 FD25T18
B:FD20C7 FD20T7 FD25C7 FD25T7 FD20W7 FD25W7

Item No	Part No.	Mark	Description		Req'd	Remarks : Serial No.
A1	62156-52501		WHEEL-ASSY,FRONT	ﾌﾛﾝﾄﾎｲｰﾙｱｯｾﾝ	2	[TUJSF] INC.1-5
1	06804-70012		TIRE,UNIQUE,700-12	ﾀｲﾔ	2	[TUJSF]
A2	22854-40201		RIM-ASSY,500S-12	ﾘﾑｱｯｾﾝ	2	[TUJSF] INC.2-5
2	NO PART NO.	#	RIM	ﾘﾑ	2	[TUJSF]
3	53656-82041		BAND	ﾊﾞﾝﾄﾞ	2	[TUJSF]
4	53656-82051		FLANGE,SIDE	ﾌﾗﾝｼﾞ	2	[TUJSF]
5	53656-82061		RING,LOCK	ﾘﾝｸﾞ	2	[TUJSF]

FIG.98 FRONT WHEEL [TJ W][TJSW][T W][TS W]

(F60244B0) フロントホイール

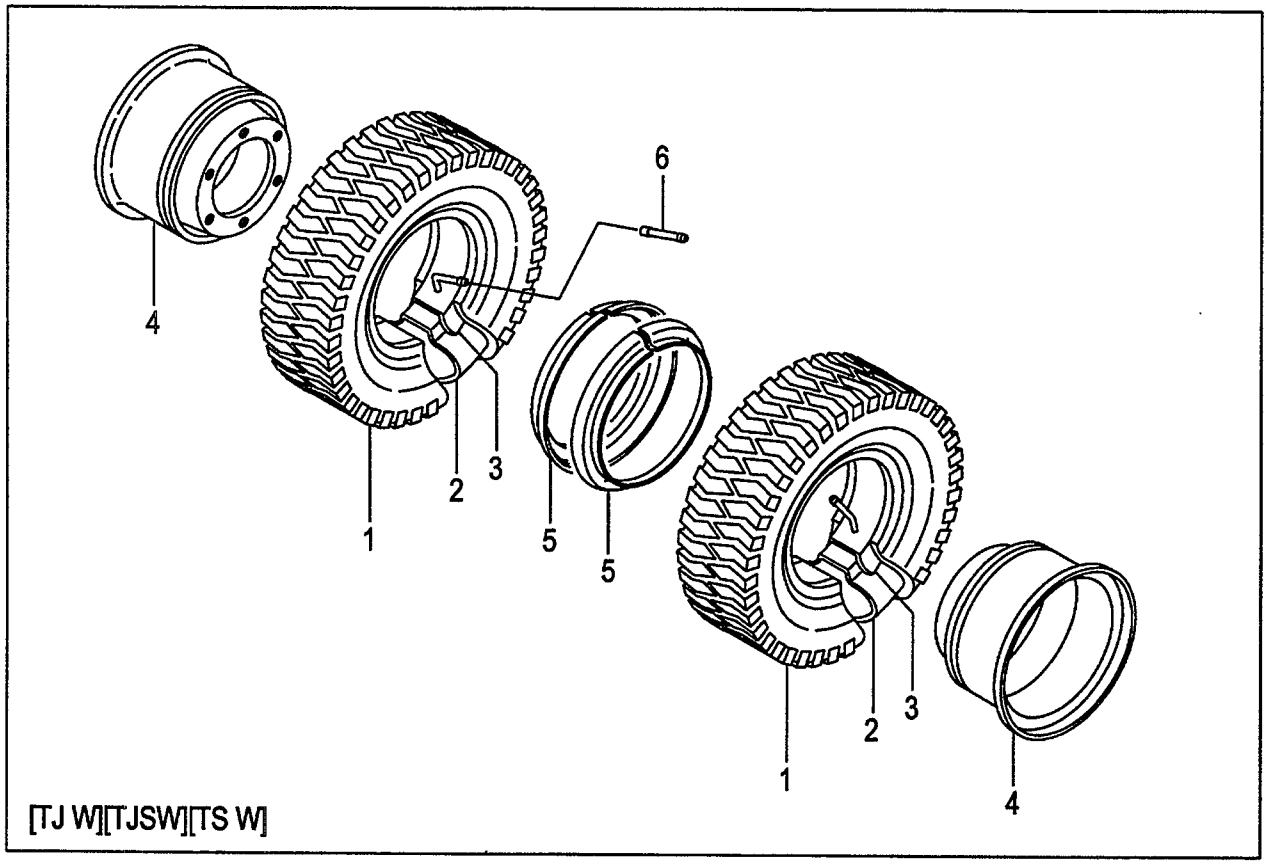

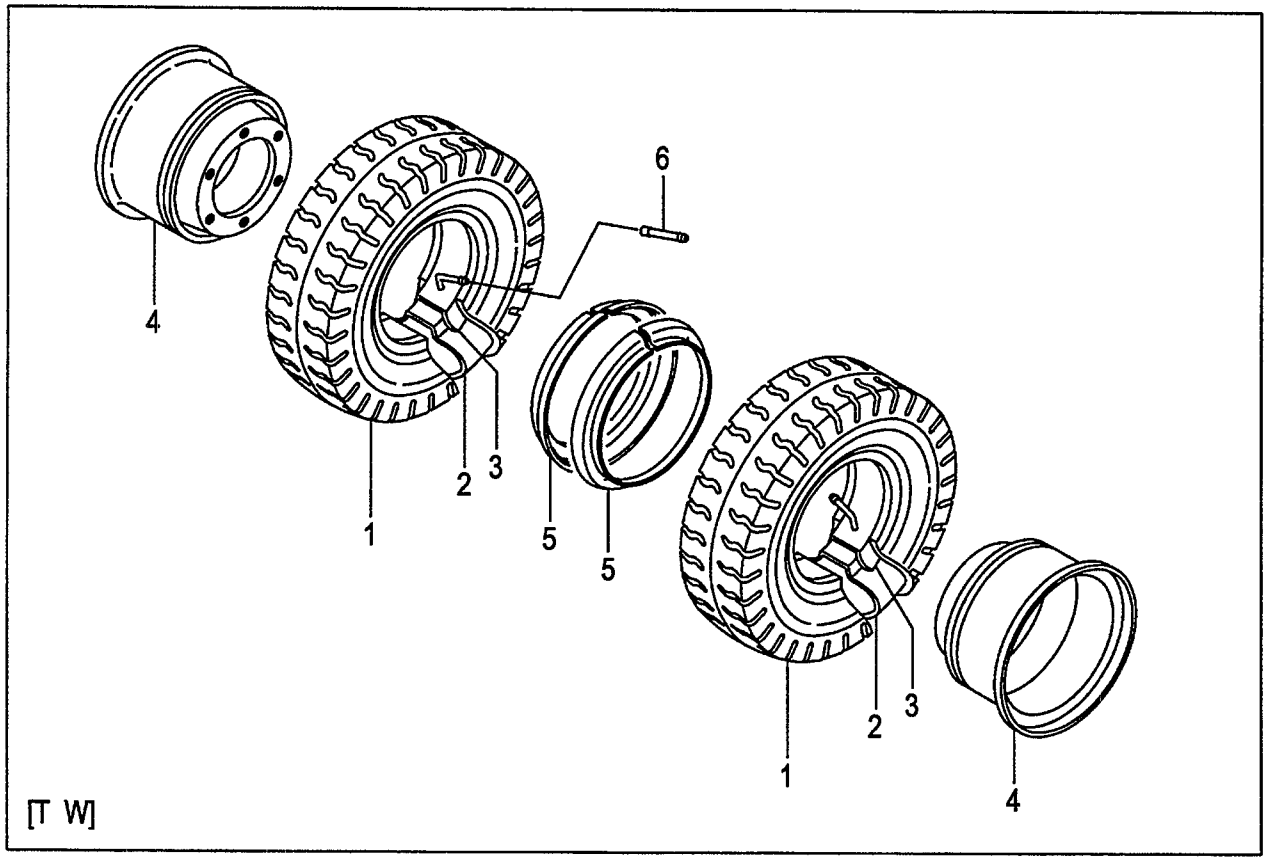

A:FD20C18 FD20T18 FD25C18 FD25T18
B:FD20C7 FD20T7 FD25C7 FD25T7 FD20W7 FD25W7

FIG.98
(F60244B0)

Item No	Part No.	Mark	Description		Req'd	Remarks : Serial No.
A1	52676-80402		WHEEL-ASSY,FRONT	ﾌﾛﾝﾄﾎｲｰﾙｱｯｾﾝ	4	[TJ W] INC.1-5
-	52676-80202		WHEEL-ASSY,FRONT	ﾌﾛﾝﾄﾎｲｰﾙｱｯｾﾝ	4	[TJSW] INC.1-5
-	53457-40003		WHEEL-ASSY,FRONT	ﾌﾛﾝﾄﾎｲｰﾙｱｯｾﾝ	4	[T W] INC.1-5
-	52676-80302		WHEEL-ASSY,FRONT	ﾌﾛﾝﾄﾎｲｰﾙｱｯｾﾝ	4	[TS W] INC.1-5
1	06006-55015		TIRE,550-15-8	ﾀｲﾔ	4	[TJ W]
-	06005-55015		TIRE,550-15-8	ﾀｲﾔ	4	[TJSW]
-	06001-55015		TIRE,550-15-8	ﾀｲﾔ	4	[T W]
-	06007-55015		TIRE,550-15-8	ﾀｲﾔ	4	[TS W]
2	06711-55015		TUBE,550-15-8T	ﾁｭｰﾌﾞ	4	[TJ W][TJSW][T W][TS W]
3	06701-55015		FLAP,550-15-8F	ﾌﾗｯﾌﾟ	4	[TJ W][TJSW][T W][TS W]
A2	53657-42053		RIM-ASSY,450E-15	ﾘﾑｱｯｾﾝ	4	[TJ W][TJSW][T W][TS W] INC.4,5
4	NO PART NO.	#	RIM & DISK	ﾘﾑ & ﾃﾞｨｽｸ	4	[TJ W][TJSW][T W][TS W]
5	53457-42151		RING,SIDE	ﾘﾝｸﾞ	4	[TJ W][TJSW][T W][TS W]
6	06731-00120		TUBE,EXTENSION	ﾁｭｰﾌﾞ	2	[TJ W][TJSW][T W][TS W]

FIG.99 FRONT WHEEL [TUJW][TUSW][TUWW][TUGW]

(F60244C0) フロントホイール

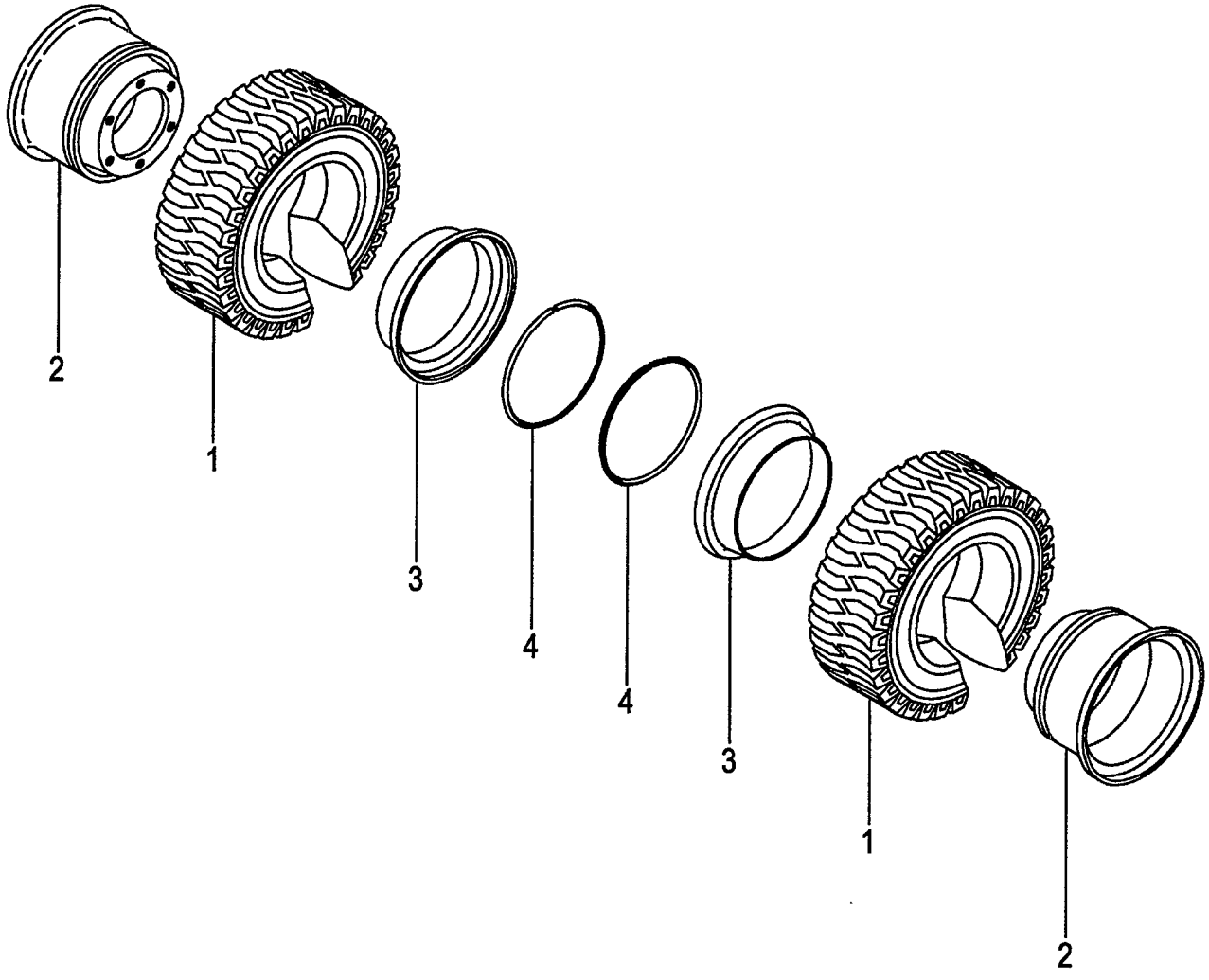

A:FD20C18 FD20T18 FD25C18 FD25T18
B:FD20C7 FD20T7 FD25C7 FD25T7 FD20W7 FD25W7

Item No	Part No.	Mark	Description		Req'd	Remarks : Serial No.
A1	52676-80802		WHEEL-ASSY,FRONT	ﾌﾛﾝﾄﾎｲｰﾙｱｯｾﾝ	4	[TUJW] INC.1-4
-	522A6-80321		WHEEL-ASSY,FRONT	ﾌﾛﾝﾄﾎｲｰﾙｱｯｾﾝ	4	[TUSW] INC.1-4
-	522A6-80301		WHEEL-ASSY,FRONT	ﾌﾛﾝﾄﾎｲｰﾙｱｯｾﾝ	4	[TUWW] INC.1-4
-	522A6-80311		WHEEL-ASSY,FRONT	ﾌﾛﾝﾄﾎｲｰﾙｱｯｾﾝ	4	[TUGW] INC.1-4
1	06806-55015		TIRE,UNIQUE,550-15	ﾀｲﾔ	4	[TUJW]
-	06851-55015		TIRE,SOFTONE,550-15	ﾀｲﾔ	4	[TUSW]
-	06841-55015		TIRE,WHITE,550-15	ﾀｲﾔ	4	[TUWW]
-	06843-55015		TIRE,GREEN,550-15	ﾀｲﾔ	4	[TUGW]
A2	53656-82001		RIM-ASSY,450E-15	ﾘﾑｱｯｾﾝ	4	[TUJW][TUSW][TUWW][TUGW] INC.2-4
2	NO PART NO.	#	RIM	ﾘﾑ	4	[TUJW][TUSW][TUWW][TUGW]
3	53456-82052		RING,SIDE	ﾘﾝｸﾞ	4	[TUJW][TUSW][TUWW][TUGW]
4	53456-82062		RING,LOCK	ﾘﾝｸﾞ	4	[TUJW][TUSW][TUWW][TUGW]

FIG.100 FRONT WHEEL [TJ W70][TJSW70][T W70][TS W70]

(F60244D0) フロントホイール

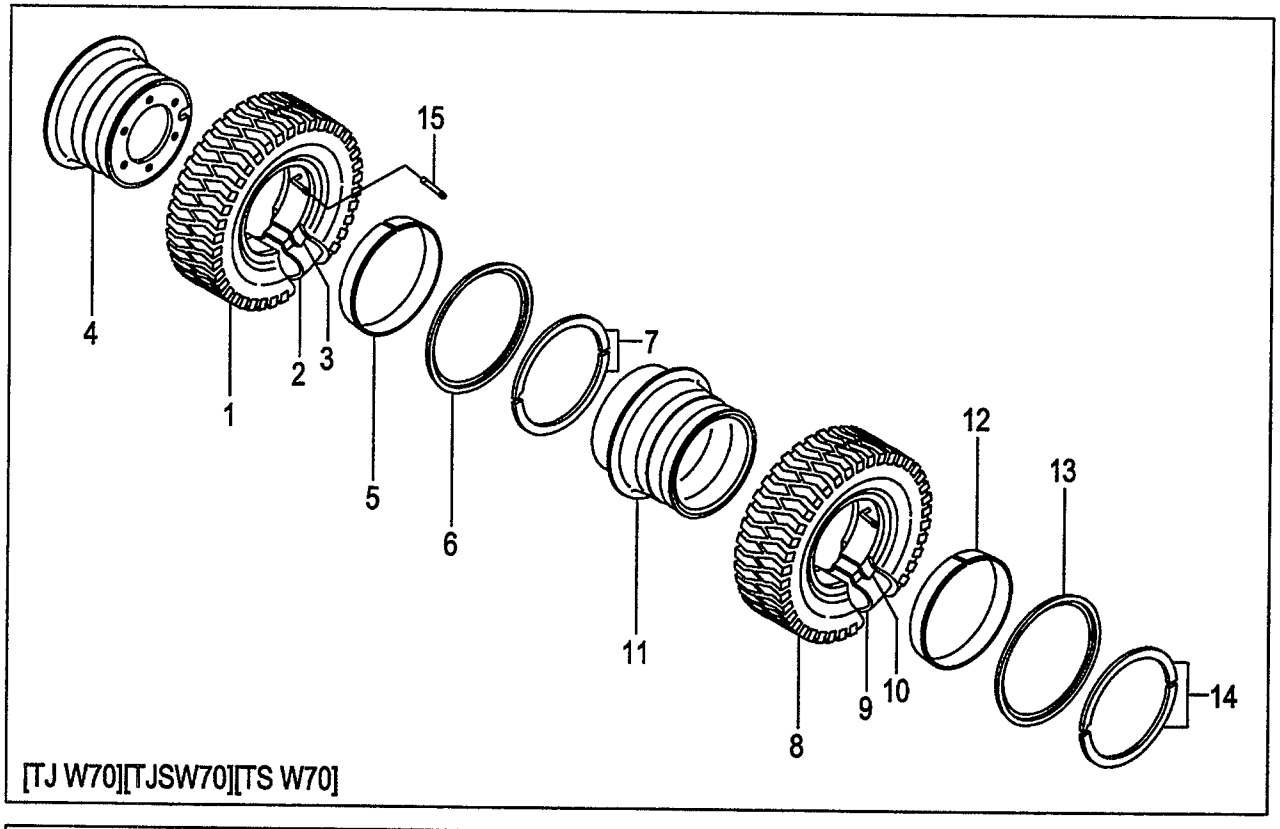

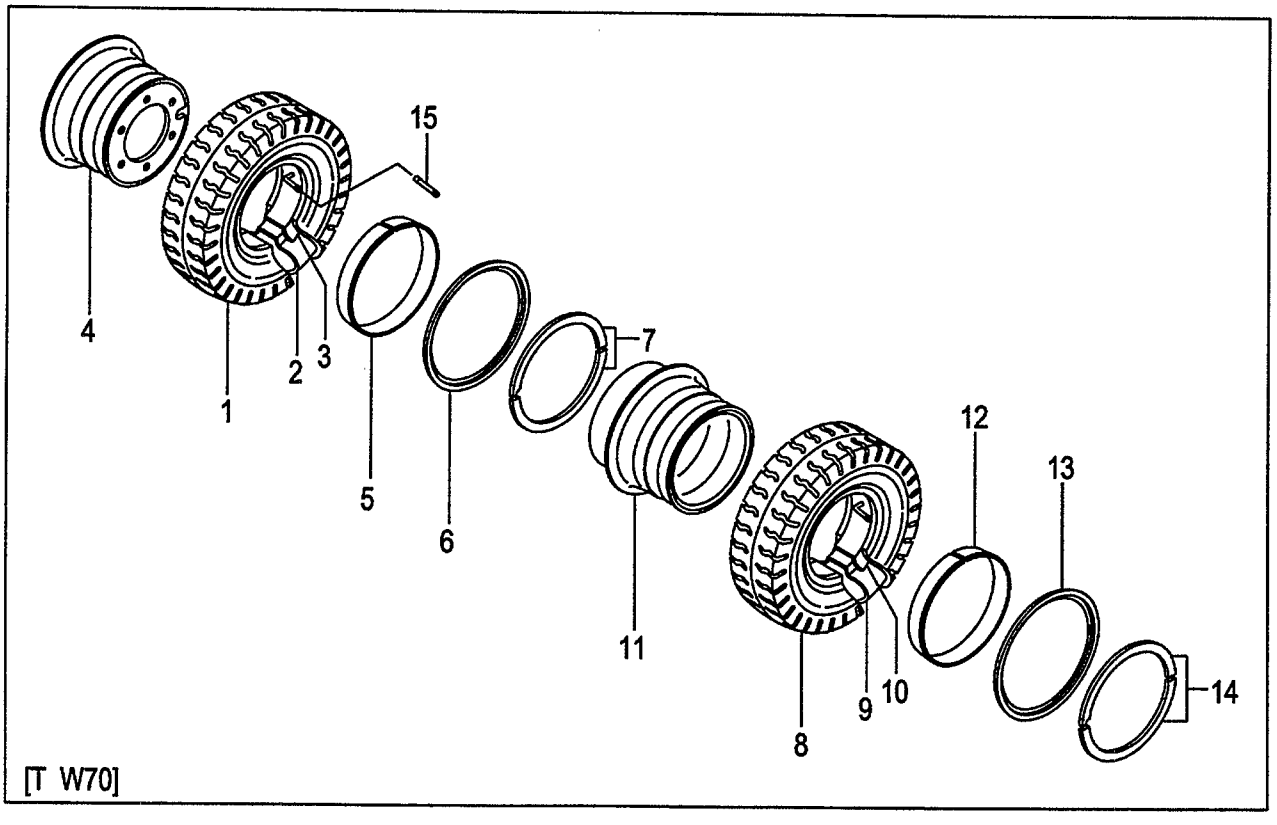

A:FD20C18 FD20T18 FD25C18 FD25T18
B:FD20C7 FD20T7 FD25C7 FD25T7 FD20W7 FD25W7

FIG.100
(F60244D0)

Item No	Part No.	Mark	Description		Req'd	Remarks : Serial No.
A1	53656-80601		WHEEL-ASSY,FRONT	ﾌﾛﾝﾄﾎｲｰﾙｱｯｾﾝ	2	[TJ W70] INC.1-7
-	53656-80501		WHEEL-ASSY,FRONT	ﾌﾛﾝﾄﾎｲｰﾙｱｯｾﾝ	2	[TJSW70] INC.1-7
-	53656-80201		WHEEL-ASSY,FRONT	ﾌﾛﾝﾄﾎｲｰﾙｱｯｾﾝ	2	[T W70] INC.1-7
-	53656-80701		WHEEL-ASSY,FRONT	ﾌﾛﾝﾄﾎｲｰﾙｱｯｾﾝ	2	[TS W70] INC.1-7
1	06006-70012		TIRE,700-12-12	ﾀｲﾔ	2	[TJ W70]
-	06005-70012		TIRE,700-12-12	ﾀｲﾔ	2	[TJSW70]
-	06001-70012		TIRE,700-12-12	ﾀｲﾔ	2	[T W70]
-	06007-70012		TIRE,700-12-12	ﾀｲﾔ	2	[TS W70]
2	06711-70012		TUBE,700-12-12T	ﾁｭｰﾌﾞ	2	[TJ W70][TJSW70][T W70] [TS W70]
3	06701-70012		FLAP,700-12-12F	ﾌﾗｯﾌﾟ	2	[TJ W70][TJSW70][T W70] [TS W70]
A2	53656-80901		RIM-ASSY,500S-12TD	ﾘﾑｱｯｾﾝ	2	[TJ W70][TJSW70][T W70] [TS W70] INC.4-7
4	NO PART NO.	#	RIM	ﾘﾑ	2	[TJ W70][TJSW70][T W70] [TS W70]
5	53656-82041		BAND	ﾊﾞﾝﾄﾞ	2	[TJ W70][TJSW70][T W70] [TS W70]
6	53656-82051		FLANGE,SIDE	ﾌﾗﾝｼﾞ	2	[TJ W70][TJSW70][T W70] [TS W70]
7	53656-82061		RING,LOCK	ﾘﾝｸﾞ	2	[TJ W70][TJSW70][T W70] [TS W70]
A3	53656-80611		WHEEL-ASSY,FRONT	ﾌﾛﾝﾄﾎｲｰﾙｱｯｾﾝ	2	[TJ W70] INC.8-14
-	53656-80511		WHEEL-ASSY,FRONT	ﾌﾛﾝﾄﾎｲｰﾙｱｯｾﾝ	2	[TJSW70] INC.8-14
-	53656-80211		WHEEL-ASSY,FRONT	ﾌﾛﾝﾄﾎｲｰﾙｱｯｾﾝ	2	[T W70] INC.8-14
-	53656-80711		WHEEL-ASSY,FRONT	ﾌﾛﾝﾄﾎｲｰﾙｱｯｾﾝ	2	[TS W70] INC.8-14
8	06006-70012		TIRE,700-12-12	ﾀｲﾔ	2	[TJ W70]
-	06005-70012		TIRE,700-12-12	ﾀｲﾔ	2	[TJSW70]
-	06001-70012		TIRE,700-12-12	ﾀｲﾔ	2	[T W70]
-	06007-70012		TIRE,700-12-12	ﾀｲﾔ	2	[TS W70]
9	06711-70012		TUBE,700-12-12T	ﾁｭｰﾌﾞ	2	[TJ W70][TJSW70][T W70] [TS W70]
10	06701-70012		FLAP,700-12-12F	ﾌﾗｯﾌﾟ	2	[TJ W70][TJSW70][T W70] [TS W70]
A4	53656-80911		RIM-ASSY,500S-12TD	ﾘﾑｱｯｾﾝ	2	[TJ W70][TJSW70][T W70] [TS W70] INC.11-14
11	NO PART NO.	#	RIM	ﾘﾑ	2	[TJ W70][TJSW70][T W70] [TS W70]
12	53656-82041		BAND	ﾊﾞﾝﾄﾞ	2	[TJ W70][TJSW70][T W70] [TS W70]
13	53656-82051		FLANGE,SIDE	ﾌﾗﾝｼﾞ	2	[TJ W70][TJSW70][T W70] [TS W70]
14	53656-82061		RING,LOCK	ﾘﾝｸﾞ	2	[TJ W70][TJSW70][T W70] [TS W70]
15	06731-00120		TUBE,EXTENSION	ﾁｭｰﾌﾞ	2	[TJ W70][TJSW70][T W70] [TS W70]

FIG.101 FRONT WHEEL [TUJW70][TUSW70][TUWW70][TUGW70]

(F60244E0) フロントホイール

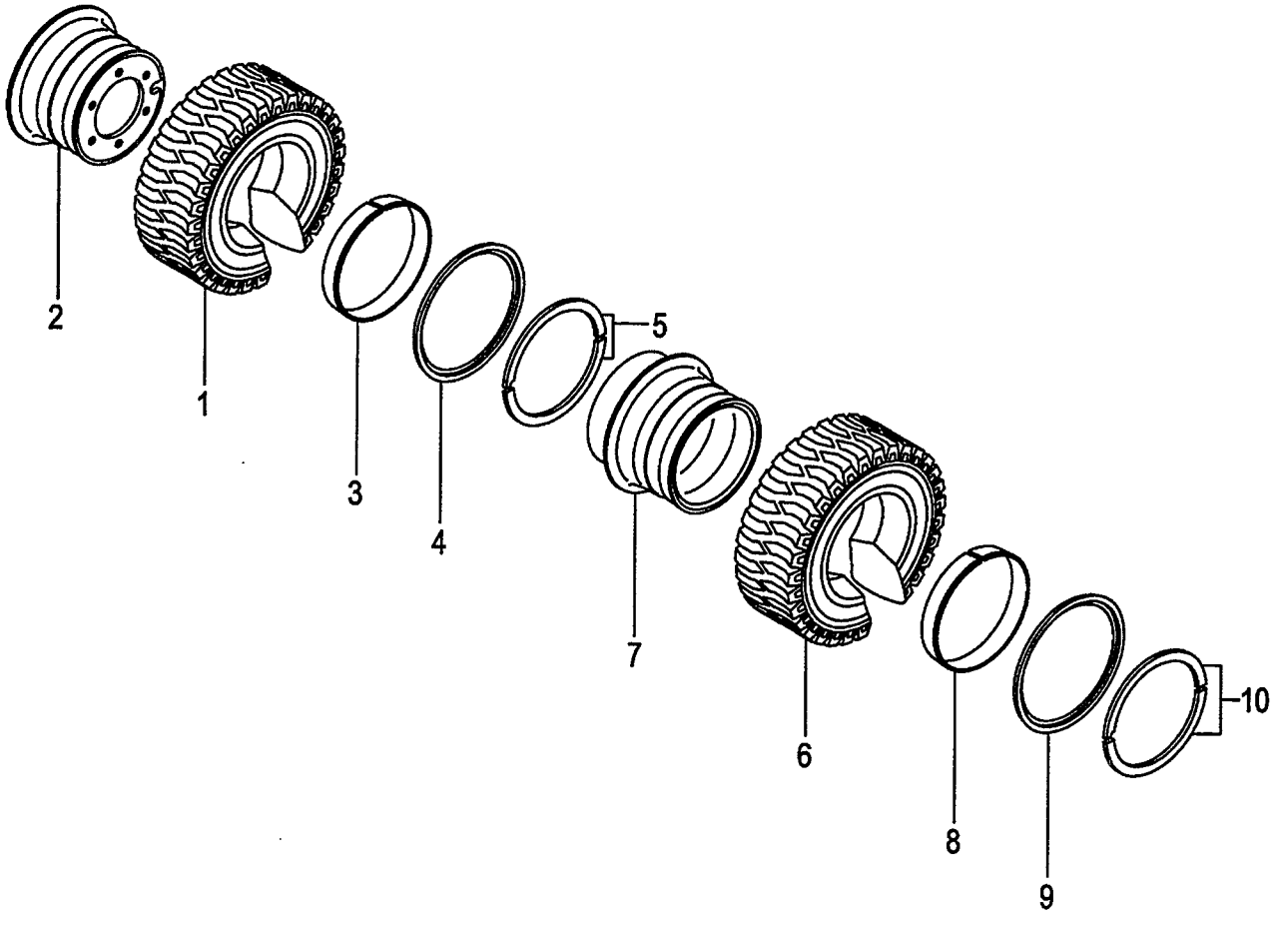

A:FD20C18 FD20T18 FD25C18 FD25T18
B:FD20C7 FD20T7 FD25C7 FD25T7 FD20W7 FD25W7

Item No	Part No.	Mark	Description		Req'd	Remarks : Serial No.
A1	53656-80401		WHEEL-ASSY,FRONT	ﾌﾛﾝﾄﾎｲｰﾙｱｯｾﾝ	2	[TUJW70] INC.1-5
-	522A6-80441		WHEEL-ASSY,FRONT	ﾌﾛﾝﾄﾎｲｰﾙｱｯｾﾝ	2	[TUSW70] INC.1-5
-	522A6-80401		WHEEL-ASSY,FRONT	ﾌﾛﾝﾄﾎｲｰﾙｱｯｾﾝ	2	[TUWW70] INC.1-5
-	522A6-80421		WHEEL-ASSY,FRONT	ﾌﾛﾝﾄﾎｲｰﾙｱｯｾﾝ	2	[TUGW70] INC.1-5
1	06806-70012		TIRE,UNIQUE,700-12	ﾀｲﾔ	2	[TUJW70]
-	06851-70012		TIRE,SOFTONE,700-12	ﾀｲﾔ	2	[TUSW70]
-	06841-70012		TIRE,WHITE,700-12	ﾀｲﾔ	2	[TUWW70]
-	06843-70012		TIRE,GREEN,700-12	ﾀｲﾔ	2	[TUGW70]
A2	53656-80901		RIM-ASSY,500S-12TD	ﾘﾑｱｯｾﾝ	2	[TUJW70][TUSW70][TUWW70] [TUGW70] INC.2-5
2	NO PART NO.	#	RIM	ﾘﾑ	2	[TUJW70][TUSW70][TUWW70] [TUGW70]
3	53656-82041		BAND	ﾊﾞﾝﾄﾞ	2	[TUJW70][TUSW70][TUWW70] [TUGW70]
4	53656-82051		FLANGE,SIDE	ﾌﾗﾝｼﾞ	2	[TUJW70][TUSW70][TUWW70] [TUGW70]
5	53656-82061		RING,LOCK	ﾘﾝｸﾞ	2	[TUJW70][TUSW70][TUWW70] [TUGW70]
A3	53656-80411		WHEEL-ASSY,FRONT	ﾌﾛﾝﾄﾎｲｰﾙｱｯｾﾝ	2	[TUJW70] INC.6-10
-	522A6-80451		WHEEL-ASSY,FRONT	ﾌﾛﾝﾄﾎｲｰﾙｱｯｾﾝ	2	[TUSW70] INC.6-10
-	522A6-80411		WHEEL-ASSY,FRONT	ﾌﾛﾝﾄﾎｲｰﾙｱｯｾﾝ	2	[TUWW70] INC.6-10
-	522A6-80431		WHEEL-ASSY,FRONT	ﾌﾛﾝﾄﾎｲｰﾙｱｯｾﾝ	2	[TUGW70] INC.6-10
6	06806-70012		TIRE,UNIQUE,700-12	ﾀｲﾔ	2	[TUJW70]
-	06851-70012		TIRE,SOFTONE,700-12	ﾀｲﾔ	2	[TUSW70]
-	06841-70012		TIRE,WHITE,700-12	ﾀｲﾔ	2	[TUWW70]
-	06843-70012		TIRE,GREEN,700-12	ﾀｲﾔ	2	[TUGW70]
A4	53656-80911		RIM-ASSY,500S-12TD	ﾘﾑｱｯｾﾝ	2	[TUJW70][TUSW70][TUWW70] [TUGW70] INC.7-10
7	NO PART NO.	#	RIM	ﾘﾑ	2	[TUJW70][TUSW70][TUWW70] [TUGW70]
8	53656-82041		BAND	ﾊﾞﾝﾄﾞ	2	[TUJW70][TUSW70][TUWW70] [TUGW70]
9	53656-82051		FLANGE,SIDE	ﾌﾗﾝｼﾞ	2	[TUJW70][TUSW70][TUWW70] [TUGW70]
10	53656-82061		RING,LOCK	ﾘﾝｸﾞ	2	[TUJW70][TUSW70][TUWW70] [TUGW70]

FIG.102 REAR WHEEL
(F60244F0) リヤーホイール

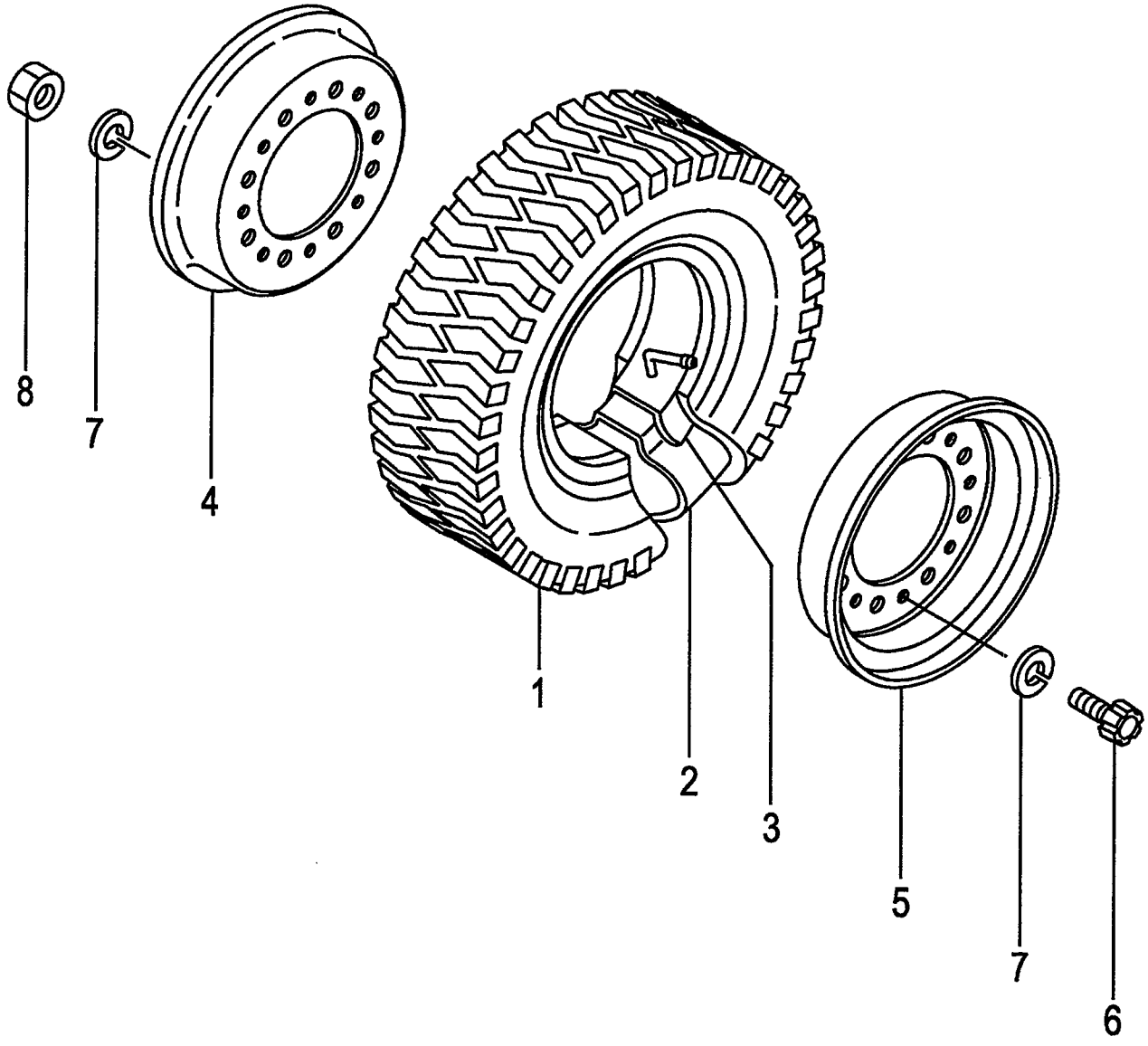

A:FD20C18 FD20T18 FD25C18 FD25T18
B:FD20C7 FD20T7 FD25C7 FD25T7 FD20W7 FD25W7

FIG.102
(F60244F0)

Item No	Part No.	Mark	Description		Req'd	Remarks : Serial No.
A1	53656-81501		WHEEL-ASSY,REAR	リアホイールアッセン	2	INC.1-8
1	06006-60009		TIRE,600-9-10	タイヤ	2	
2	06712-60009		TUBE,600-9-10T	チューブ	2	
3	06702-60009		FLAP,600-9-10F	フラップ	2	
A2	23654-40501		RIM-ASSY,400E-9	リムアッセン	2	INC.4-8
4	NO PART NO.	#	RIM,INSIDE	リム	2	
5	NO PART NO.	#	RIM,OUTSIDE	リム	2	
6	534F3-82001		BOLT	ボルト	16	
7	02011-00012		WASHER	ワッシャ	32	
8	01400-00012		NUT	ナット	16	

FIG.103 REAR WHEEL [DR R]

(F60244G0) リヤーホイール

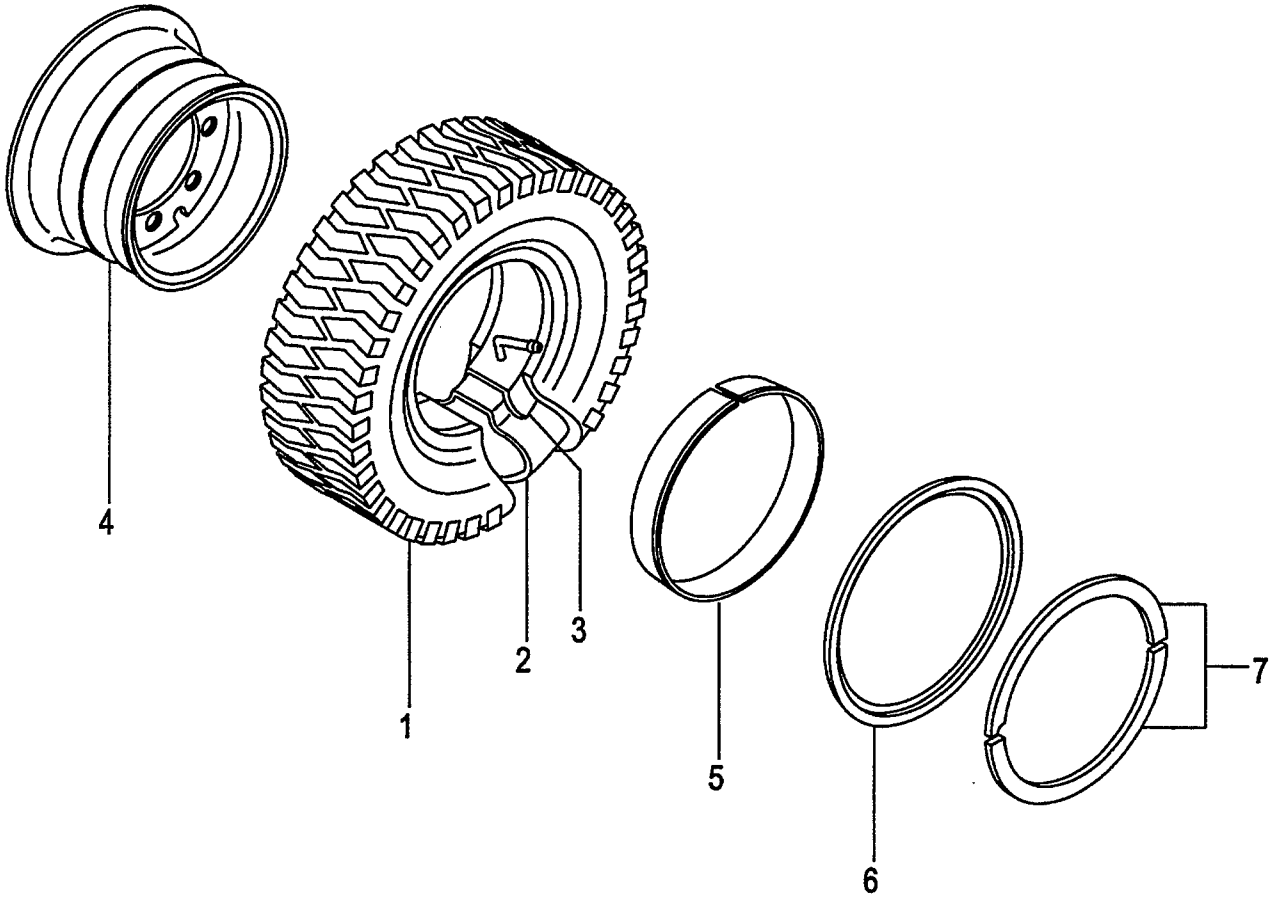

A:FD20C18 FD20T18 FD25C18 FD25T18
B:FD20C7 FD20T7 FD25C7 FD25T7 FD20W7 FD25W7

FIG.103
(F60244G0)

Item No	Part No.	Mark	Description		Req'd	Remarks : Serial No.
A1	53666-81501		WHEEL-ASSY,REAR	ﾘｱﾎｲｰﾙｱｯｾﾝ	2	[DR R] INC.1-7
1	06006-60009		TIRE,600-9-10	ﾀｲﾔ	2	[DR R]
2	06712-60009		TUBE,600-9-10T	ﾁｭｰﾌﾞ	2	[DR R]
3	06702-60009		FLAP,600-9-10F	ﾌﾗｯﾌﾟ	2	[DR R]
A2	53666-81901		RIM-ASSY,400E-9	ﾘﾑｱｯｾﾝ	2	[DR R] INC.4-7
4	NO PART NO.	#	RIM	ﾘﾑ	2	[DR R]
5	53666-82021		BAND	ﾊﾞﾝﾄﾞ	2	[DR R]
6	53666-82031		FLANGE,SIDE	ﾌﾗﾝｼﾞ	2	[DR R]
7	53666-82041		RING,LOCK	ﾘﾝｸﾞ	2	[DR R]

FIG.104 REAR WHEEL [TJ R][TJSR][T R][TS R]

(F60244H0) リヤーホイール

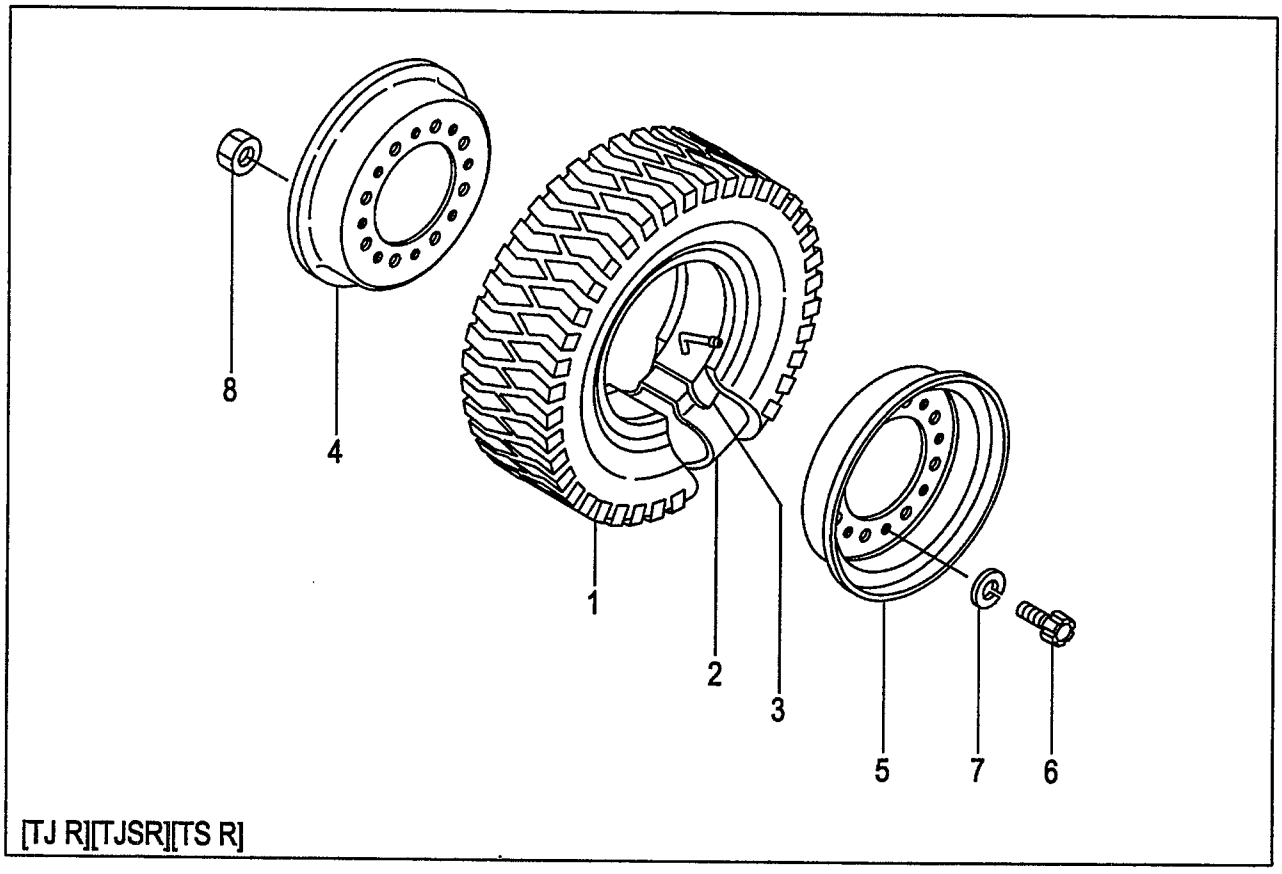

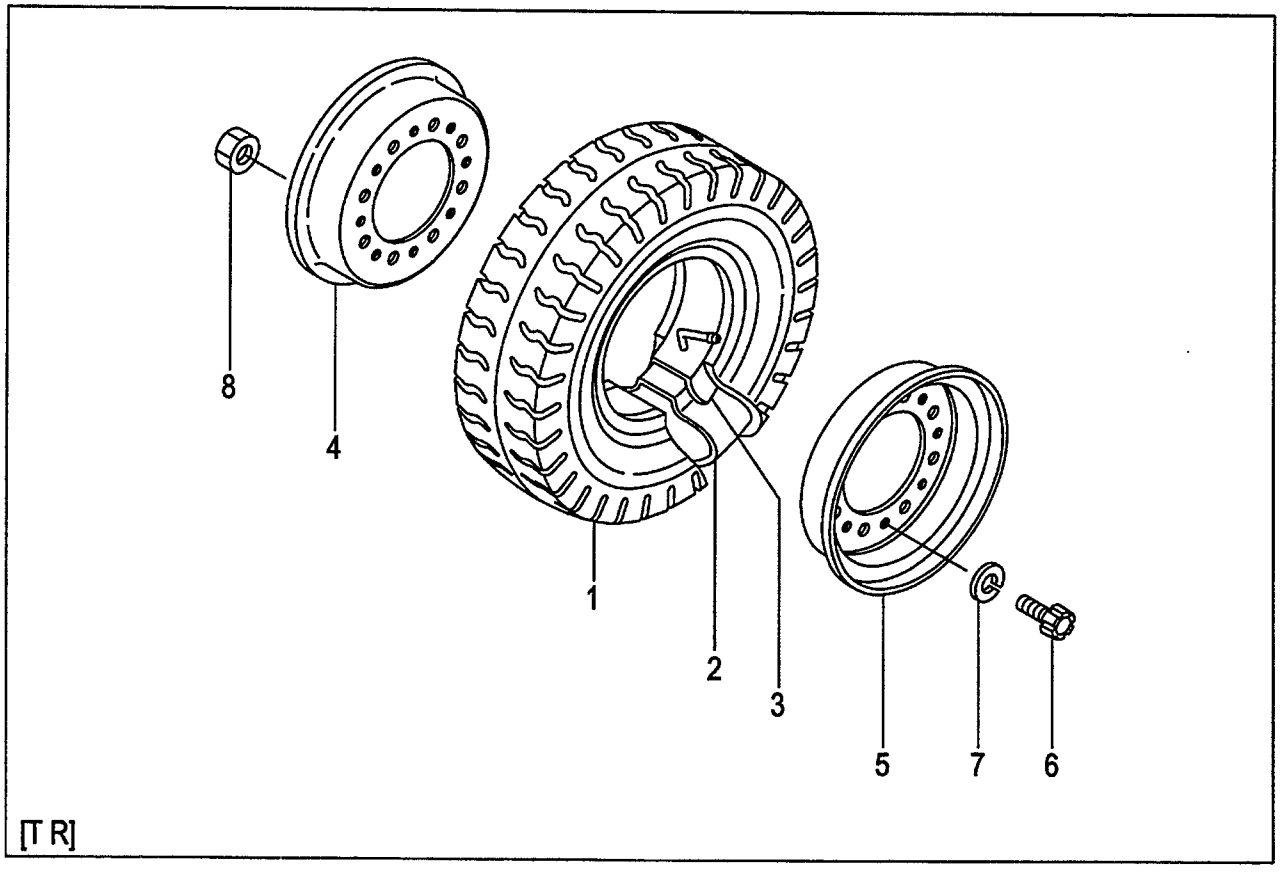

A:FD20C18 FD20T18 FD25C18 FD25T18
B:FD20C7 FD20T7 FD25C7 FD25T7 FD20W7 FD25W7

FIG.104
(F60244H0)

Item No	Part No.	Mark	Description		Req'd	Remarks : Serial No.
A1	53656-81501		WHEEL-ASSY,REAR	ﾘｱﾎｲｰﾙｱｯｾﾝ	2	[TJ R] INC.1-8
-	53656-81401		WHEEL-ASSY,REAR	ﾘｱﾎｲｰﾙｱｯｾﾝ	2	[TJSR] INC.1-8
-	23654-40511		WHEEL-ASSY,REAR	ﾘｱﾎｲｰﾙｱｯｾﾝ	2	[T R] INC.1-8
-	53656-81601		WHEEL-ASSY,REAR	ﾘｱﾎｲｰﾙｱｯｾﾝ	2	[TS R] INC.1-8
1	06006-60009		TIRE,600-9-10	ﾀｲﾔ	2	[TJ R]
-	06005-60009		TIRE,600-9-10	ﾀｲﾔ	2	[TJSR]
-	06001-60009		TIRE,600-9-10	ﾀｲﾔ	2	[T R]
-	06007-60009		TIRE,600-9-10	ﾀｲﾔ	2	[TS R]
2	06712-60009		TUBE,600-9-10T	ﾁｭｰﾌﾞ	2	[TJ R][TJSR][T R][TS R]
3	06702-60009		FLAP,600-9-10F	ﾌﾗｯﾌﾟ	2	[TJ R][TJSR][T R][TS R]
A2	23654-40501		RIM-ASSY,400E-9	ﾘﾑｱｯｾﾝ	2	[TJ R][TJSR][T R][TS R] INC.4-8
4	NO PART NO.	#	RIM,INSIDE	ﾘﾑ	2	[TJ R][TJSR][T R][TS R]
5	NO PART NO.	#	RIM,OUTSIDE	ﾘﾑ	2	[TJ R][TJSR][T R][TS R]
6	534F3-82001		BOLT	ﾎﾞﾙﾄ	16	[TJ R][TJSR][T R][TS R]
7	02011-00012		WASHER	ﾜｯｼｬ	32	[TJ R][TJSR][T R][TS R]
8	01400-00012		NUT	ﾅｯﾄ	16	[TJ R][TJSR][T R][TS R]

FIG.105 REAR WHEEL [(TJ R,TJSR,T R,TS R)/DR R]

(F60244J0) リヤーホイール

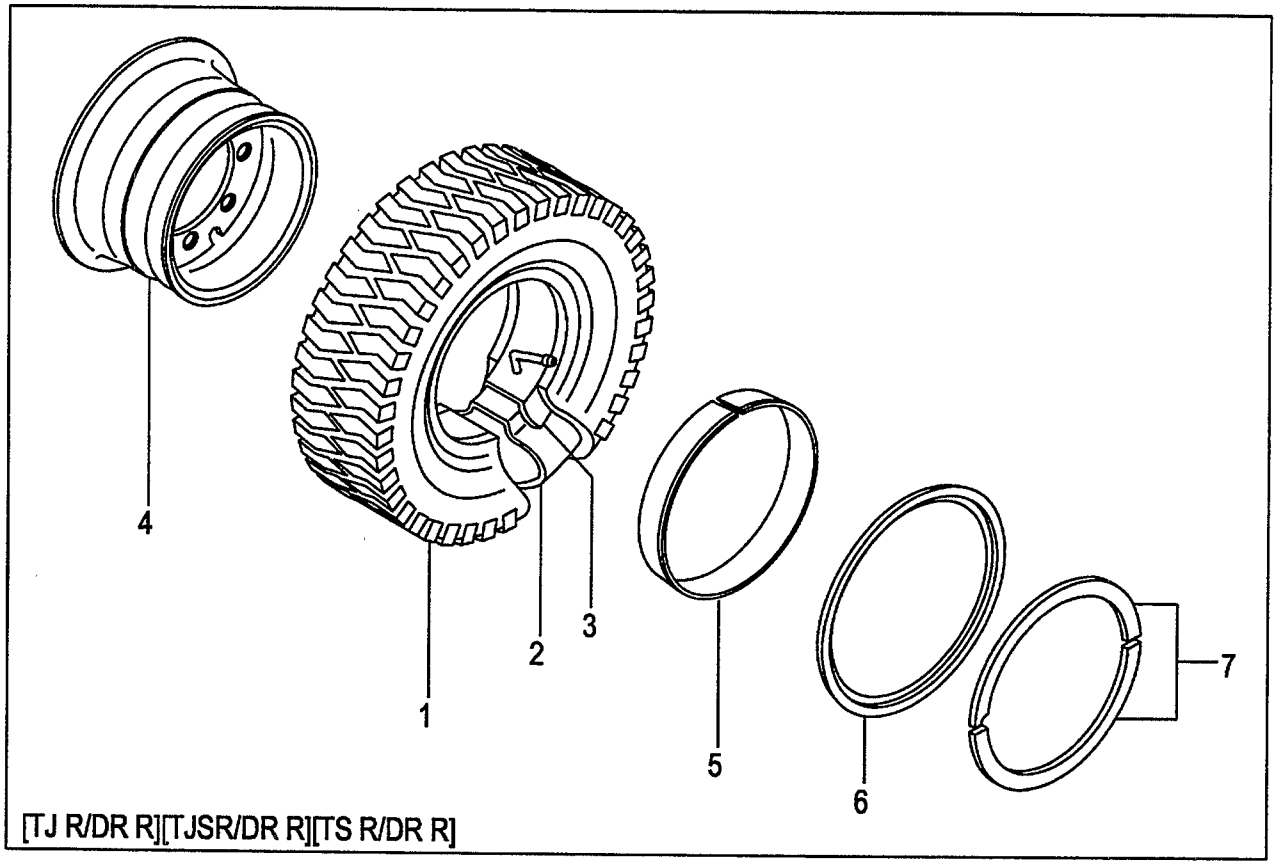

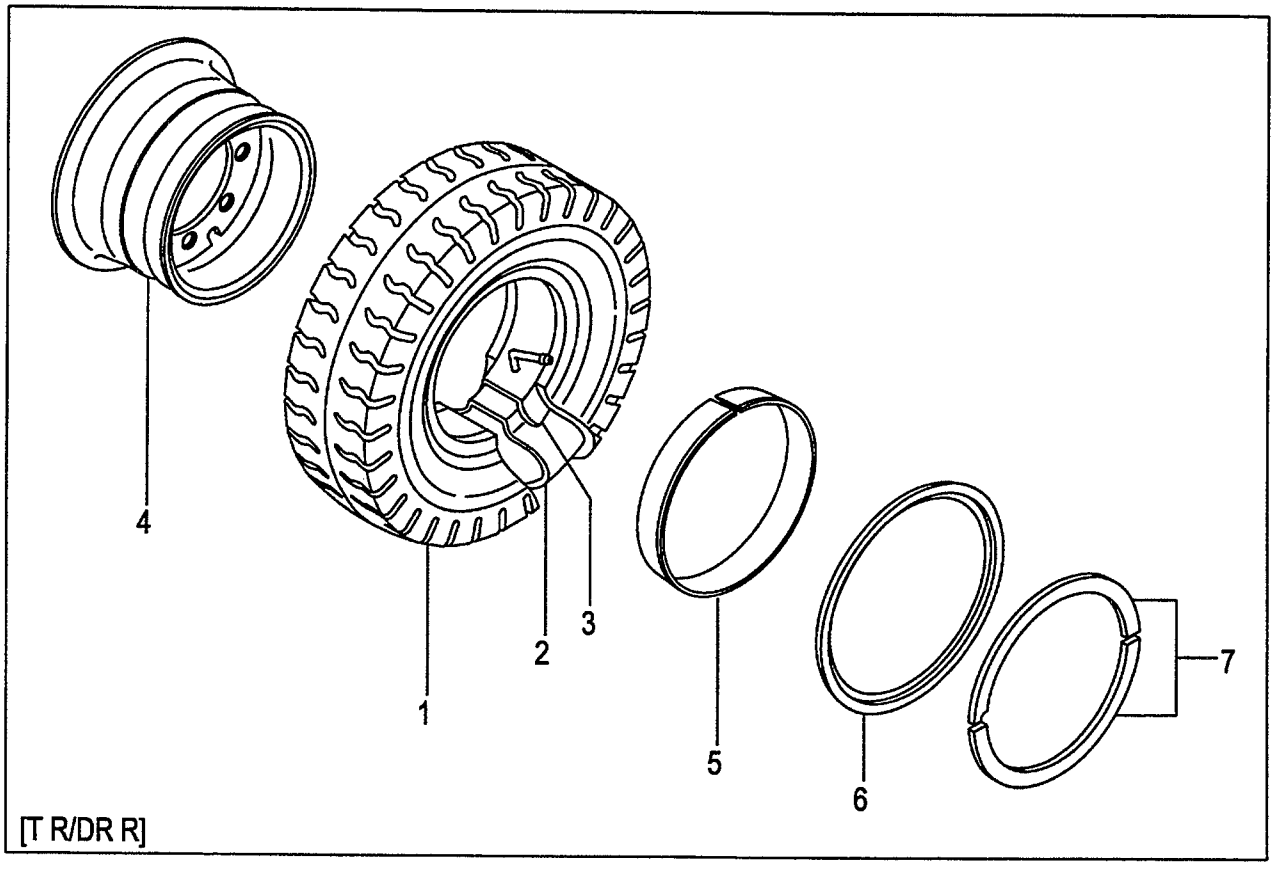

A:FD20C18 FD20T18 FD25C18 FD25T18
B:FD20C7 FD20T7 FD25C7 FD25T7 FD20W7 FD25W7

Item No	Part No.	Mark	Description		Req'd	Remarks : Serial No.
A1	53666-81501		WHEEL-ASSY,REAR	ﾘｱﾎｲｰﾙｱｯｾﾝ	2	[TJ R/DR R] INC.1-7
-	53666-81401		WHEEL-ASSY,REAR	ﾘｱﾎｲｰﾙｱｯｾﾝ	2	[TJSR/DR R] INC.1-7
-	53666-80901		WHEEL-ASSY,REAR	ﾘｱﾎｲｰﾙｱｯｾﾝ	2	[T R/DR R] INC.1-7
-	53666-81601		WHEEL-ASSY,REAR	ﾘｱﾎｲｰﾙｱｯｾﾝ	2	[TS R/DR R] INC.1-7
1	06006-60009		TIRE,600-9-10	ﾀｲﾔ	2	[TJ R/DR R]
-	06005-60009		TIRE,600-9-10	ﾀｲﾔ	2	[TJSR/DR R]
-	06001-60009		TIRE,600-9-10	ﾀｲﾔ	2	[T R/DR R]
-	06007-60009		TIRE,600-9-10	ﾀｲﾔ	2	[TS R/DR R]
2	06712-60009		TUBE,600-9-10T	ﾁｭｰﾌﾞ	2	[TJ R/DR R][TJSR/DR R]
						[T R/DR R][TS R/DR R]
3	06702-60009		FLAP,600-9-10F	ﾌﾗｯﾌﾟ	2	[TJ R/DR R][TJSR/DR R]
						[T R/DR R][TS R/DR R]
A2	53666-81901		RIM-ASSY,400E-9	ﾘﾑｱｯｾﾝ	2	[TJ R/DR R][TJSR/DR R] INC.4-7
-	53666-81901		RIM-ASSY,400E-9	ﾘﾑｱｯｾﾝ	2	[T R/DR R][TS R/DR R] INC.4-7
4	NO PART NO.	#	RIM	ﾘﾑ	2	[TJ R/DR R][TJSR/DR R]
						[T R/DR R][TS R/DR R]
5	53666-82021		BAND	ﾊﾞﾝﾄﾞ	2	[TJ R/DR R][TJSR/DR R]
						[T R/DR R][TS R/DR R]
6	53666-82031		FLANGE,SIDE	ﾌﾗﾝｼﾞ	2	[TJ R/DR R][TJSR/DR R]
						[T R/DR R][TS R/DR R]
7	53666-82041		RING,LOCK	ﾘﾝｸﾞ	2	[TJ R/DR R][TJSR/DR R]
						[T R/DR R][TS R/DR R]

FIG.106 REAR WHEEL [TUJR][TUSR][TUWR][TUGR]

(F60244K0) リヤーホイール

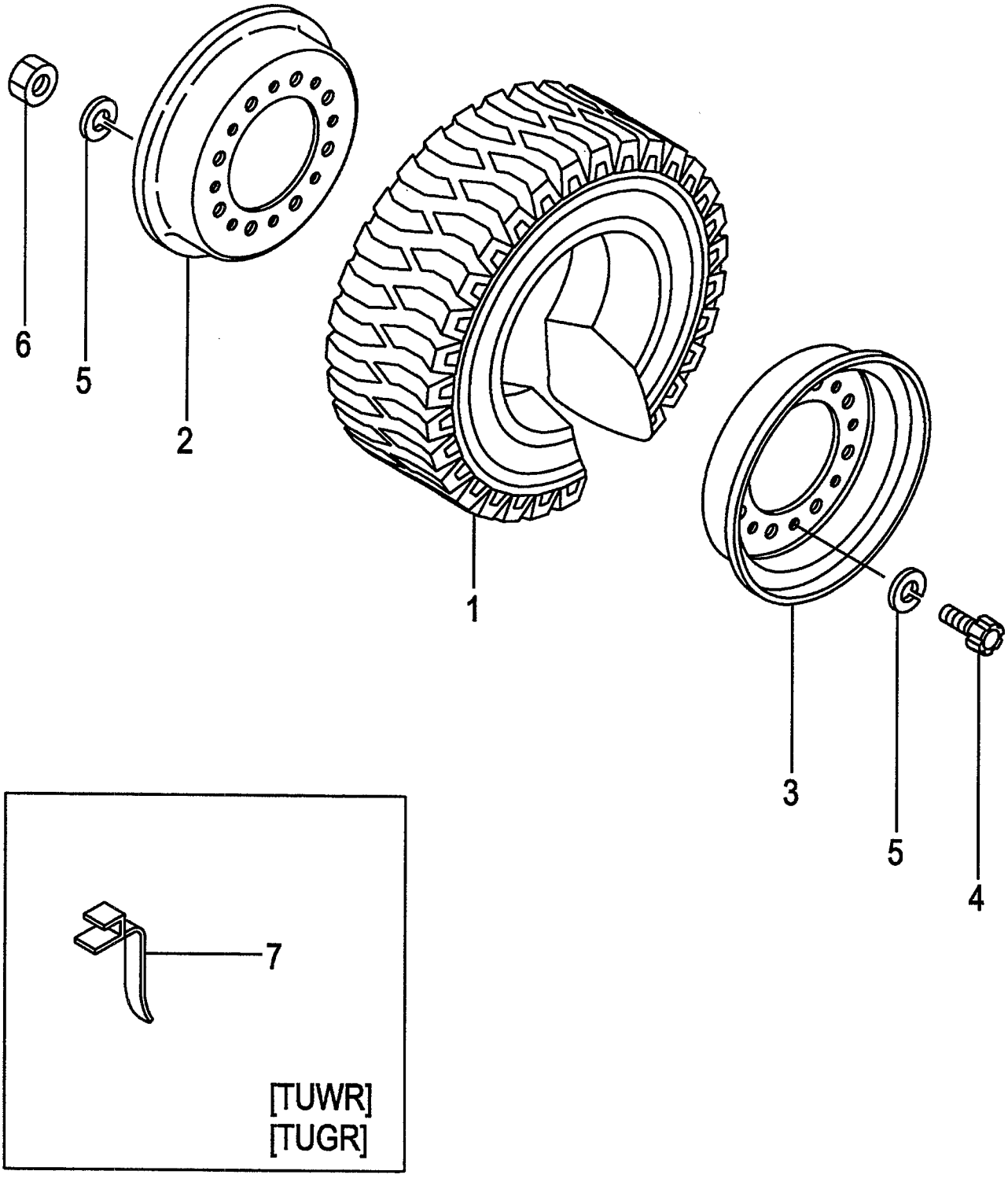

A:FD20C18 FD20T18 FD25C18 FD25T18
B:FD20C7 FD20T7 FD25C7 FD25T7
C:FD20W7 FD25W7

FIG.106
(F60244K0)

Item No	Part No.	Mark	Description		Req'd	Remarks : Serial No.
A1	53656-81301		WHEEL-ASSY,REAR	ﾘｱﾎｲｰﾙｱｯｾﾝ	2	[TUJR] INC.1-6
-	53656-81301		WHEEL-ASSY,REAR	ﾘｱﾎｲｰﾙｱｯｾﾝ	2	[TUJR] INC.1-6
-	522A3-80451		WHEEL-ASSY,REAR	ﾘｱﾎｲｰﾙｱｯｾﾝ	2	[TUJR] INC.1-6
-	522A3-80451		WHEEL-ASSY,REAR	ﾘｱﾎｲｰﾙｱｯｾﾝ	2	B [TUJR/EX] INC.1-6
-	522A6-80521		WHEEL-ASSY,REAR	ﾘｱﾎｲｰﾙｱｯｾﾝ	2	[TUSR] INC.1-6
-	522A6-80501		WHEEL-ASSY,REAR	ﾘｱﾎｲｰﾙｱｯｾﾝ	2	[TUWR] INC.1-6
-	522A6-80511		WHEEL-ASSY,REAR	ﾘｱﾎｲｰﾙｱｯｾﾝ	2	[TUGR] INC.1-6
1	06806-60009		TIRE,UNIQUE,600-9	ﾀｲﾔ	2	[TUJR]
-	06806-60009		TIRE,UNIQUE,600-9	ﾀｲﾔ	2	[TUJR]
-	06807-60009		TIRE,UNIQUE,600-9	ﾀｲﾔ	2	[TUJR]
-	06807-60009		TIRE,UNIQUE,600-9	ﾀｲﾔ	2	B [TUJR/EX]
-	06851-60009		TIRE,SOFTONE,600-9	ﾀｲﾔ	2	[TUSR]
-	06841-60009		TIRE,WHITE,600-9	ﾀｲﾔ	2	[TUWR]
-	06843-60009		TIRE,GREEN,600-9	ﾀｲﾔ	2	[TUGR]
A2	23654-40501		RIM-ASSY,400E-9	ﾘﾑｱｯｾﾝ	2	[TUJR][TUSR][TUWR][TUGR] INC.2-6
2	NO PART NO.	#	RIM,INSIDE	ﾘﾑ	2	[TUJR][TUSR][TUWR][TUGR]
3	NO PART NO.	#	RIM,OUTSIDE	ﾘﾑ	2	[TUJR][TUSR][TUWR][TUGR]
4	534F3-82001		BOLT	ﾎﾞﾙﾄ	16	[TUJR][TUSR][TUWR][TUGR]
5	02011-00012		WASHER	ﾜｯｼｬ	32	[TUJR][TUSR][TUWR][TUGR]
6	01400-00012		NUT	ﾅｯﾄ	16	[TUJR][TUSR][TUWR][TUGR]
7	571A6-82081		BELT,EARTH	ﾍﾞﾙﾄ	1	[TUWR][TUGR]

FIG.107 REAR WHEEL [TUJR/DR R]

(F60244L0) リヤーホイール

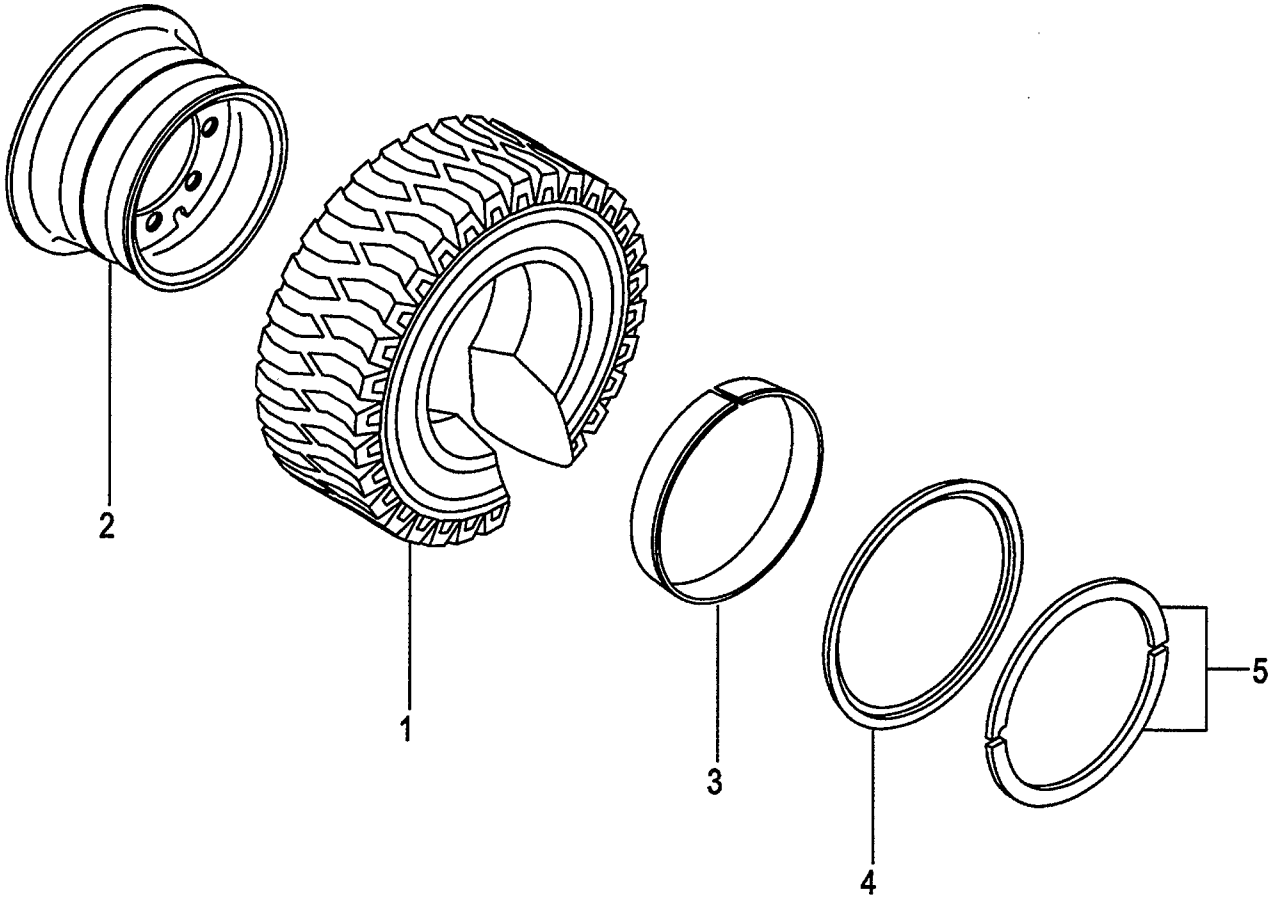

A:FD20C18 FD20T18 FD25C18 FD25T18
B:FD20C7 FD20T7 FD25C7 FD25T7 FD20W7 FD25W7

Item No	Part No.	Mark	Description		Req'd	Remarks : Serial No.
A1	53666-81301		WHEEL-ASSY,REAR	ﾘｱﾎｲｰﾙｱｯｾﾝ	2	[TUJR/DR R] INC.1-5
1	06806-60009		TIRE,UNIQUE,600-9	ﾀｲﾔ	2	[TUJR/DR R]
A2	53666-81901		RIM-ASSY,400E-9	ﾘﾑｱｯｾﾝ	2	[TUJR/DR R] INC.2-5
2	NO PART NO.	#	RIM	ﾘﾑ	2	[TUJR/DR R]
3	53666-82021		BAND	ﾊﾞﾝﾄﾞ	2	[TUJR/DR R]
4	53666-82031		FLANGE,SIDE	ﾌﾗﾝｼﾞ	2	[TUJR/DR R]
5	53666-82041		RING,LOCK	ﾘﾝｸﾞ	2	[TUJR/DR R]

FIG.108 REAR WHEEL [TRAR]

(F60244M0) リヤーホイール

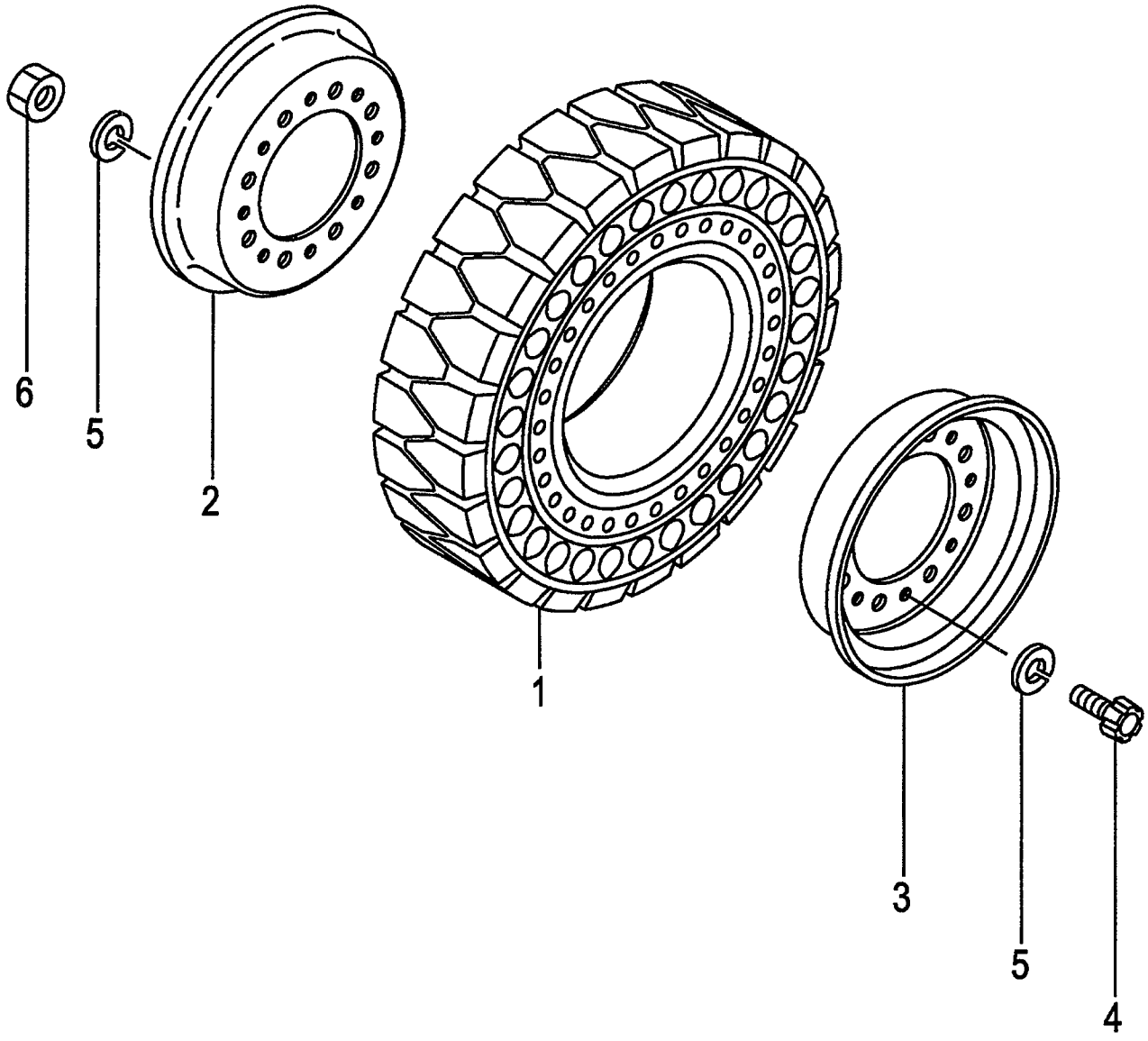

A:FD20C18 FD20T18 FD25C18 FD25T18
B:FD20C7 FD20T7 FD25C7 FD25T7 FD20W7 FD25W7

FIG.108
(F60244M0)

Item No	Part No.	Mark	Description		Req'd	Remarks : Serial No.
A1	534A6-80271		WHEEL-ASSY,REAR	リアホイールアッセン	2	[TRAR] INC.1-6
1	534A6-85001		TIRE,AIR-BOSS,600-9	タイヤ	2	[TRAR]
A2	23654-40501		RIM-ASSY,400E-9	リムアッセン	2	[TRAR] INC.2-6
2	NO PART NO.	#	RIM,INSIDE	リム	2	[TRAR]
3	NO PART NO.	#	RIM,OUTSIDE	リム	2	[TRAR]
4	534F3-82001		BOLT	ボルト	16	[TRAR]
5	02011-00012		WASHER	ワッシャ	32	[TRAR]
6	01400-00012		NUT	ナット	16	[TRAR]

FIG.109 POWER CYLINDER

(F6024510) ﾊﾟﾜｰｼﾘﾝﾀﾞ

KIT
K1 901

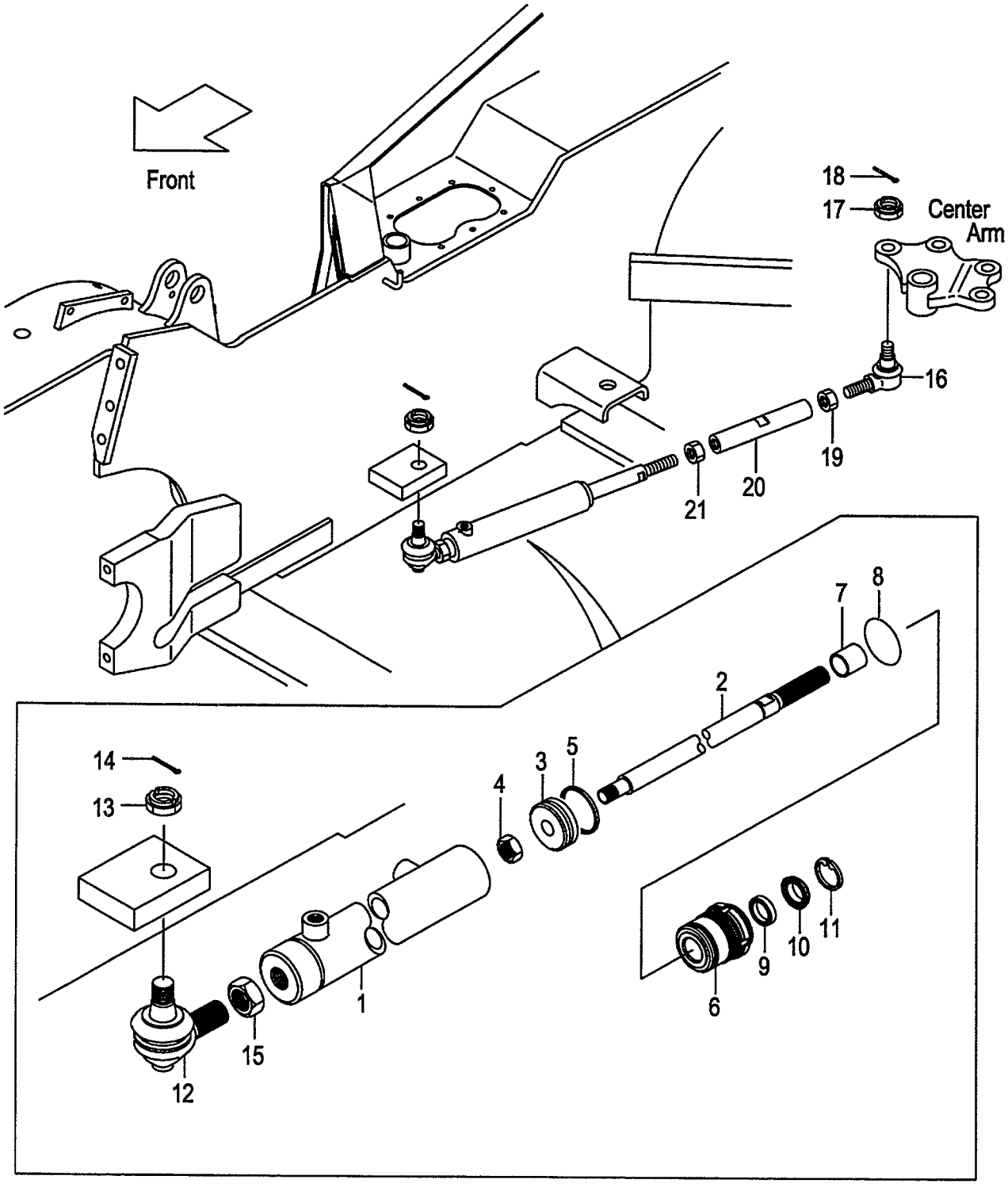

A:FD20C18 FD20T18 FD25C18 FD25T18
B:FD20C7 FD20T7 FD25C7 FD25T7 FD20W7 FD25W7

Item No	Part No.	Mark	Description		Req'd	Remarks : Serial No.
A1	238G4-50201		CYL-ASSY,PS	ﾊﾟﾜｽﾃｼﾘﾝﾀﾞｱｯｾﾝ	1	INC.1-15
901	214A4-59802	K1	KIT,REPAIR	ﾘﾍﾟｱｷｯﾄ	1	INC.5,8-11
1	238G4-50211		TUBE,CYL	ﾁｭｰﾌﾞ	1	
2	214A4-52041		ROD,PISTON	ﾛｯﾄﾞ	1	
3	214A4-52031		PISTON	ﾋﾟｽﾄﾝ	1	
4	01402-10018		NUT	ﾅｯﾄ	1	
5	25594-52362	*	SEAL,SLIPPER	ｼｰﾙ	1	
6	214A4-52021		CAP,CYL	ｷｬｯﾌﾟ	1	
7	25954-52061		BUSHING	ﾌﾞｯｼﾝｸﾞ	1	
8	03350-00450	*	O-RING	Oﾘﾝｸﾞ	1	
9	25954-52071	*	PACKING	ﾊﾟｯｷﾝｸﾞ	1	
10	25954-52081	*	SEAL,DUST	ｼｰﾙ	1	
11	25954-52091	*	RING,SNAP	ｽﾅｯﾌﾟﾘﾝｸﾞ	1	
A2	24234-30551		END-ASSY,ROD,RH	ｴﾝﾄﾞｱｯｾﾝ	1	INC.12-14
12	NO PART NO.	#	END,ROD,RH	ｴﾝﾄﾞ	1	
13	01412-10016		NUT,CASTLE	ﾅｯﾄ	1	
14	02200-32032		PIN,COTTER	ﾋﾟﾝ	1	
15	01402-00022		NUT	ﾅｯﾄ	1	
A3	24234-30561		END-ASSY,ROD,LH	ｴﾝﾄﾞｱｯｾﾝ	1	INC.16-18
16	NO PART NO.	#	END,ROD,LH	ｴﾝﾄﾞ	1	
17	01412-10016		NUT,CASTLE	ﾅｯﾄ	1	
18	02200-32032		PIN,COTTER	ﾋﾟﾝ	1	
19	01407-00022		NUT,LH	ﾅｯﾄ	1	
20	238G4-52201		ROD,CONNECTING	ﾛｯﾄﾞ	1	
21	01402-00024		NUT	ﾅｯﾄ	1	

FIG.110 POWER CYLINDER [EXC][EXE][EXK][EXN][OBT]

(F6024520) ﾊﾟﾜｰｼﾘﾝﾀﾞ

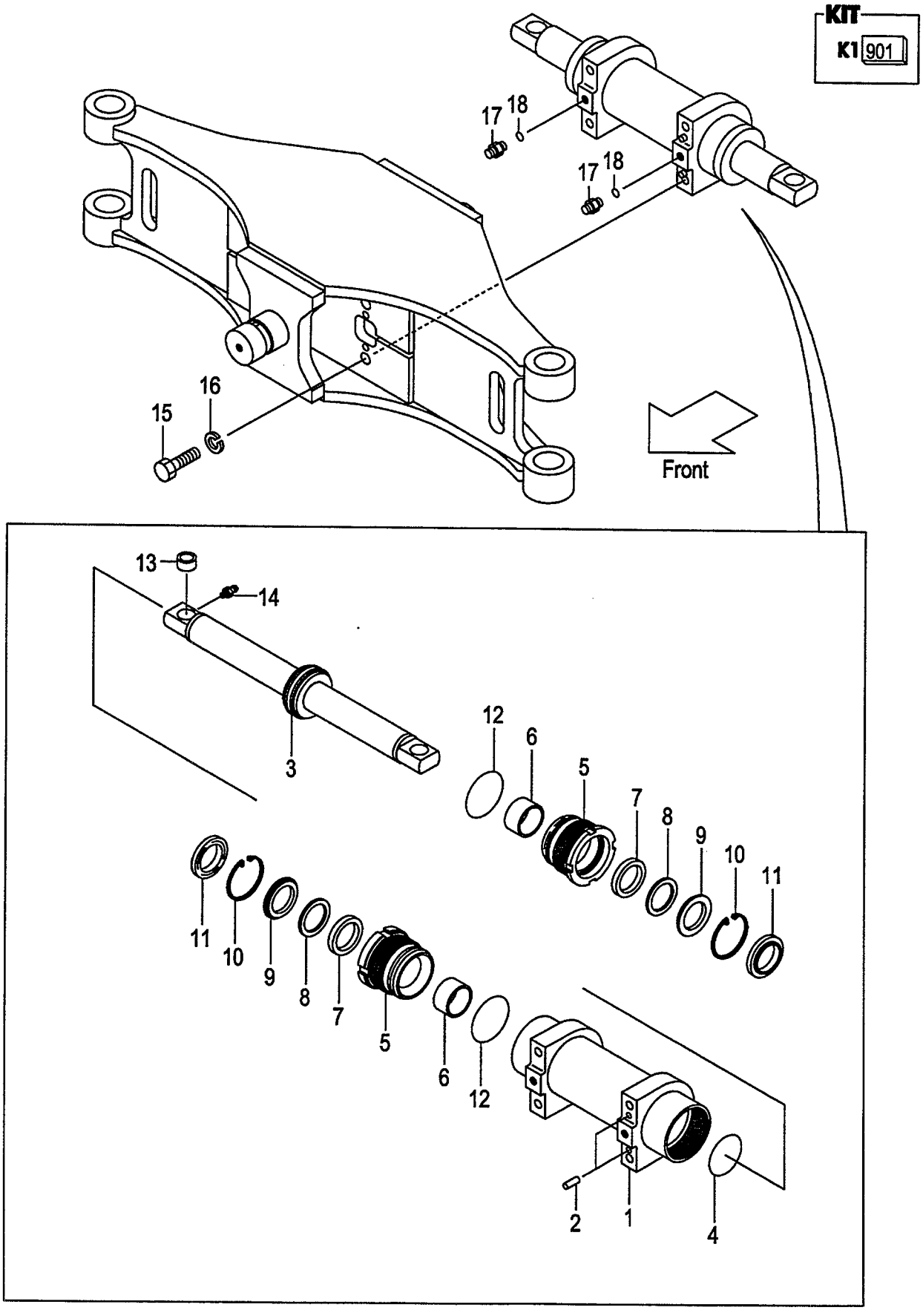

A:FD20C7 FD20T7 FD25C7 FD25T7

Item No	Part No.	Mark	Description		Req'd	Remarks : Serial No.
A1	533A2-40201		CYL-ASSY,PS	ﾊﾟﾜｽﾃｼﾘﾝﾀﾞｱｯｾﾝ	1	[EXC][EXE][EXK][EXN][OBT] [EXB/OBT] INC.1-14
901	514A2-49803	K1	KIT,REPAIR	ﾘﾍﾟｱｷｯﾄ	1	[EXC][EXE][EXK][EXN][OBT] [EXB/OBT] INC.4,7,8,10-12
1	514A2-40462		TUBE,CYL	ﾁｭｰﾌﾞ	1	[EXC][EXE][EXK][EXN][OBT] [EXB/OBT]
2	02212-10020		PIN,PARALLEL	ﾋﾟﾝ	2	[EXC][EXE][EXK][EXN][OBT] [EXB/OBT]
A2	533A2-40211		ROD-ASSY,PISTON	ﾋﾟｽﾄﾝﾛｯﾄﾞｱｯｾﾝ	1	[EXC][EXE][EXK][EXN][OBT] [EXB/OBT] INC.3,4
3	533A2-42001		ROD,PISTON	ﾛｯﾄﾞ	1	[EXC][EXE][EXK][EXN][OBT] [EXB/OBT]
4	25784-52342	*	SEAL	ｼｰﾙ	1	[EXC][EXE][EXK][EXN][OBT] [EXB/OBT]
5	215B4-52122		CAP,CYL	ｷｬｯﾌﾟ	2	[EXC][EXE][EXK][EXN][OBT] [EXB/OBT]
6	59595-55301		BUSHING	ﾌﾞｯｼﾝｸﾞ	2	[EXC][EXE][EXK][EXN][OBT] [EXB/OBT]
7	25958-52201	*	PACKING	ﾊﾟｯｷﾝｸﾞ	2	[EXC][EXE][EXK][EXN][OBT] [EXB/OBT]
8	25958-52211	*	RING,BACK-UP	ﾘﾝｸﾞ	2	[EXC][EXE][EXK][EXN][OBT] [EXB/OBT]
9	25958-52221		RETAINER	ﾘﾃｰﾅ	2	[EXC][EXE][EXK][EXN][OBT] [EXB/OBT]
10	02110-00062	*	RING,SNAP	ｽﾅｯﾌﾟﾘﾝｸﾞ	2	[EXC][EXE][EXK][EXN][OBT] [EXB/OBT]
11	24469-42701	*	SEAL,DUST	ｼｰﾙ	2	[EXC][EXE][EXK][EXN][OBT] [EXB/OBT]
12	214A8-52221	*	O-RING	Oﾘﾝｸﾞ	2	[EXC][EXE][EXK][EXN][OBT] [EXB/OBT]
13	533A2-42021		BUSH	ﾌﾞｯｼﾝｸﾞ	2	[EXC][EXE][EXK][EXN][OBT] [EXB/OBT]
14	214A8-52051		NIPPLE,GREASE	ﾆｯﾌﾟﾙ	2	[EXC][EXE][EXK][EXN][OBT] [EXB/OBT]
15	01100-14035		BOLT	ﾎﾞﾙﾄ	4	[EXC][EXE][EXK][EXN][OBT] [EXB/OBT]
16	02010-00014		WASHER	ﾜｯｼｬ	4	[EXC][EXE][EXK][EXN][OBT] [EXB/OBT]
A3	224W7-62701		NIPPLE-ASSY	ﾆｯﾌﾟﾙｱｯｾﾝ	2	[EXC][EXE][EXK][EXN][OBT] [EXB/OBT] INC.17,18
17	NO PART NO.	#	NIPPLE	ﾆｯﾌﾟﾙ	2	[EXC][EXE][EXK][EXN][OBT] [EXB/OBT]
18	03320-00110		O-RING	Oﾘﾝｸﾞ	2	[EXC][EXE][EXK][EXN][OBT] [EXB/OBT]

FIG.111 POWER CYLINDER [(EXC,EXE,EXK,EXN)/PSS]

(F6024530) ﾊﾟﾜｰｼﾘﾝﾀﾞ

KIT
K1 901

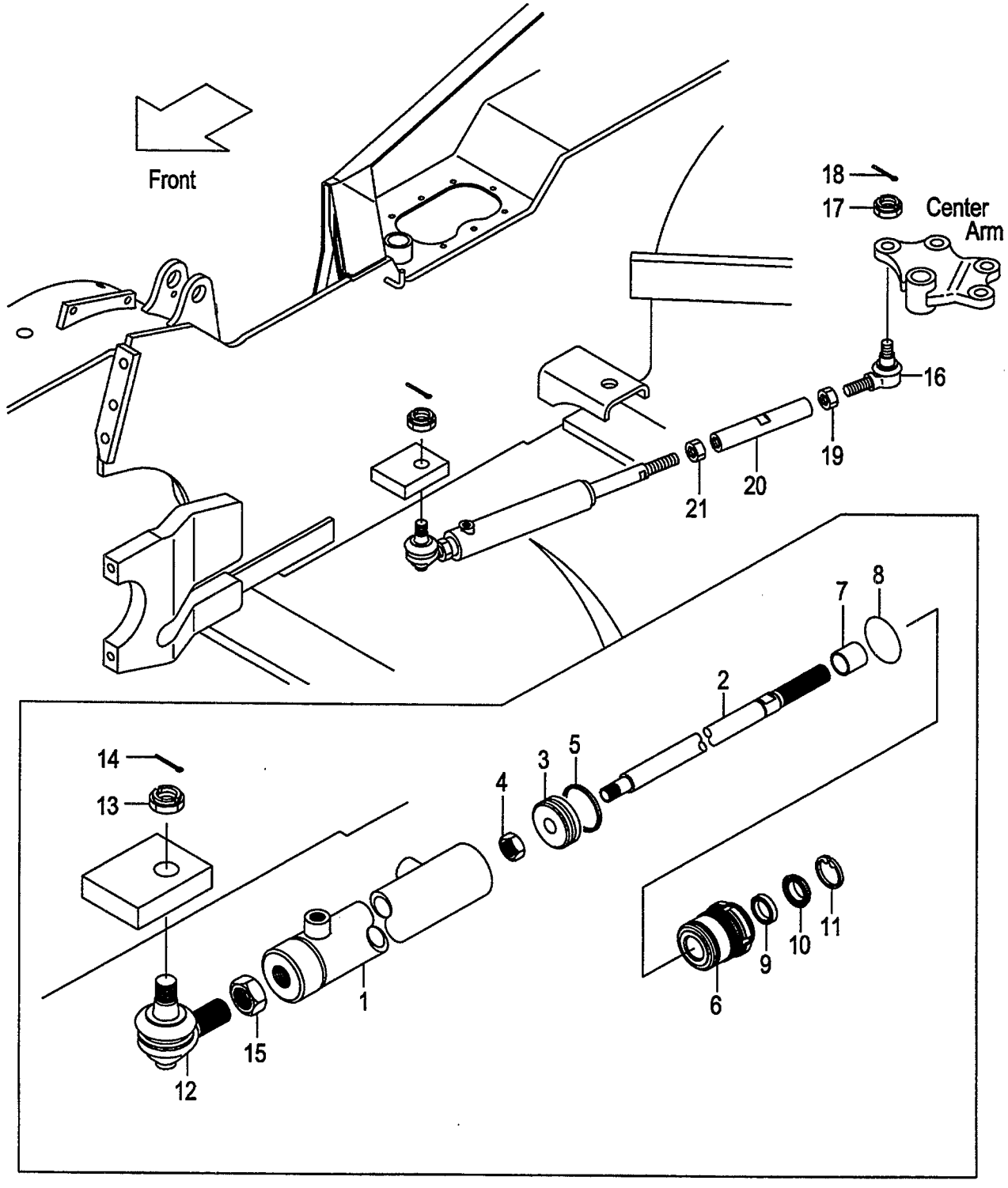

A:FD20C7 FD20T7 FD25C7 FD25T7

Item No	Part No.	Mark	Description		Req'd	Remarks : Serial No.
A1	238G4-50201		CYL-ASSY,PS	ﾊﾟﾜｽﾃｼﾘﾝﾀﾞｱｯｾﾝ	1	[EXC/PSS][EXE/PSS][EXK/PSS] [EXN/PSS] INC.1-15
901	214A4-59802	K1	KIT,REPAIR	ﾘﾍﾟｱｷｯﾄ	1	[EXC/PSS][EXE/PSS][EXK/PSS] [EXN/PSS] INC.5,8-11
1	238G4-50211		TUBE,CYL	ﾁｭｰﾌﾞ	1	[EXC/PSS][EXE/PSS][EXK/PSS] [EXN/PSS]
2	214A4-52041		ROD,PISTON	ﾛｯﾄﾞ	1	[EXC/PSS][EXE/PSS][EXK/PSS] [EXN/PSS]
3	214A4-52031		PISTON	ﾋﾟｽﾄﾝ	1	[EXC/PSS][EXE/PSS][EXK/PSS] [EXN/PSS]
4	01402-10018		NUT	ﾅｯﾄ	1	[EXC/PSS][EXE/PSS][EXK/PSS] [EXN/PSS]
5	25594-52362	*	SEAL,SLIPPER	ｼｰﾙ	1	[EXC/PSS][EXE/PSS][EXK/PSS] [EXN/PSS]
6	214A4-52021		CAP,CYL	ｷｬｯﾌﾟ	1	[EXC/PSS][EXE/PSS][EXK/PSS] [EXN/PSS]
7	25954-52061		BUSHING	ﾌﾞｯｼﾝｸﾞ	1	[EXC/PSS][EXE/PSS][EXK/PSS] [EXN/PSS]
8	03350-00450	*	O-RING	Oﾘﾝｸﾞ	1	[EXC/PSS][EXE/PSS][EXK/PSS] [EXN/PSS]
9	25954-52071	*	PACKING	ﾊﾟｯｷﾝｸﾞ	1	[EXC/PSS][EXE/PSS][EXK/PSS] [EXN/PSS]
10	25954-52081	*	SEAL,DUST	ｼｰﾙ	1	[EXC/PSS][EXE/PSS][EXK/PSS] [EXN/PSS]
11	25954-52091	*	RING,SNAP	ｽﾅｯﾌﾟﾘﾝｸﾞ	1	[EXC/PSS][EXE/PSS][EXK/PSS] [EXN/PSS]
A2	24234-30551		END-ASSY,ROD,RH	ｴﾝﾄﾞｱｯｾﾝ	1	[EXC/PSS][EXE/PSS][EXK/PSS] [EXN/PSS] INC.12-15
12	NO PART NO.	#	END,ROD,RH	ｴﾝﾄﾞ	1	[EXC/PSS][EXE/PSS][EXK/PSS] [EXN/PSS]
13	01412-10016		NUT,CASTLE	ﾅｯﾄ	1	[EXC/PSS][EXE/PSS][EXK/PSS] [EXN/PSS]
14	02200-32032		PIN,COTTER	ﾋﾟﾝ	1	[EXC/PSS][EXE/PSS][EXK/PSS] [EXN/PSS]
15	01402-00022		NUT	ﾅｯﾄ	1	[EXC/PSS][EXE/PSS][EXK/PSS] [EXN/PSS]
A3	24234-30561		END-ASSY,ROD,LH	ｴﾝﾄﾞｱｯｾﾝ	1	[EXC/PSS][EXE/PSS][EXK/PSS] [EXN/PSS] INC.16-18
16	NO PART NO.	#	END,ROD,LH	ｴﾝﾄﾞ	1	[EXC/PSS][EXE/PSS][EXK/PSS] [EXN/PSS]
17	01412-10016		NUT,CASTLE	ﾅｯﾄ	1	[EXC/PSS][EXE/PSS][EXK/PSS] [EXN/PSS]
18	02200-32032		PIN,COTTER	ﾋﾟﾝ	1	[EXC/PSS][EXE/PSS][EXK/PSS] [EXN/PSS]
19	01407-00022		NUT,LH	ﾅｯﾄ	1	[EXC/PSS][EXE/PSS][EXK/PSS] [EXN/PSS]
20	238G4-52201		ROD,CONNECTING	ﾛｯﾄﾞ	1	[EXC/PSS][EXE/PSS][EXK/PSS] [EXN/PSS]
21	01402-00024		NUT	ﾅｯﾄ	1	[EXC/PSS][EXE/PSS][EXK/PSS] [EXN/PSS]

FIG.112 POWER CYLINDER BOOT [PSB][FC][RINFC]

(F6024540) ﾊﾟﾜｰｼﾘﾝﾀﾞﾌﾞｰﾂ

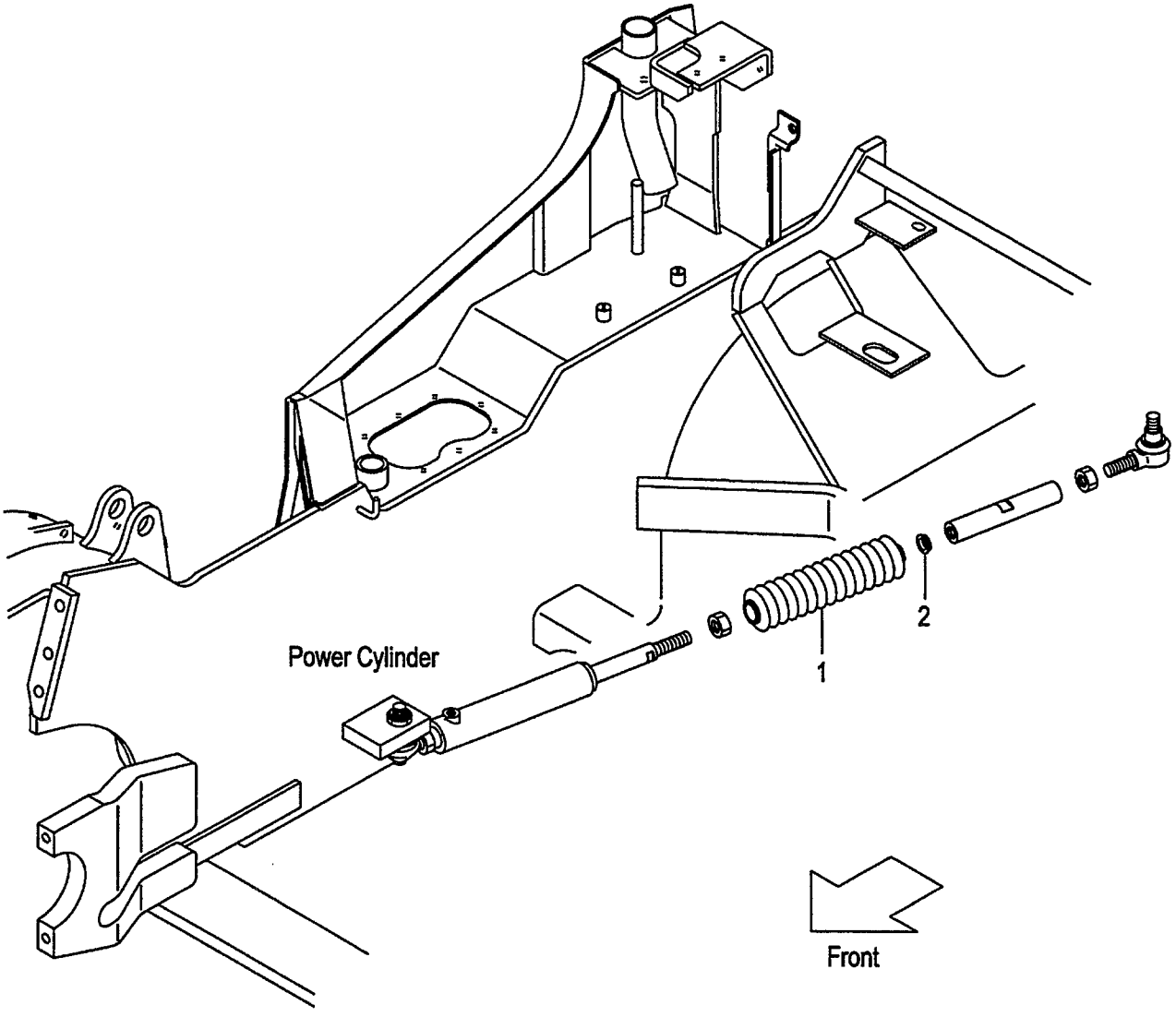

A:FD20C18 FD20T18 FD25C18 FD25T18
B:FD20C7 FD20T7 FD25C7 FD25T7 FD20W7 FD25W7

FIG.112
(F6024540)

Item No	Part No.	Mark	Description	Req'd	Remarks : Serial No.
1	25594-52431		BOOT,POWER-CYL ﾌﾞｰﾂ	1	[PSB][FC][RINFC]
2	23654-52021		HANGER,BOOT ﾊﾝｶﾞ	1	[PSB][FC][RINFC]

FIG.113 OVERHEAD GUARD

(F6025110) オーバヘッドガード

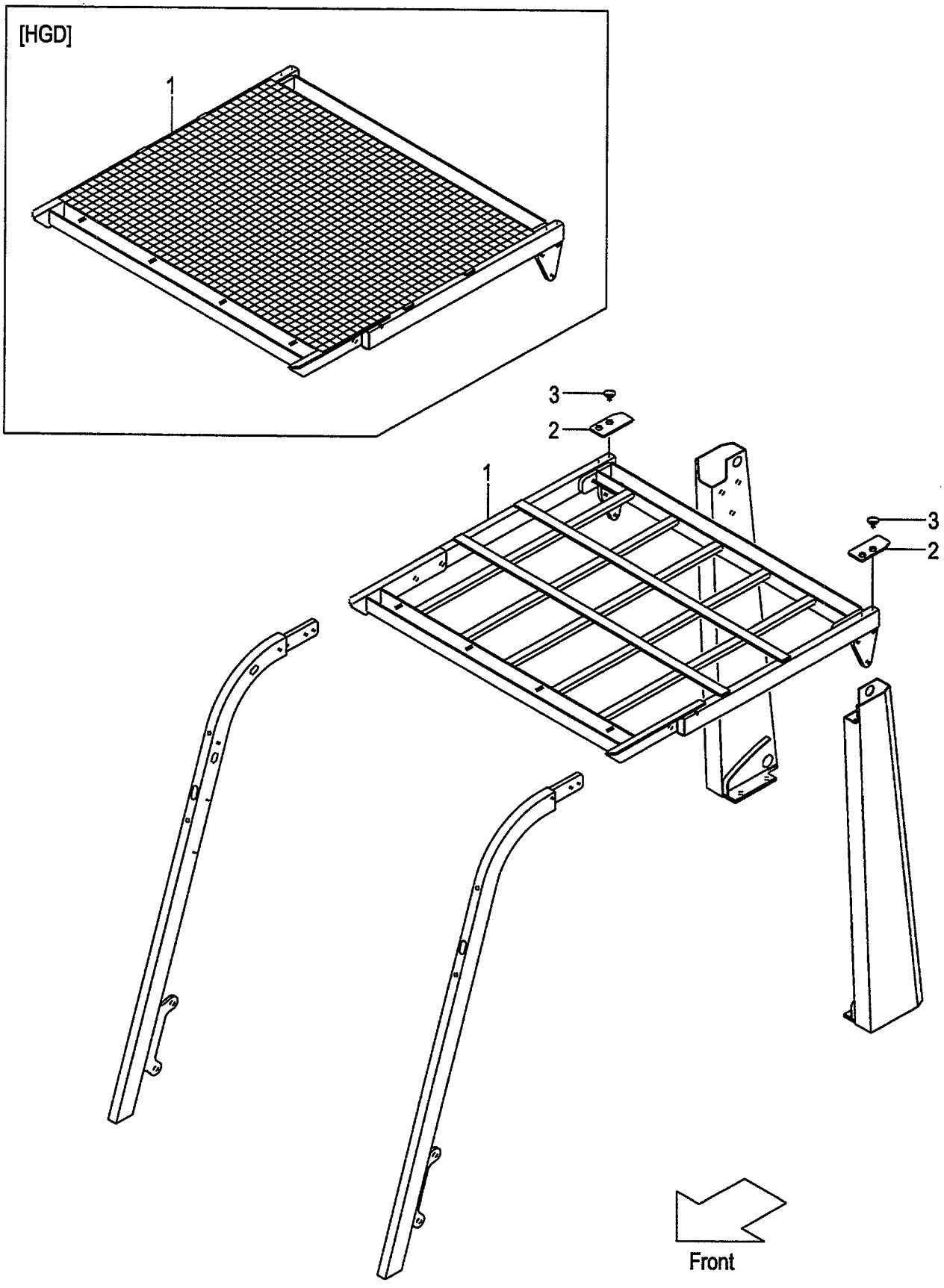

A:FD20C18 FD20T18 FD25C18 FD25T18
B:FD20C7 FD20T7 FD25C7 FD25T7 FD20W7 FD25W7

FIG.113
(F6025110)

Item No	Part No.	Mark	Description		Req'd	Remarks : Serial No.
1	218M5-10401		GUARD,HEAD	ｶﾞｰﾄﾞ	1	(WITHOUT SCB001,SCBCR)
-	539A2-90201		GUARD,HEAD	ｶﾞｰﾄﾞ	1	[HGD]
-	539A5-00401		GUARD,HEAD	ｶﾞｰﾄﾞ	1	B [HGH060]
-	539A5-00701		GUARD,HEAD	ｶﾞｰﾄﾞ	1	B [HGH100]
-	539A5-00501		GUARD,HEAD	ｶﾞｰﾄﾞ	1	B [HGH150]
-	539A5-00601		GUARD,HEAD	ｶﾞｰﾄﾞ	1	B [HGH200]
2	218M5-12501		COVER	ｶﾊﾞｰ	2	(WITHOUT SCB001,SCBCR)
3	216G6-42541		CLIP	ｸﾘｯﾌﾟ	4	(WITHOUT SCB001,SCBCR)

FIG.114 OVERHEAD GUARD [EXB][EXC][EXE][EXK][EXN]

(F6025180) オーバヘッドガード

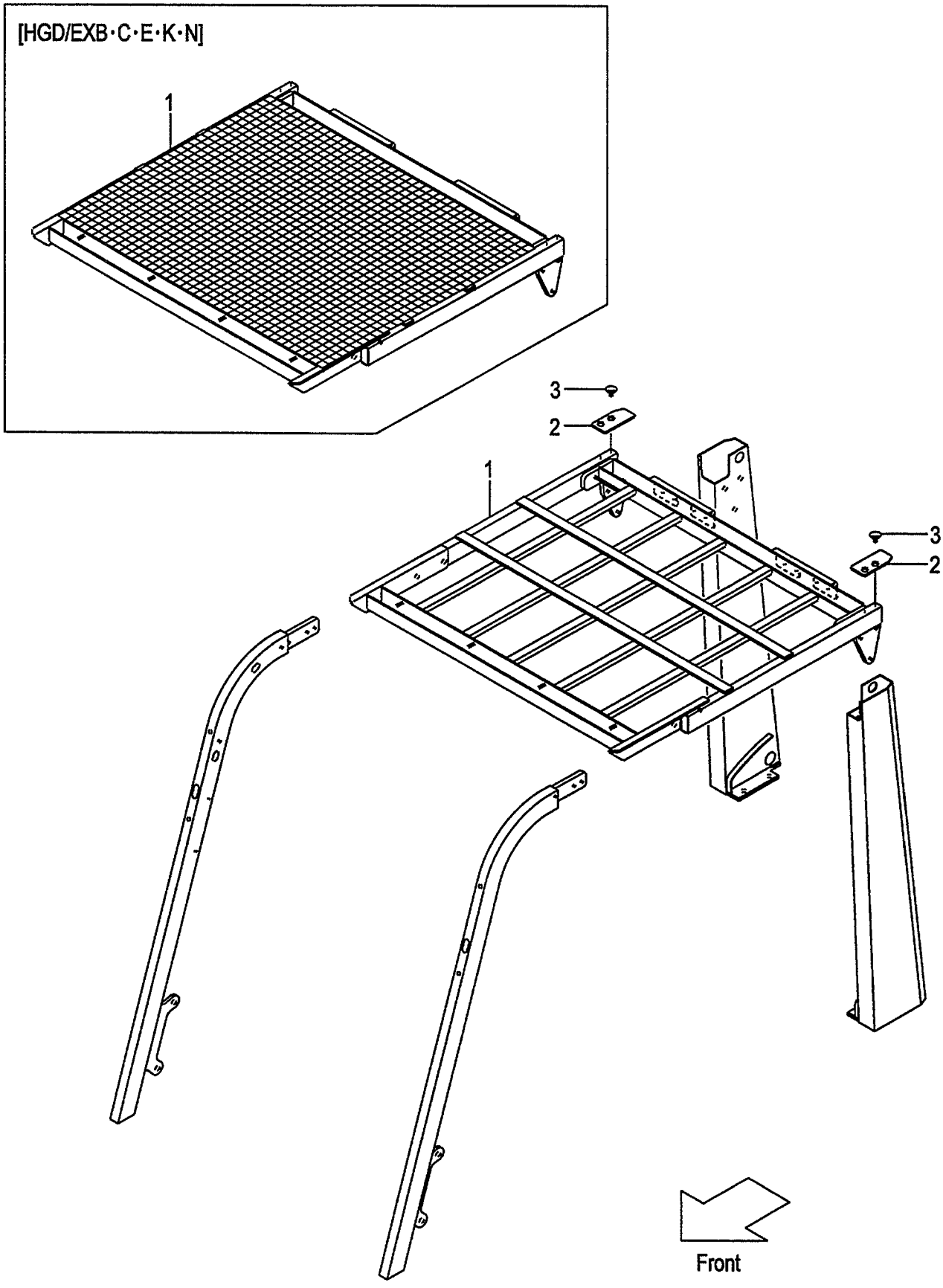

FIG.114
(F6025180)

A:FD20C7 FD20T7 FD25C7 FD25T7

Item No	Part No.	Mark	Description		Req'd	Remarks : Serial No.
1	518G2-80231		GUARD,HEAD	ｶﾞｰﾄﾞ	1	[EXB][EXC][EXE][EXK]
-	539A2-60231		GUARD,HEAD	ｶﾞｰﾄﾞ	1	[EXN]
-	539A2-90301		GUARD,HEAD	ｶﾞｰﾄﾞ	1	[HGD/EXB&C&E&K]
-	539A2-90401		GUARD,HEAD	ｶﾞｰﾄﾞ	1	[HGD/EXN]
-	539A2-80301		GUARD,HEAD	ｶﾞｰﾄﾞ	1	[HGH100/EXB&C&E&N&K]
-	539A2-80501		GUARD,HEAD	ｶﾞｰﾄﾞ	1	[HGH200/EXB&C&E&N&K]
2	218M5-12501		COVER	ｶﾊﾞｰ	2	[EXB][EXC][EXE][EXK][EXN]
3	216G6-42541		CLIP	ｸﾘｯﾌﾟ	4	[EXB][EXC][EXE][EXK][EXN]

FIG.115 FRONT PIPE

(F6025120) フロントパイプ

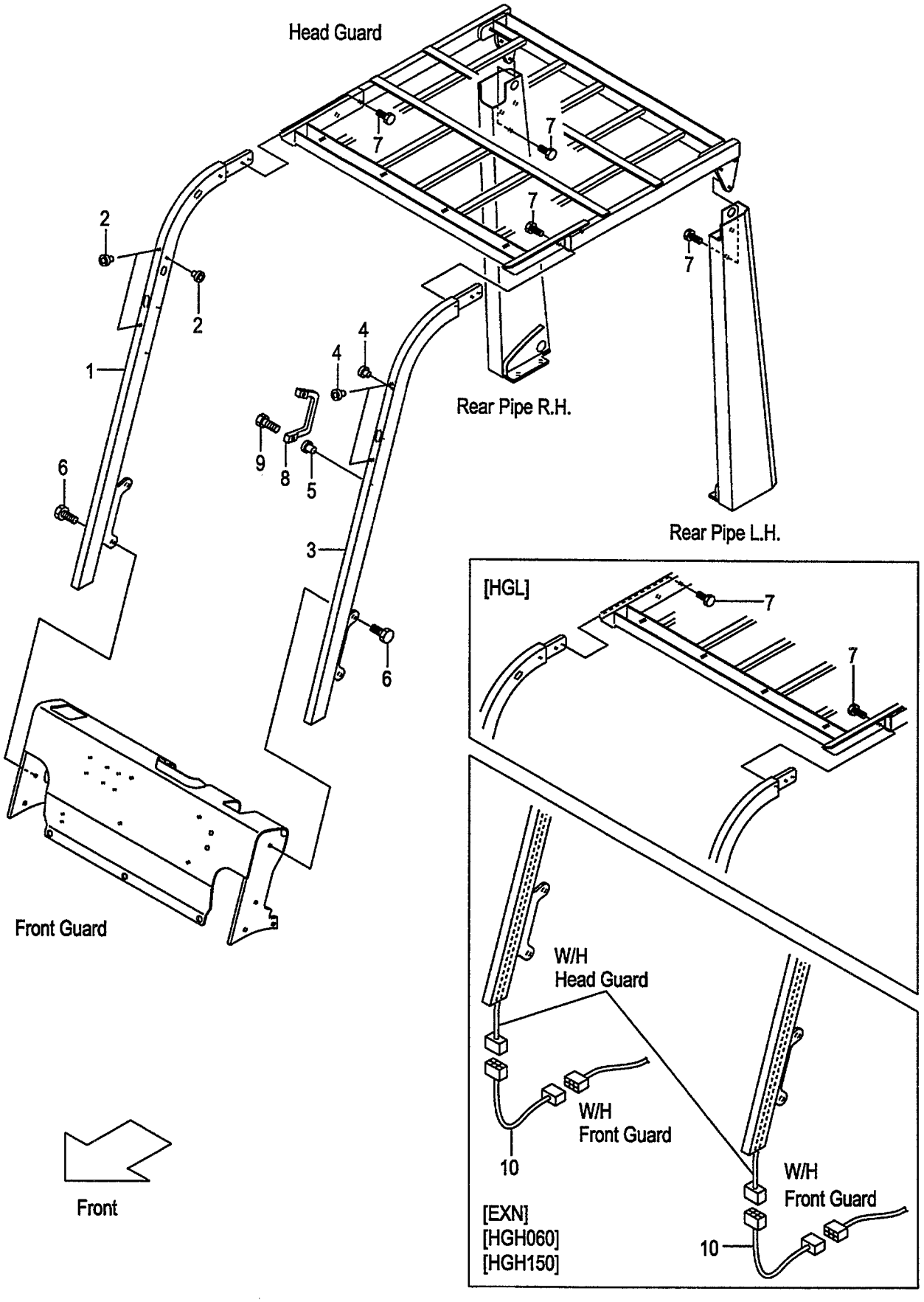

A:FD20C7 FD20T7 FD25C7 FD25T7
B:FD20W7 FD25W7

FIG.115
(F6025120)

Item No	Part No.	Mark	Description		Req'd	Remarks : Serial No.
A1	239A5-10342		PIPE-ASSY,FRONT,RH	ﾌﾛﾝﾄﾊﾟｲﾌﾟｱｯｾﾝ	1	(WITHOUT SCB001,SCBCR) INC.1,2
-	539A5-00152		PIPE-ASSY,FRONT,RH	ﾌﾛﾝﾄﾊﾟｲﾌﾟｱｯｾﾝ	1	A [EXN] INC.1,2
-	236A5-10342		PIPE-ASSY,FRONT,RH	ﾌﾛﾝﾄﾊﾟｲﾌﾟｱｯｾﾝ	1	[HGL] INC.1,2
-	539A5-00152		PIPE-ASSY,FRONT,RH	ﾌﾛﾝﾄﾊﾟｲﾌﾟｱｯｾﾝ	1	[HGH060] INC.1,2
-	539A2-80172		PIPE-ASSY,FRONT,RH	ﾌﾛﾝﾄﾊﾟｲﾌﾟｱｯｾﾝ	1	[HGH100] INC.1,2
-	539A5-00172		PIPE-ASSY,FRONT,RH	ﾌﾛﾝﾄﾊﾟｲﾌﾟｱｯｾﾝ	1	[HGH150] INC.1,2
-	539A2-80192		PIPE-ASSY,FRONT,RH	ﾌﾛﾝﾄﾊﾟｲﾌﾟｱｯｾﾝ	1	[HGH200] INC.1,2
-	236A5-10342		PIPE-ASSY,FRONT,RH	ﾌﾛﾝﾄﾊﾟｲﾌﾟｱｯｾﾝ	1	A [HGL/EXB&C&E&K&N] INC.1,2
-	539A2-80172		PIPE-ASSY,FRONT,RH	ﾌﾛﾝﾄﾊﾟｲﾌﾟｱｯｾﾝ	1	A [HGH100/EXB&C&E&K&N] INC.1,2
-	539A2-80192		PIPE-ASSY,FRONT,RH	ﾌﾛﾝﾄﾊﾟｲﾌﾟｱｯｾﾝ	1	A [HGH200/EXB&C&E&K&N] INC.1,2
1	NO PART NO.	#	PIPE,FRONT,RH	ﾊﾟｲﾌﾟ	1	(WITHOUT SCB001,SCBCR)
-	NO PART NO.	#	PIPE,FRONT,RH	ﾊﾟｲﾌﾟ	1	A [EXN]
-	NO PART NO.	#	PIPE,FRONT,RH	ﾊﾟｲﾌﾟ	1	[HGL]
-	NO PART NO.	#	PIPE,FRONT,RH	ﾊﾟｲﾌﾟ	1	[HGH060]
-	NO PART NO.	#	PIPE,FRONT,RH	ﾊﾟｲﾌﾟ	1	[HGH100]
-	NO PART NO.	#	PIPE,FRONT,RH	ﾊﾟｲﾌﾟ	1	[HGH150]
-	NO PART NO.	#	PIPE,FRONT,RH	ﾊﾟｲﾌﾟ	1	[HGH200]
-	NO PART NO.	#	PIPE,FRONT,RH	ﾊﾟｲﾌﾟ	1	A [HGL/EXB&C&E&K&N]
-	NO PART NO.	#	PIPE,FRONT,RH	ﾊﾟｲﾌﾟ	1	A [HGH100/EXB&C&E&K&N]
-	NO PART NO.	#	PIPE,FRONT,RH	ﾊﾟｲﾌﾟ	1	A [HGH200/EXB&C&E&K&N]
2	514A5-12011		RIVET,POP	ﾘﾍﾞｯﾄ	3	(WITHOUT SCB001,SCBCR)
A2	239A5-10352		PIPE-ASSY,FRONT,LH	ﾌﾛﾝﾄﾊﾟｲﾌﾟｱｯｾﾝ	1	(WITHOUT SCB001,SCBCR) INC.3-5
-	539A5-00162		PIPE-ASSY,FRONT,LH	ﾌﾛﾝﾄﾊﾟｲﾌﾟｱｯｾﾝ	1	A [EXN] INC.3-5
-	236A5-10352		PIPE-ASSY,FRONT,LH	ﾌﾛﾝﾄﾊﾟｲﾌﾟｱｯｾﾝ	1	[HGL] INC.3-5
-	539A5-00162		PIPE-ASSY,FRONT,LH	ﾌﾛﾝﾄﾊﾟｲﾌﾟｱｯｾﾝ	1	[HGH060] INC.3-5
-	539A2-80182		PIPE-ASSY,FRONT,LH	ﾌﾛﾝﾄﾊﾟｲﾌﾟｱｯｾﾝ	1	[HGH100] INC.3-5
-	539A5-00182		PIPE-ASSY,FRONT,LH	ﾌﾛﾝﾄﾊﾟｲﾌﾟｱｯｾﾝ	1	[HGH150] INC.3-5
-	539A2-80202		PIPE-ASSY,FRONT,LH	ﾌﾛﾝﾄﾊﾟｲﾌﾟｱｯｾﾝ	1	[HGH200] INC.3-5
-	236A5-10352		PIPE-ASSY,FRONT,LH	ﾌﾛﾝﾄﾊﾟｲﾌﾟｱｯｾﾝ	1	A [HGL/EXB&C&E&K&N] INC.3-5
-	539A2-80182		PIPE-ASSY,FRONT,LH	ﾌﾛﾝﾄﾊﾟｲﾌﾟｱｯｾﾝ	1	A [HGH100/EXB&C&E&K&N] INC.3-5
-	539A2-80202		PIPE-ASSY,FRONT,LH	ﾌﾛﾝﾄﾊﾟｲﾌﾟｱｯｾﾝ	1	A [HGH200/EXB&C&E&K&N] INC.3-5
3	NO PART NO.	#	PIPE,FRONT,LH	ﾊﾟｲﾌﾟ	1	(WITHOUT SCB001,SCBCR)
-	NO PART NO.	#	PIPE,FRONT,LH	ﾊﾟｲﾌﾟ	1	A [EXN]
-	NO PART NO.	#	PIPE,FRONT,LH	ﾊﾟｲﾌﾟ	1	[HGL]
-	NO PART NO.	#	PIPE,FRONT,LH	ﾊﾟｲﾌﾟ	1	[HGH060]
-	NO PART NO.	#	PIPE,FRONT,LH	ﾊﾟｲﾌﾟ	1	[HGH100]
-	NO PART NO.	#	PIPE,FRONT,LH	ﾊﾟｲﾌﾟ	1	[HGH150]

FIG.115 FRONT PIPE

(F6025120) フロントパイプ

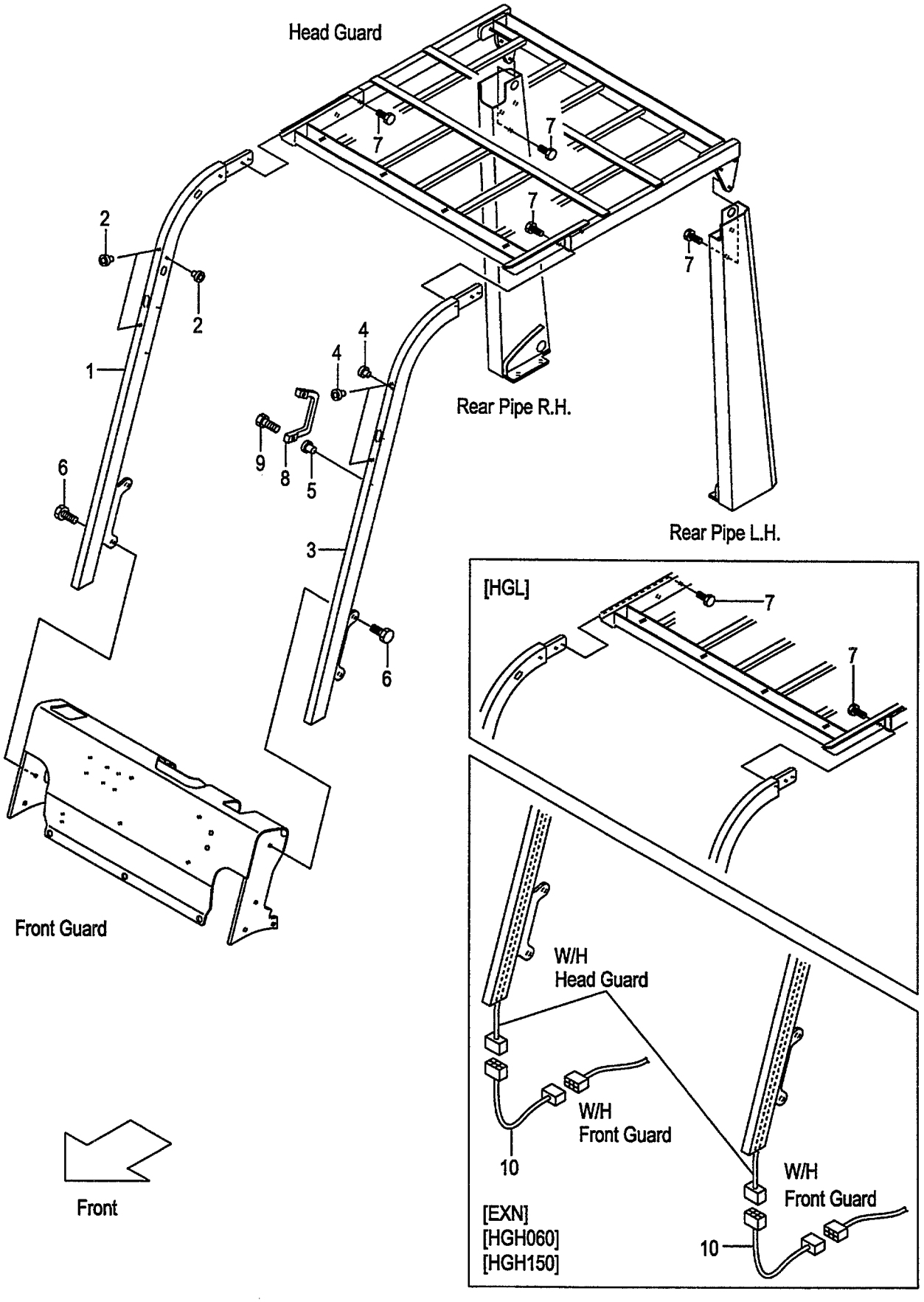

A:FD20C7 FD20T7 FD25C7 FD25T7
B:FD20W7 FD25W7

FIG.115
(F6025120)

Item No	Part No.	Mark	Description		Req'd	Remarks : Serial No.
-	NO PART NO.	#	PIPE,FRONT,LH	ﾊﾟｲﾌﾟ	1	[HGH200]
-	NO PART NO.	#	PIPE,FRONT,LH	ﾊﾟｲﾌﾟ	1	A [HGL/EXB&C&E&K&N]
-	NO PART NO.	#	PIPE,FRONT,LH	ﾊﾟｲﾌﾟ	1	A [HGH100/EXB&C&E&K&N]
-	NO PART NO.	#	PIPE,FRONT,LH	ﾊﾟｲﾌﾟ	1	A [HGH200/EXB&C&E&K&N]
4	514A5-12011		RIVET,POP	ﾘﾍﾞｯﾄ	3	(WITHOUT SCB001,SCBCR)
5	516G5-13151		RIVET,POP	ﾘﾍﾞｯﾄ	2	(WITHOUT SCB001,SCBCR)
6	01186-12025		BOLT	ﾎﾞﾙﾄ	4	(WITHOUT SCB001,SCBCR)
7	01186-12035		BOLT	ﾎﾞﾙﾄ	10	(WITHOUT SCB001,SCBCR)
8	516G5-13051		GRIP	ｸﾞﾘｯﾌﾟ	1	(WITHOUT SCB001,SCBCR)
9	01171-06025		BOLT	ﾎﾞﾙﾄ	2	(WITHOUT SCB001,SCBCR)
10	229F2-42141		WIRE-HARNESS,R-COMB.	ﾜｲﾔﾊｰﾈｽ	2	A [EXN]
-	229F2-42141		WIRE-HARNESS,R-COMB.	ﾜｲﾔﾊｰﾈｽ	2	[HGH060][HGH150]

FIG.116 FRONT PIPE

(F6025190) フロントパイプ

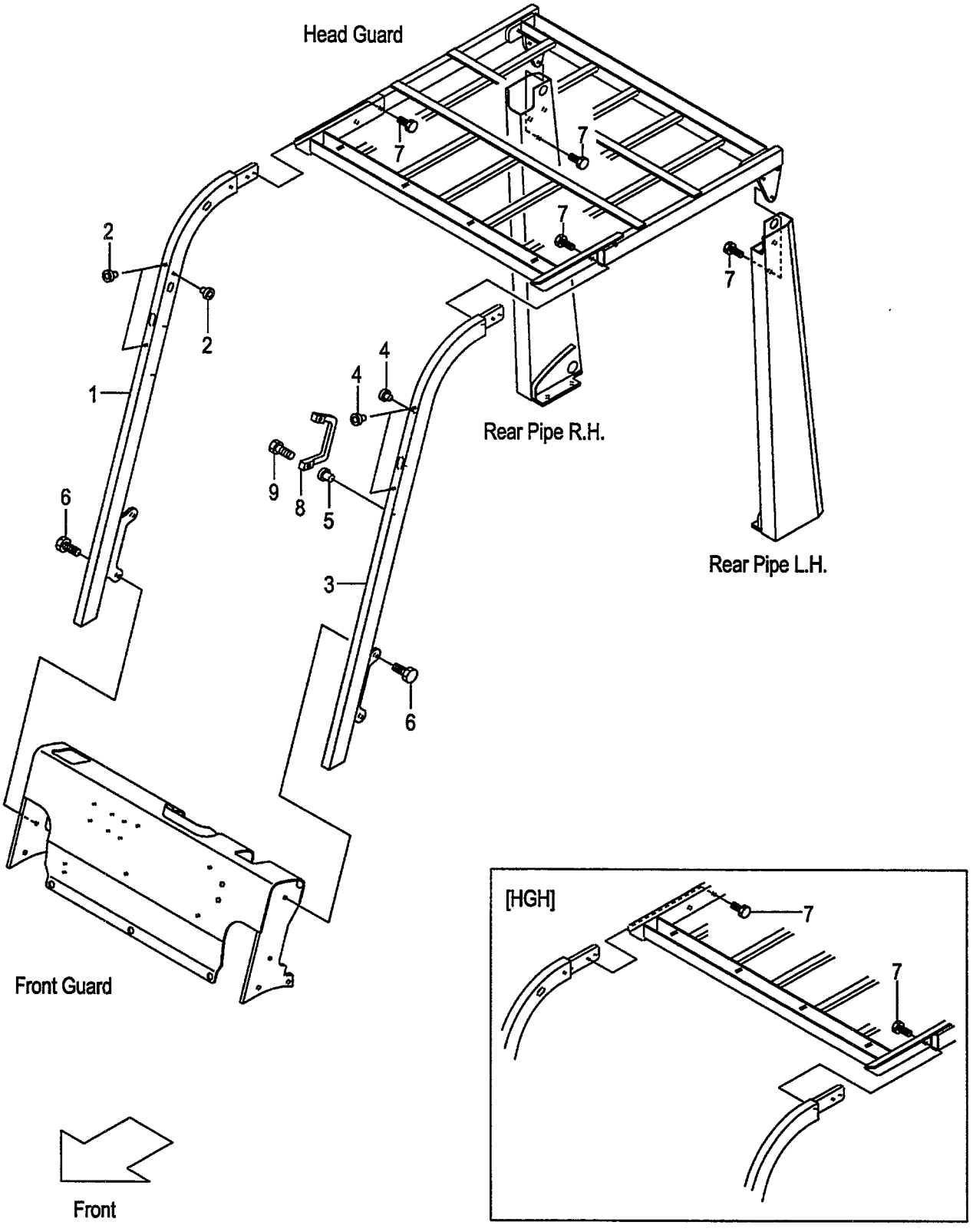

A:FD20C18 FD20T18 FD25C18 FD25T18

Item No	Part No.	Mark	Description		Req'd	Remarks : Serial No.
A1	236A5-10342		PIPE-ASSY,FRONT,RH	ﾌﾛﾝﾄﾊﾟｲﾌﾟｱｯｾﾝ	1	INC.1,2
-	239A5-10342		PIPE-ASSY,FRONT,RH	ﾌﾛﾝﾄﾊﾟｲﾌﾟｱｯｾﾝ	1	[HGH] INC.1,2
1	NO PART NO.	#	PIPE,FRONT,RH	ﾊﾟｲﾌﾟ	1	
-	NO PART NO.	#	PIPE,FRONT,RH	ﾊﾟｲﾌﾟ	1	[HGH]
2	514A5-12011		RIVET,POP	ﾘﾍﾞｯﾄ	3	
A2	236A5-10352		PIPE-ASSY,FRONT,LH	ﾌﾛﾝﾄﾊﾟｲﾌﾟｱｯｾﾝ	1	INC.3-5
-	239A5-10352		PIPE-ASSY,FRONT,LH	ﾌﾛﾝﾄﾊﾟｲﾌﾟｱｯｾﾝ	1	[HGH] INC.3-5
3	NO PART NO.	#	PIPE,FRONT,LH	ﾊﾟｲﾌﾟ	1	
-	NO PART NO.	#	PIPE,FRONT,LH	ﾊﾟｲﾌﾟ	1	[HGH]
4	514A5-12011		RIVET,POP	ﾘﾍﾞｯﾄ	3	
5	516G5-13151		RIVET,POP	ﾘﾍﾞｯﾄ	2	
6	01186-12025		BOLT	ﾎﾞﾙﾄ	4	
7	01186-12035		BOLT	ﾎﾞﾙﾄ	10	
8	516G5-13051		GRIP	ｸﾞﾘｯﾌﾟ	1	
9	01171-06025		BOLT	ﾎﾞﾙﾄ	2	

FIG.117 REAR PIPE

(F6025130) ﾘﾔｰﾊﾟｲﾌﾟ

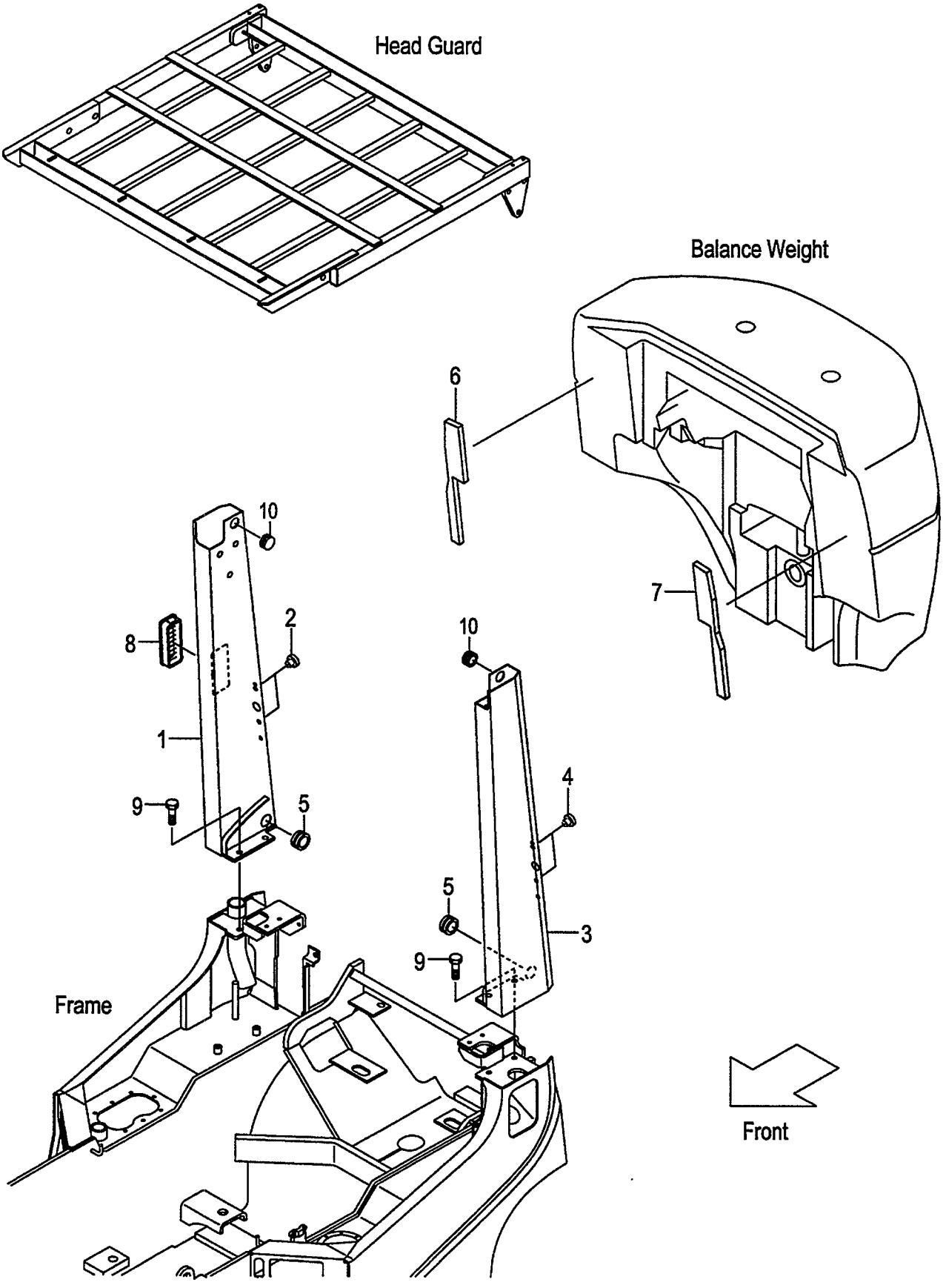

A:FD20C18 FD20T18 FD25C18 FD25T18
B:FD20C7 FD20T7 FD20W7
C:FD25C7 FD25T7 FD25W7

FIG.117
(F6025130)

Item No	Part No.	Mark	Description		Req'd	Remarks : Serial No.
A1	218G5-10111		PIPE-ASSY,REAR,RH	ﾘﾔｰﾊﾟｲﾌﾟｱｯｾﾝ	1	A (WITHOUT SCB001,SCBCR) INC.1,2
-	239A5-10111		PIPE-ASSY,REAR,RH	ﾘﾔｰﾊﾟｲﾌﾟｱｯｾﾝ	1	B,C (WITHOUT SCB001,SCBCR) INC.1,2
-	218G5-10111		PIPE-ASSY,REAR,RH	ﾘﾔｰﾊﾟｲﾌﾟｱｯｾﾝ	1	B,C [HGL] INC.1,2
-	239A5-10111		PIPE-ASSY,REAR,RH	ﾘﾔｰﾊﾟｲﾌﾟｱｯｾﾝ	1	A [HGH] INC.1,2
-	539A5-00111		PIPE-ASSY,REAR,RH	ﾘﾔｰﾊﾟｲﾌﾟｱｯｾﾝ	1	B,C [HGH060] INC.1,2
-	539A5-00351		PIPE-ASSY,REAR,RH	ﾘﾔｰﾊﾟｲﾌﾟｱｯｾﾝ	1	B,C [HGH100] INC.1,2
-	539A5-00131		PIPE-ASSY,REAR,RH	ﾘﾔｰﾊﾟｲﾌﾟｱｯｾﾝ	1	B,C [HGH150] INC.1,2
-	539A5-00371		PIPE-ASSY,REAR,RH	ﾘﾔｰﾊﾟｲﾌﾟｱｯｾﾝ	1	B,C [HGH200] INC.1,2
-	518G0-90111		PIPE-ASSY,REAR,RH	ﾘﾔｰﾊﾟｲﾌﾟｱｯｾﾝ	1	A [CAKB] INC.1,2
-	539A0-90111		PIPE-ASSY,REAR,RH	ﾘﾔｰﾊﾟｲﾌﾟｱｯｾﾝ	1	B,C [CAKB] INC.1,2 (WITHOUT CAKB/SCB001, CAKB/SCBCR)
-	518G0-90111		PIPE-ASSY,REAR,RH	ﾘﾔｰﾊﾟｲﾌﾟｱｯｾﾝ	1	B,C [CAKB/HGL] INC.1,2
1	NO PART NO.	#	PIPE,REAR,RH	ﾊﾟｲﾌﾟ	1	A (WITHOUT SCB001,SCBCR)
-	NO PART NO.	#	PIPE,REAR,RH	ﾊﾟｲﾌﾟ	1	B,C (WITHOUT SCB001,SCBCR)
-	NO PART NO.	#	PIPE,REAR,RH	ﾊﾟｲﾌﾟ	1	B,C [HGL]
-	NO PART NO.	#	PIPE,REAR,RH	ﾊﾟｲﾌﾟ	1	A [HGH]
-	NO PART NO.	#	PIPE,REAR,RH	ﾊﾟｲﾌﾟ	1	B,C [HGH060]
-	NO PART NO.	#	PIPE,REAR,RH	ﾊﾟｲﾌﾟ	1	B,C [HGH100]
-	NO PART NO.	#	PIPE,REAR,RH	ﾊﾟｲﾌﾟ	1	B,C [HGH150]
-	NO PART NO.	#	PIPE,REAR,RH	ﾊﾟｲﾌﾟ	1	B,C [HGH200]
-	NO PART NO.	#	PIPE,REAR,RH	ﾊﾟｲﾌﾟ	1	A [CAKB]
-	NO PART NO.	#	PIPE,REAR,RH	ﾊﾟｲﾌﾟ	1	B,C [CAKB] (WITHOUT CAKB/SCB001, CAKB/SCBCR)
-	NO PART NO.	#	PIPE,REAR,RH	ﾊﾟｲﾌﾟ	1	B,C [CAKB/HGL]
2	514A5-12011		RIVET,POP	ﾘﾍﾞｯﾄ	2	(WITHOUT SCB001,SCBCR)

FIG.117 REAR PIPE

(F6025130) ﾘﾔｰﾊﾟｲﾌﾟ

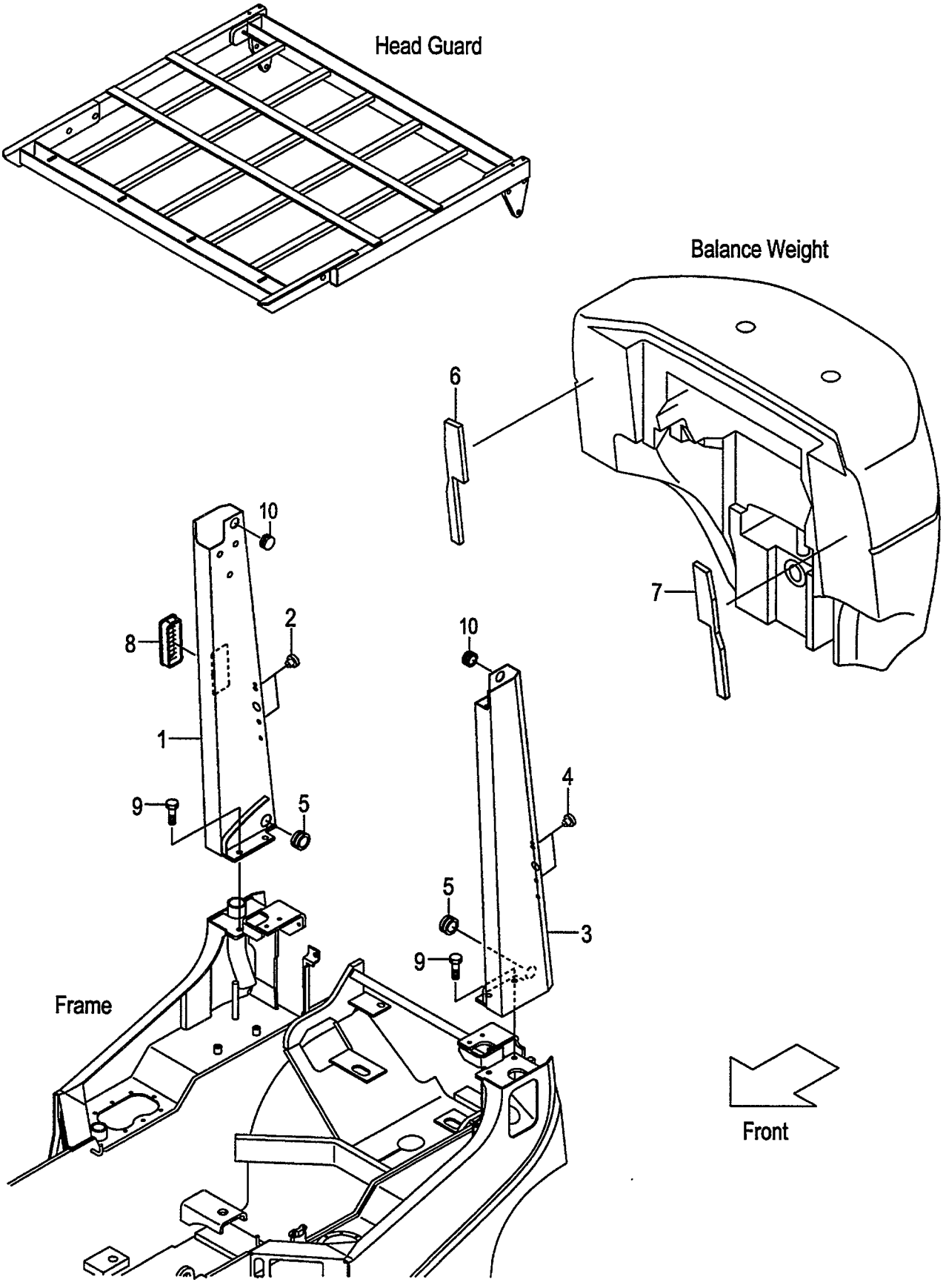

A:FD20C18 FD20T18 FD25C18 FD25T18
B:FD20C7 FD20T7 FD20W7
C:FD25C7 FD25T7 FD25W7

FIG.117
(F6025130)

Item No	Part No.	Mark	Description		Req'd	Remarks : Serial No.
A2	218G5-10121		PIPE-ASSY,REAR,LH	ﾘﾔｰﾊﾟｲﾌﾟｱｯｾﾝ	1	A (WITHOUT SCB001,SCBCR) INC.3,4
-	239A5-10121		PIPE-ASSY,REAR,LH	ﾘﾔｰﾊﾟｲﾌﾟｱｯｾﾝ	1	B,C (WITHOUT SCB001,SCBCR) INC.3,4
-	218G5-10121		PIPE-ASSY,REAR,LH	ﾘﾔｰﾊﾟｲﾌﾟｱｯｾﾝ	1	B,C [HGL] INC.3,4
-	239A5-10121		PIPE-ASSY,REAR,LH	ﾘﾔｰﾊﾟｲﾌﾟｱｯｾﾝ	1	A [HGH] INC.3,4
-	539A5-00121		PIPE-ASSY,REAR,LH	ﾘﾔｰﾊﾟｲﾌﾟｱｯｾﾝ	1	B,C [HGH060] INC.3,4
-	539A5-00361		PIPE-ASSY,REAR,LH	ﾘﾔｰﾊﾟｲﾌﾟｱｯｾﾝ	1	B,C [HGH100] INC.3,4
-	539A5-00141		PIPE-ASSY,REAR,LH	ﾘﾔｰﾊﾟｲﾌﾟｱｯｾﾝ	1	B,C [HGH150] INC.3,4
-	539A5-00381		PIPE-ASSY,REAR,LH	ﾘﾔｰﾊﾟｲﾌﾟｱｯｾﾝ	1	B,C [HGH200] INC.3,4
-	218G5-10121		PIPE-ASSY,REAR,LH	ﾘﾔｰﾊﾟｲﾌﾟｱｯｾﾝ	1	B,C [CAKB/HGL] INC.3,4
3	NO PART NO.	#	PIPE,REAR,LH	ﾊﾟｲﾌﾟ	1	A (WITHOUT SCB001,SCBCR)
-	NO PART NO.	#	PIPE,REAR,LH	ﾊﾟｲﾌﾟ	1	B,C (WITHOUT SCB001,SCBCR)
-	NO PART NO.	#	PIPE,REAR,LH	ﾊﾟｲﾌﾟ	1	B,C [HGL]
-	NO PART NO.	#	PIPE,REAR,LH	ﾊﾟｲﾌﾟ	1	A [HGH]
-	NO PART NO.	#	PIPE,REAR,LH	ﾊﾟｲﾌﾟ	1	B,C [HGH060]
-	NO PART NO.	#	PIPE,REAR,LH	ﾊﾟｲﾌﾟ	1	B,C [HGH100]
-	NO PART NO.	#	PIPE,REAR,LH	ﾊﾟｲﾌﾟ	1	B,C [HGH150]
-	NO PART NO.	#	PIPE,REAR,LH	ﾊﾟｲﾌﾟ	1	B,C [HGH200]
-	NO PART NO.	#	PIPE,REAR,LH	ﾊﾟｲﾌﾟ	1	B,C [CAKB/HGL]
4	514A5-12011		RIVET,POP	ﾘﾍﾞｯﾄ	2	(WITHOUT SCB001,SCBCR)
5	524W5-12091		GROMMET	ｸﾞﾛﾒｯﾄ	2	(WITHOUT SCB001,SCBCR)
6	239A5-12401		RUBBER,WEIGHT,RH	ﾗﾊﾞｰ	1	(WITHOUT SCB001,SCBCR)
7	239A5-12411		RUBBER,WEIGHT,LH	ﾗﾊﾞｰ	1	(WITHOUT SCB001,SCBCR)
8	230C1-02041		COVER,AIR-INTAKE	ｶﾊﾞｰ	1	(WITHOUT CAKB,SCB001,SCBCR)
9	01186-12025		BOLT	ﾎﾞﾙﾄ	4	(WITHOUT SCB001,SCBCR)
10	27662-62721		GROMMET	ｸﾞﾛﾒｯﾄ	2	(WITHOUT SCB001,SCBCR)

FIG.118 REAR PIPE [EXB][EXC][EXE][EXK][EXN]

(F6025140) ﾘﾔｰﾊﾟｲﾌﾟ

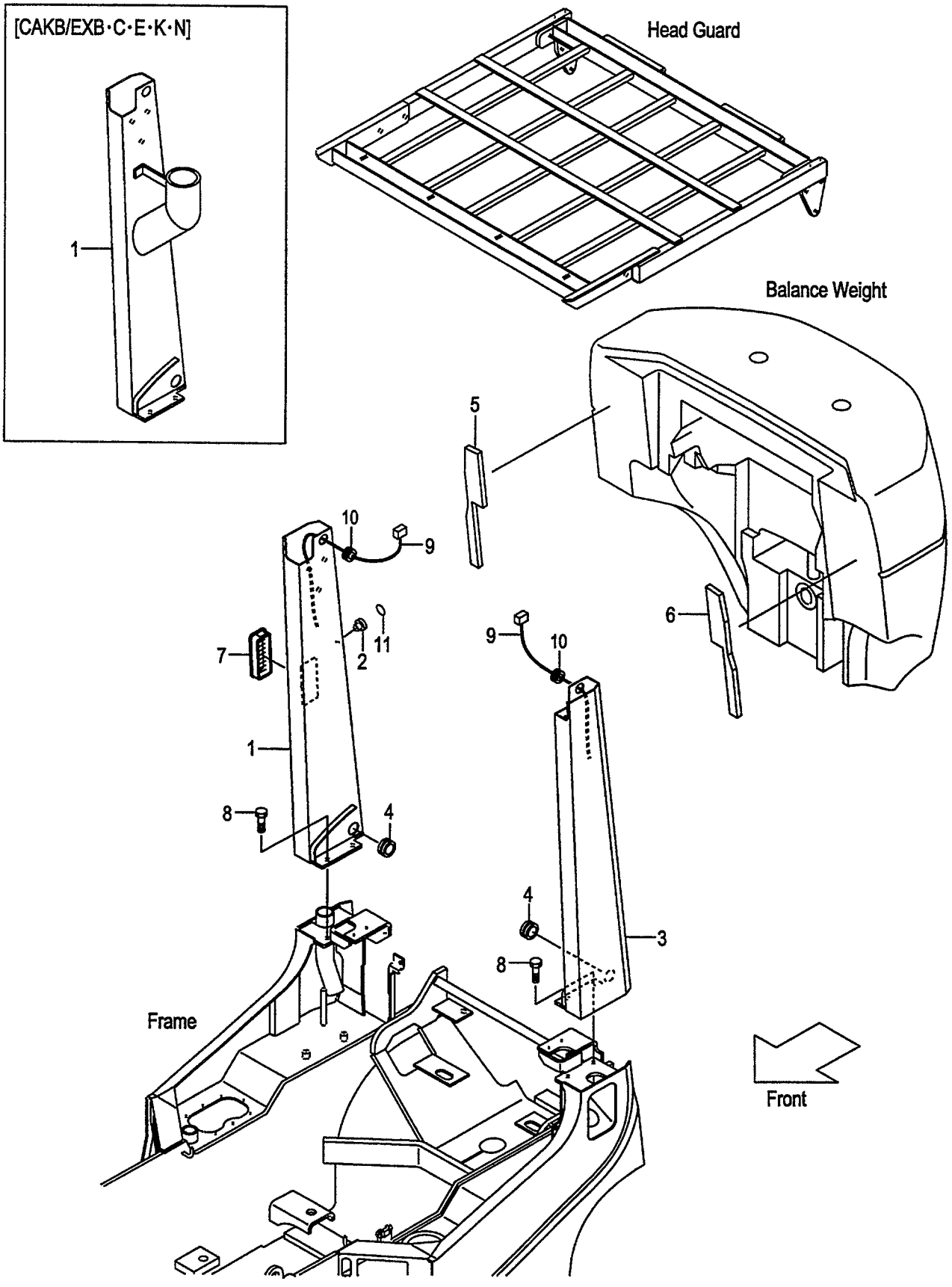

A:FD20C7 FD20T7 FD25C7 FD25T7

Item No	Part No.	Mark	Description		Req'd	Remarks : Serial No.
A1	539A2-80111		PIPE-ASSY,REAR,RH	ﾘﾔｰﾊﾟｲﾌﾟｱｯｾﾝ	1	[EXB][EXC][EXE][EXK] INC.1,2
-	539A2-60111		PIPE-ASSY,REAR,RH	ﾘﾔｰﾊﾟｲﾌﾟｱｯｾﾝ	1	[EXN] INC.1,2
-	518G2-80101		PIPE-ASSY,REAR,RH	ﾘﾔｰﾊﾟｲﾌﾟｱｯｾﾝ	1	[HGL/EXB&C&E&K&N] INC.1,2
-	539A2-80151		PIPE-ASSY,REAR,RH	ﾘﾔｰﾊﾟｲﾌﾟｱｯｾﾝ	1	[HGH100/EXB&C&E&K&N] INC.1,2
-	539A2-80161		PIPE-ASSY,REAR,RH	ﾘﾔｰﾊﾟｲﾌﾟｱｯｾﾝ	1	[HGH200/EXB&C&E&K&N] INC.1,2
-	539C0-90051		PIPE-ASSY,REAR,RH	ﾘﾔｰﾊﾟｲﾌﾟｱｯｾﾝ	1	[CAKB/EXB&C&E&K] INC.1,2
-	539C0-90061		PIPE-ASSY,REAR,RH	ﾘﾔｰﾊﾟｲﾌﾟｱｯｾﾝ	1	[CAKB/EXN] INC.1,2
-	518G0-90211		PIPE-ASSY,REAR,RH	ﾘﾔｰﾊﾟｲﾌﾟｱｯｾﾝ	1	[CAKB/HGL/EXB&C&E&K&N] INC.1,2
1	NO PART NO.	#	PIPE,REAR,RH	ﾊﾟｲﾌﾟ	1	[EXB][EXC][EXE][EXK]
-	NO PART NO.	#	PIPE,REAR,RH	ﾊﾟｲﾌﾟ	1	[EXN]
-	NO PART NO.	#	PIPE,REAR,RH	ﾊﾟｲﾌﾟ	1	[HGL/EXB&C&E&K&N]
-	NO PART NO.	#	PIPE,REAR,RH	ﾊﾟｲﾌﾟ	1	[HGH100/EXB&C&E&K&N]
-	NO PART NO.	#	PIPE,REAR,RH	ﾊﾟｲﾌﾟ	1	[HGH200/EXB&C&E&K&N]
-	NO PART NO.	#	PIPE,REAR,RH	ﾊﾟｲﾌﾟ	1	[CAKB/EXB&C&E&K]
-	NO PART NO.	#	PIPE,REAR,RH	ﾊﾟｲﾌﾟ	1	[CAKB/EXN]
-	NO PART NO.	#	PIPE,REAR,RH	ﾊﾟｲﾌﾟ	1	[CAKB/HGL/EXB&C&E&K&N]
2	514A5-12011		RIVET,POP	ﾘﾍﾞｯﾄ	1	[EXB][EXC][EXE][EXK][EXN]
3	539A2-80221		PIPE,REAR,LH	ﾊﾟｲﾌﾟ	1	[EXB][EXC][EXE][EXK]
-	539A2-60221		PIPE,REAR,LH	ﾊﾟｲﾌﾟ	1	[EXN]
-	518G2-80121		PIPE,REAR,LH	ﾊﾟｲﾌﾟ	1	[HGL/EXB&C&E&K&N]
-	539A2-80371		PIPE,REAR,LH	ﾊﾟｲﾌﾟ	1	[HGH100/EXB&C&E&K&N]
-	539A2-80571		PIPE,REAR,LH	ﾊﾟｲﾌﾟ	1	[HGH200/EXB&C&E&K&N]
-	518G2-80121		PIPE,REAR,LH	ﾊﾟｲﾌﾟ	1	[CAKB/HGL/EXB&C&E&K&N]
4	524W5-12091		GROMMET	ｸﾞﾛﾒｯﾄ	2	[EXB][EXC][EXE][EXK][EXN]
5	239A5-12401		RUBBER,WEIGHT,RH	ﾗﾊﾞｰ	1	[EXB][EXC][EXE][EXK][EXN]
6	239A5-12411		RUBBER,WEIGHT,LH	ﾗﾊﾞｰ	1	[EXB][EXC][EXE][EXK][EXN]
7	230C1-02041		COVER,AIR-INTAKE	ｶﾊﾞｰ	1	[EXB][EXC][EXE][EXK][EXN] (WITHOUT CAKB/EX)
8	01186-12025		BOLT	ﾎﾞﾙﾄ	4	[EXB][EXC][EXE][EXK][EXN]
9	514T2-72061		WIRE-HARNESS,R-COMB.	ﾜｲﾔﾊｰﾈｽ	2	[EXB][EXC][EXE][EXK][EXN]
10	22679-47301		GROMMET	ｸﾞﾛﾒｯﾄ	2	[EXB][EXC][EXE][EXK][EXN]
11	539A2-82251		SEAL,COVER	ｼｰﾙ	1	[EXB][EXC][EXE][EXK][EXN]

FIG.119 REAR PIPE [RW]

(F60251A0) ﾘﾔｰﾊﾟｲﾌﾟ

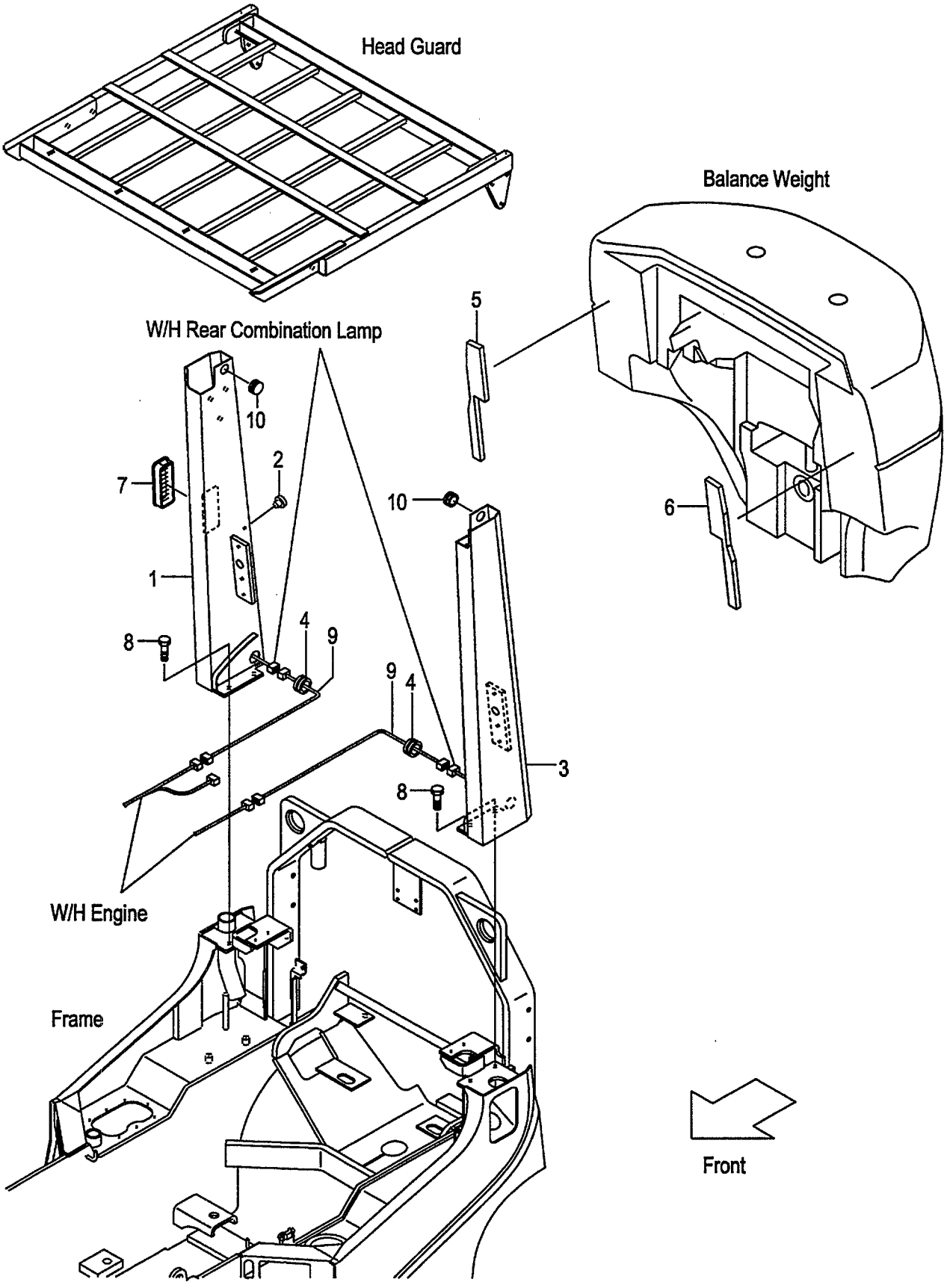

FIG.119
(F60251A0)

A:FD25C7 FD25T7 FD25W7

Item No	Part No.	Mark	Description		Req'd	Remarks : Serial No.
A1	539C1-90101		PIPE-ASSY,REAR,RH	ﾘﾔｰﾊﾟｲﾌﾟｱｯｾﾝ	1	[RW] INC.1,2
1	NO PART NO.	#	PIPE,REAR,RH	ﾊﾟｲﾌﾟ	1	[RW]
2	514A5-12011		RIVET,POP	ﾘﾍﾞｯﾄ	1	[RW]
3	539C1-90211		PIPE,REAR,LH	ﾊﾟｲﾌﾟ	1	[RW]
4	524W5-12091		GROMMET	ｸﾞﾛﾒｯﾄ	2	[RW]
5	239A5-12401		RUBBER,WEIGHT,RH	ﾗﾊﾞｰ	1	[RW]
6	239A5-12411		RUBBER,WEIGHT,LH	ﾗﾊﾞｰ	1	[RW]
7	230C1-02041		COVER,AIR-INTAKE	ｶﾊﾞｰ	1	[RW]
8	01186-12025		BOLT	ﾎﾞﾙﾄ	4	[RW]
9	229F2-42141		WIRE-HARNESS,R-COMB.	ﾜｲﾔﾊｰﾈｽ	2	[RW]
10	27662-62721		GROMMET	ｸﾞﾛﾒｯﾄ	2	[RW]

FIG.120 FRONT LAMP BRACKET

(F6025150) フロントランプブラケット

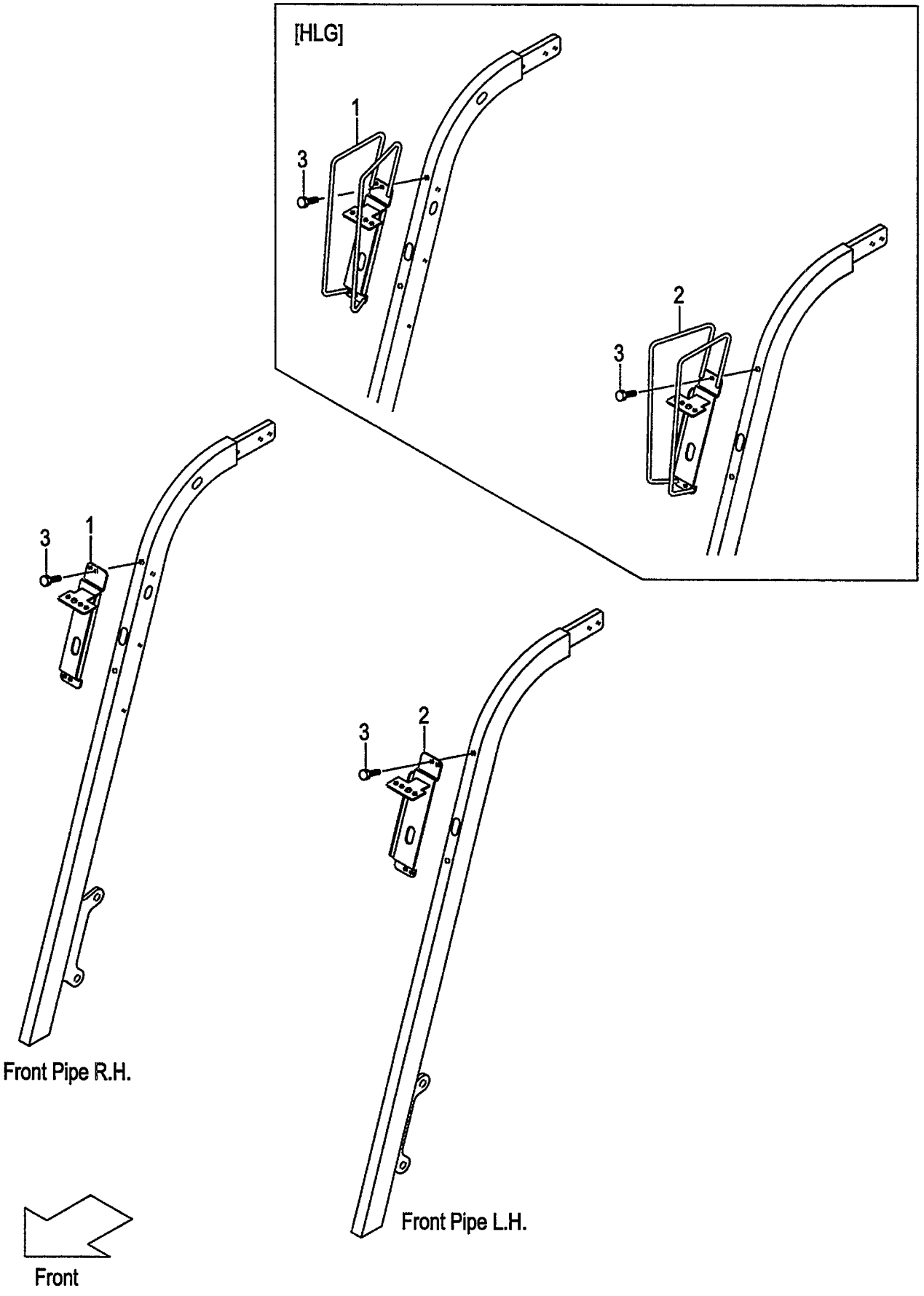

FIG.120
(F6025150)

A:FD20C18 FD20T18 FD25C18 FD25T18
B:FD20C7 FD20T7 FD25C7 FD25T7 FD20W7 FD25W7

Item No	Part No.	Mark	Description	Req'd	Remarks : Serial No.
1	239A5-12501		BRACKET,HEAD-LAMP,RH ﾌﾞﾗｹｯﾄ	1	(WITHOUT SCB001,SCBCR)
-	539A5-12041		BRACKET,HEAD-LAMP,RH ﾌﾞﾗｹｯﾄ	1	[HLG]
2	239A5-12521		BRACKET,HEAD-LAMP,LH ﾌﾞﾗｹｯﾄ	1	(WITHOUT SCB001,SCBCR)
-	539A5-12011		BRACKET,HEAD-LAMP,LH ﾌﾞﾗｹｯﾄ	1	[HLG]
3	01183-08016		BOLT ﾎﾞﾙﾄ	4	(WITHOUT SCB001,SCBCR)

FIG.121 FRONT LAMP BRACKET [HL][BKH]

(F60251B0) フロントランプブラケット

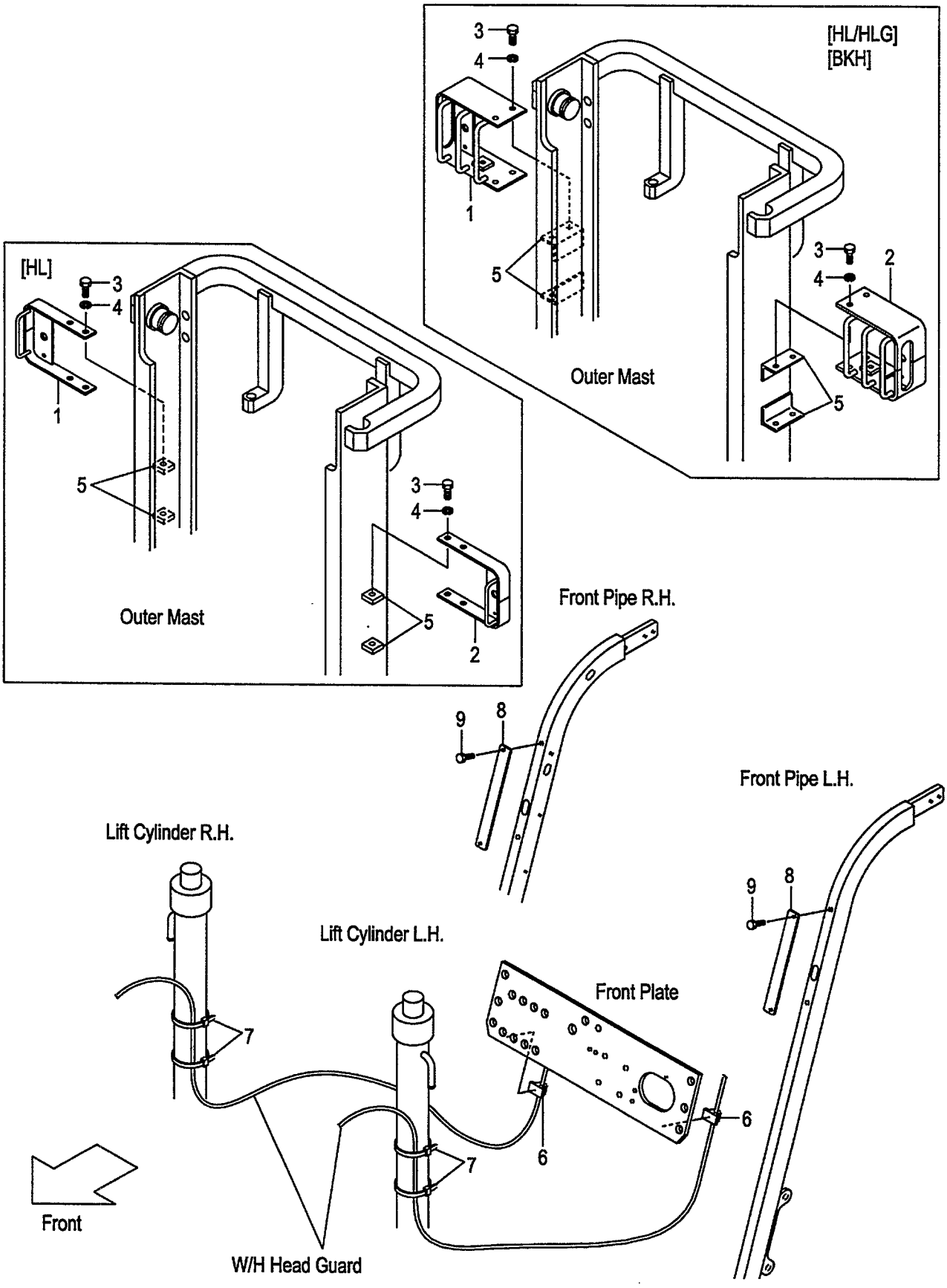

FIG.121
(F60251B0)

A:FD20C18 FD20T18 FD25C18 FD25T18
B:FD20C7 FD20T7 FD25C7 FD25T7 FD20W7 FD25W7

Item No	Part No.	Mark	Description	Req'd	Remarks : Serial No.
1	534A9-22001		BRACKET,HEAD-LAMP,RH ﾌﾞﾗｹｯﾄ	1	[HL]
-	534A4-22001		BRACKET,HEAD-LAMP,RH ﾌﾞﾗｹｯﾄ	1	[HL/HLG][BKH]
2	534A9-22011		BRACKET,HEAD-LAMP,LH ﾌﾞﾗｹｯﾄ	1	[HL]
-	534A4-22011		BRACKET,HEAD-LAMP,LH ﾌﾞﾗｹｯﾄ	1	[HL/HLG][BKH]
3	01100-12020		BOLT ﾎﾞﾙﾄ	4	[HL][HL/HLG][BKH]
4	02010-00012		WASHER ﾜｯｼｬ	4	[HL][HL/HLG][BKH]
5	534A9-22101		PLATE,TAPPED ﾌﾟﾚｰﾄ	4	[HL]
-	534A4-22101		BRACKET ﾌﾞﾗｹｯﾄ	4	[HL/HLG][BKH]
6	27732-42221		CLAMP,HARNESS ｸﾗﾝﾌﾟ	2	[HL][HL/HLG][BKH]
7	04913-11380		BAND,INSHULOCK ﾊﾞﾝﾄﾞ	4	[HL][HL/HLG][BKH]
8	534A9-22301		PLATE ﾌﾟﾚｰﾄ	2	[HL][HL/HLG][BKH]
9	01183-08016		BOLT ﾎﾞﾙﾄ	4	[HL][HL/HLG][BKH]

FIG.122 REAR LAMP BRACKET

(F6025160) リヤーランプブラケット

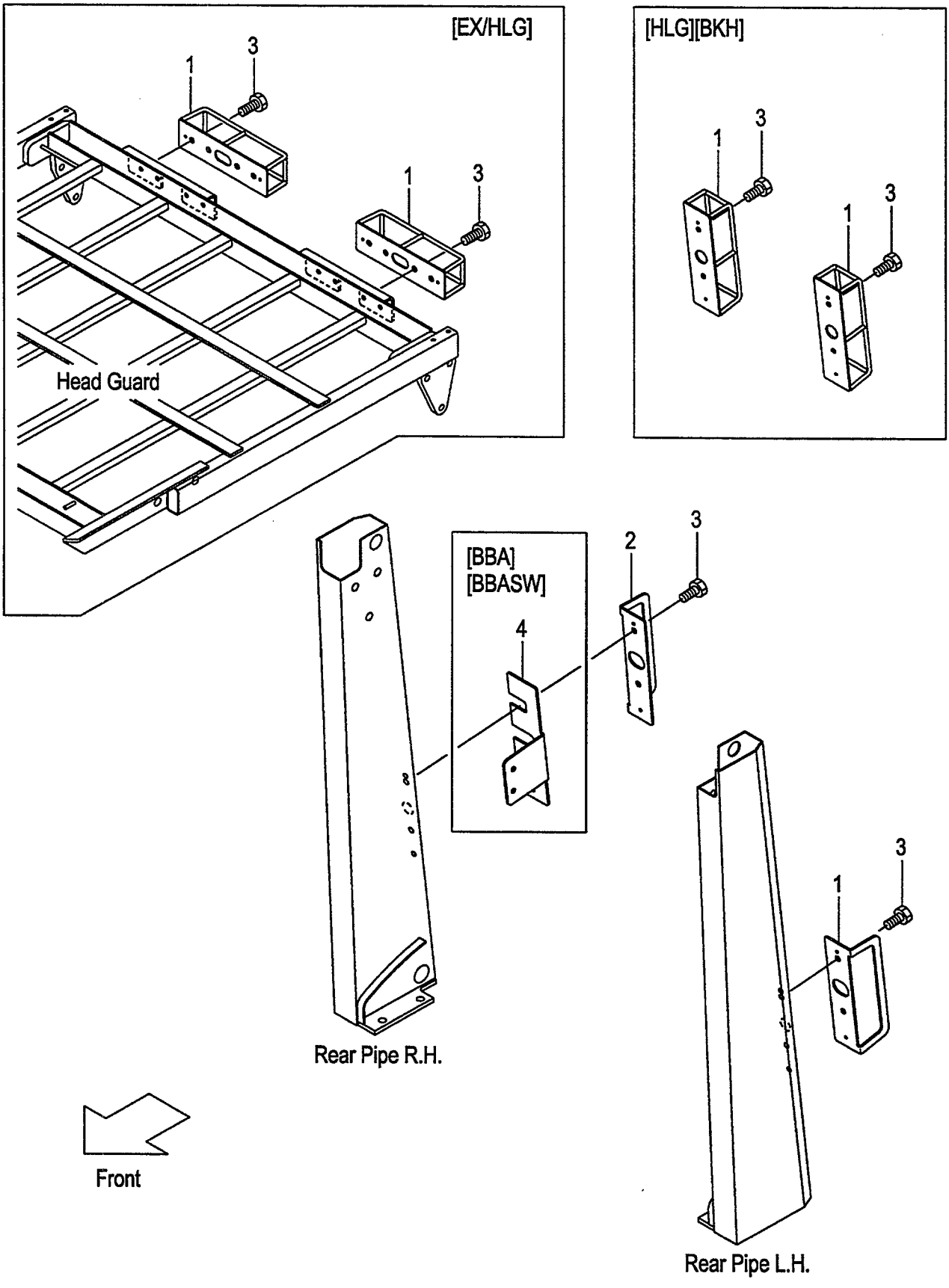

A:FD20C18 FD20T18 FD25C18 FD25T18
B:FD20C7 FD20T7 FD25C7 FD25T7
C:FD20W7 FD25W7

FIG.122
(F6025160)

Item No	Part No.	Mark	Description		Req'd	Remarks : Serial No.
1	534A5-12321		GUARD,REAR-LAMP,LH	ｶﾞｰﾄﾞ	1	(WITHOUT EX)
-	524W5-13351		GUARD,REAR-LAMP	ｶﾞｰﾄﾞ	2	[HLG][BKH]
-	539A5-12101		GUARD,REAR-LAMP	ｶﾞｰﾄﾞ	2	B [EX/HLG]
2	534A5-12331		GUARD,REAR-LAMP,RH	ｶﾞｰﾄﾞ	1	(WITHOUT EX,HLG,BKH)
3	01183-08016		BOLT	ﾎﾞﾙﾄ	4	(WITHOUT EX)
-	01183-08016		BOLT	ﾎﾞﾙﾄ	8	B [EX/HLG]
4	539A1-32001		BRACKET	ﾌﾞﾗｹｯﾄ	1	[BBA][BBASW]

FIG.123 HEAD GUARD PARTS

(F6025170) ﾍｯﾄﾞｶﾞｰﾄﾞﾊﾟｰﾂ

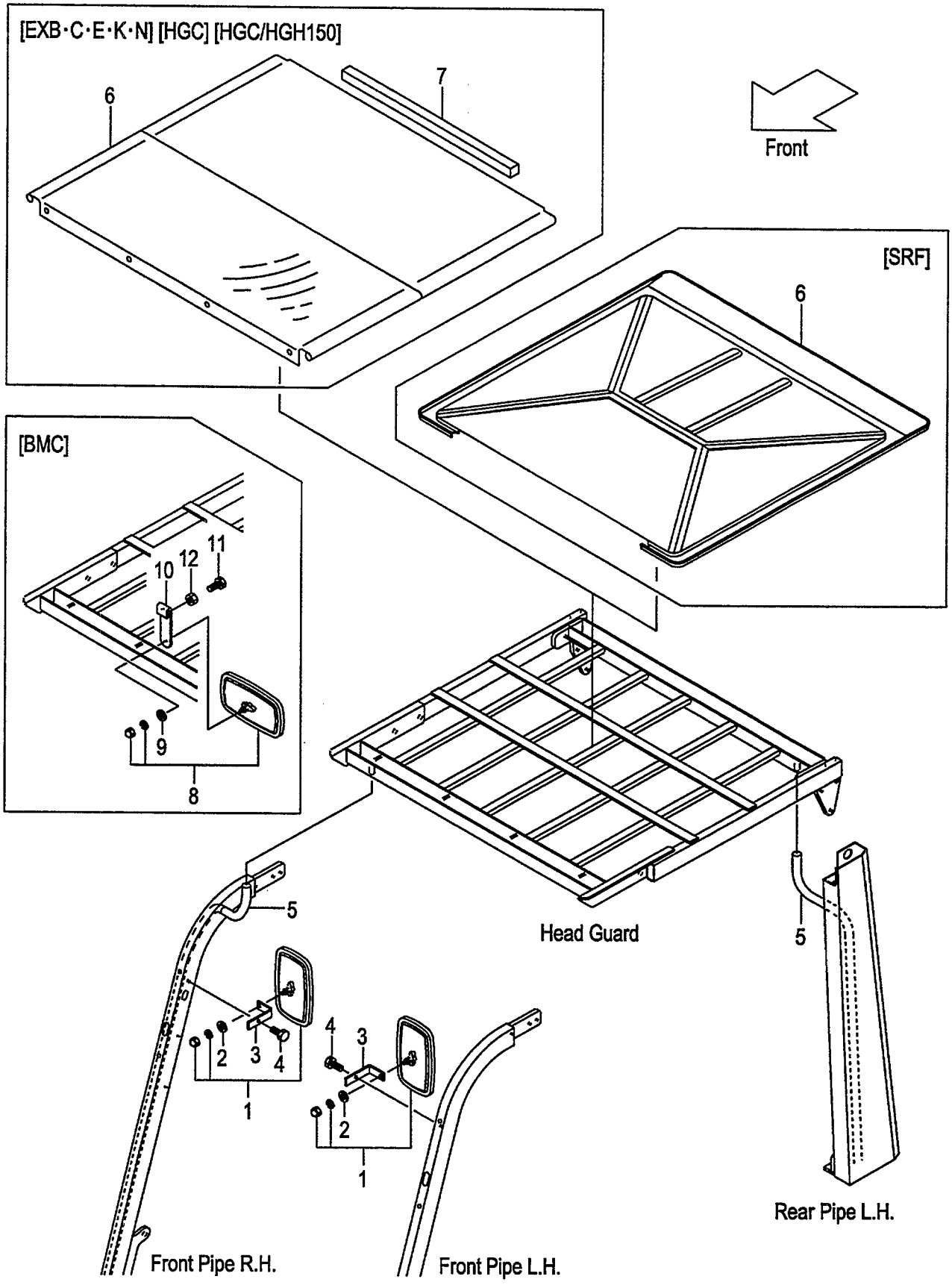

A:FD20C18 FD20T18 FD25C18 FD25T18
B:FD20C7 FD20T7 FD25C7 FD25T7
C:FD20W7 FD25W7

FIG.123
(F6025170)

Item No	Part No.	Mark	Description		Req'd	Remarks : Serial No.
1	239A9-92001		MIRROR	ミラー	2	
2	222A9-32011		WASHER	ワッシャ	2	
3	534A5-12571		BRACKET,BACK-MIRROR	ブラケット	2	
4	514A5-12021		BOLT	ボルト	2	
5	516G5-12511		HOSE,VINYL	ホース	2	A
-	534A5-00401		HOSE,VINYL	ホース	2	B,C
-	516M5-12311		HOSE,VINYL	ホース	2	B
						[EXN]
-	516G5-12511		HOSE,VINYL	ホース	2	B,C
						[HGL]
-	534A5-00401		HOSE,VINYL	ホース	2	A
						[HGH]
-	516M5-12311		HOSE,VINYL	ホース	2	B,C
						[HGH060]
-	534A5-00411		HOSE,VINYL	ホース	2	B,C
						[HGH150]
6	539A5-12001		CANVAS	キャンバス	1	B
						[EXB][EXC][EXE][EXK][EXN]
						(WITHOUT HGCZZZ/EX)
-	539A5-10501		ROOF,SUN	ルーフ	1	[SRF]
-	539A5-12001		CANVAS	キャンバス	1	[HGC]
-	539A5-00261		CANVAS	キャンバス	1	B,C
						[HGC/HGH150]
7	516G5-13511		SUPPORTER	サポータ	1	B
						[EXB][EXC][EXE][EXK][EXN]
						(WITHOUT HGCZZZ/EX)
-	516G5-13511		SUPPORTER	サポータ	1	[HGC]
-	516G5-13511		SUPPORTER	サポータ	1	B,C
						[HGC/HGH150]
8	239A9-92001		MIRROR	ミラー	1	[BMC]
9	222A9-32011		WASHER	ワッシャ	1	[BMC]
10	539A9-32001		BRACKET,BACK-MIRROR	ブラケット	1	[BMC]
11	01100-08025		BOLT	ボルト	2	[BMC]
12	01402-00008		NUT	ナット	2	[BMC]

FIG.124 ACCEL PEDAL

(F6025220) アクセルペダル

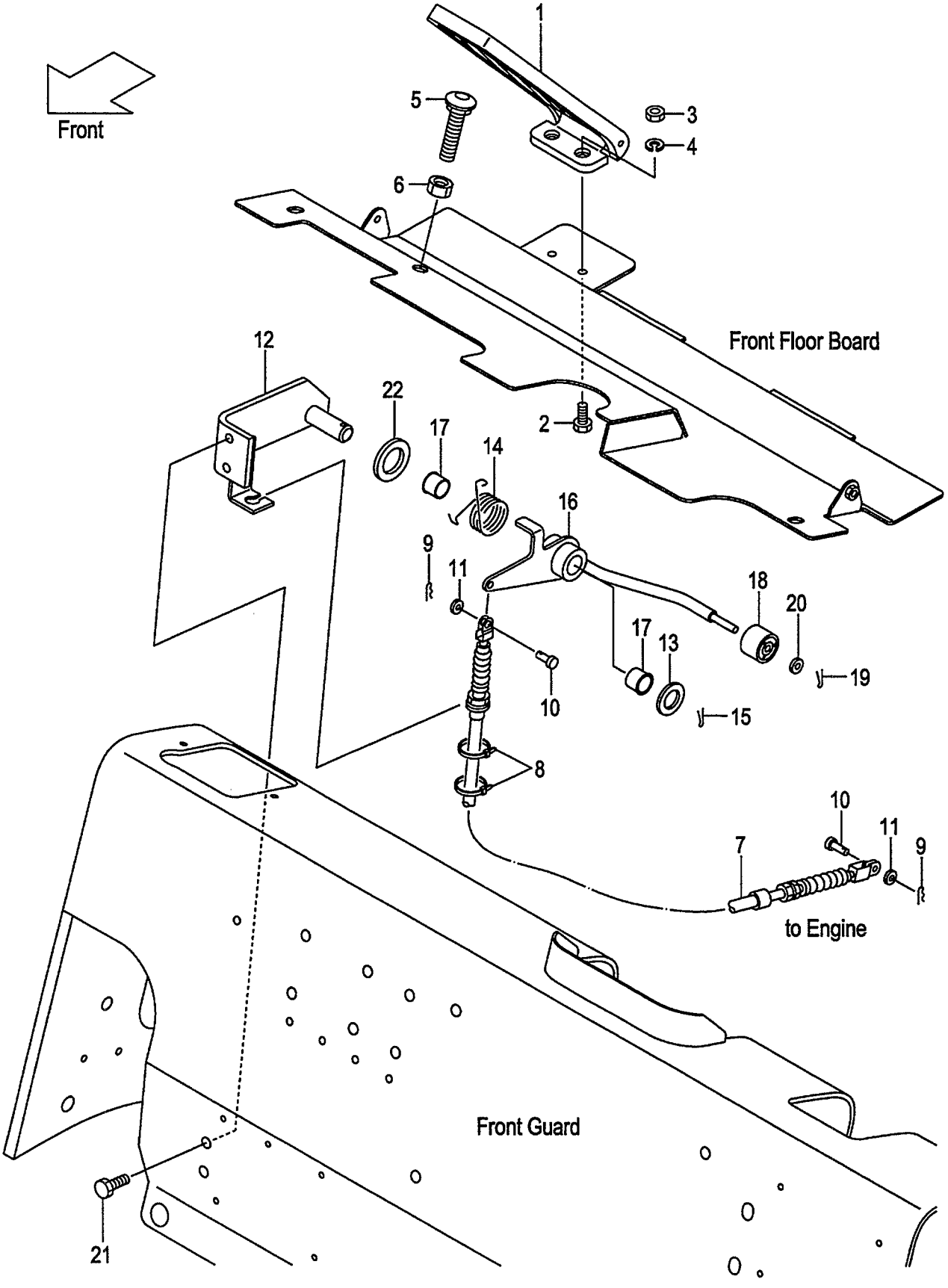

A:FD20C7 FD20T7 FD25C7 FD25T7 FD20W7 FD25W7

Item No	Part No.	Mark	Description		Req'd	Remarks : Serial No.
1	214A5-22051		PEDAL,ACCEL	ﾍﾟﾀﾞﾙ	1	
2	01100-06012		BOLT	ﾎﾞﾙﾄ	2	
3	01400-00006		NUT	ﾅｯﾄ	2	
4	02010-00006		WASHER	ﾜｯｼｬ	2	
5	216G5-22101		BOLT,CAP-SQUARE-NECK	ﾎﾞﾙﾄ	1	
6	01400-00012		NUT	ﾅｯﾄ	1	
7	242F5-22001		WIRE,ACCEL	ﾜｲﾔ	1	
8	27042-42312		BAND,CABLE	ﾊﾞﾝﾄﾞ	2	
9	216G5-22081		PIN,SNAP	ﾋﾟﾝ	2	
10	02262-06015		PIN,CLEVIS	ﾋﾟﾝ	2	
11	02000-00006		WASHER	ﾜｯｼｬ	2	
12	239A5-20402		BRACKET,ACCEL-LINK	ﾌﾞﾗｹｯﾄ	1	
13	02000-00016		WASHER	ﾜｯｼｬ	1	
14	239A5-22253		SPRING	ｽﾌﾟﾘﾝｸﾞ	1	
15	02200-04025		PIN,COTTER	ﾋﾟﾝ	1	
A1	239A5-20302		LINK-ASSY,ACCEL	ｱｸｾﾙﾘﾝｸｱｯｾﾝ	1	INC.16-20
16	NO PART NO.	#	LINK,ACCEL	ﾘﾝｸ	1	
17	214A7-42071		BUSHING	ﾌﾞｯｼﾝｸﾞ	2	
18	214A5-22001		ROLLER	ﾛｰﾗ	1	
19	02200-16010		PIN,COTTER	ﾋﾟﾝ	1	
20	02000-00006		WASHER	ﾜｯｼｬ	1	
21	01183-08016		BOLT	ﾎﾞﾙﾄ	2	
22	239A5-22151		WASHER	ﾜｯｼｬ	1	

FIG.125 ACCEL PEDAL

(F6025230) アクセルペダル

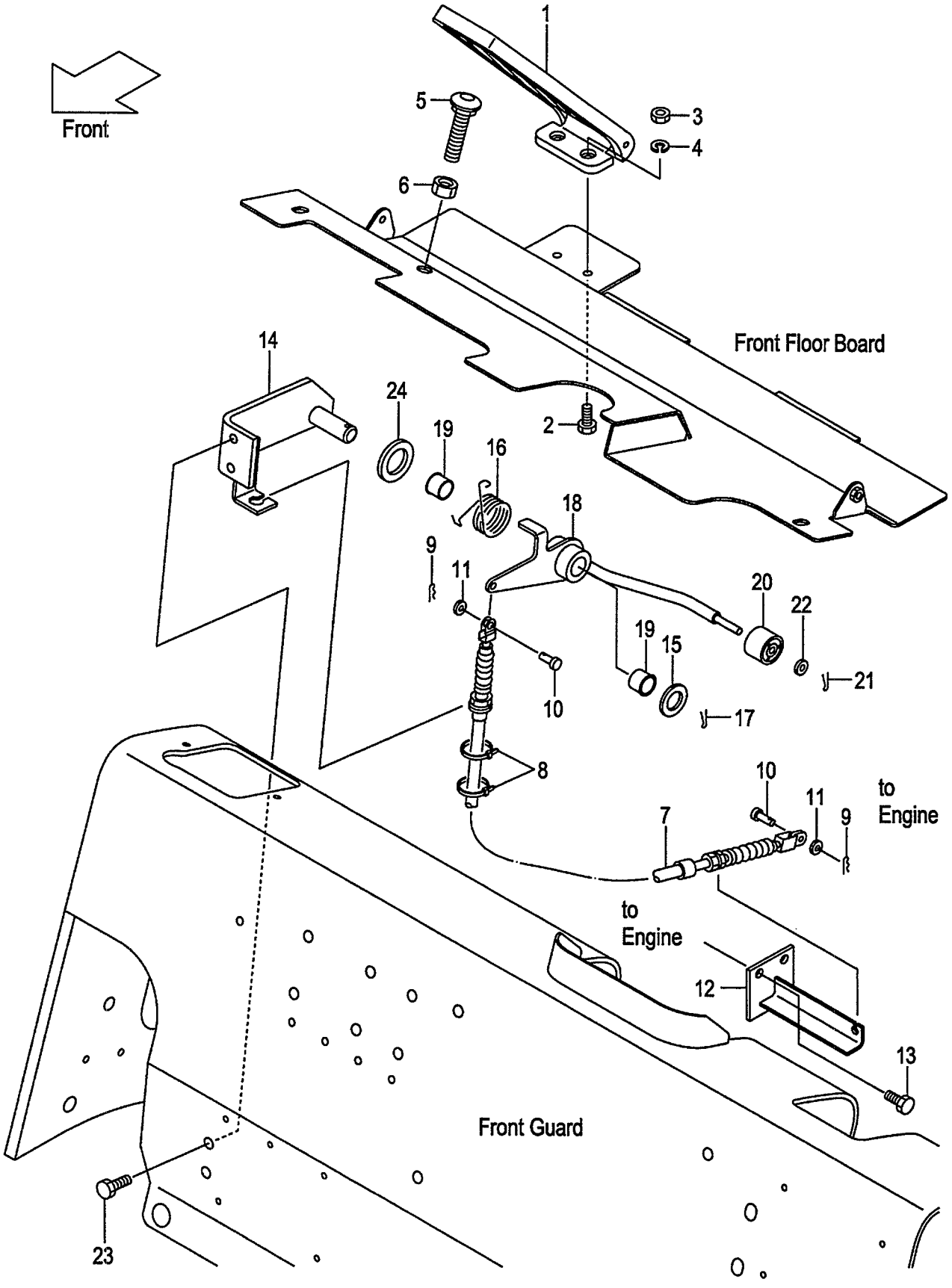

FIG.125
(F6025230)

A:FD20C18 FD20T18 FD25C18 FD25T18

Item No	Part No.	Mark	Description		Req'd	Remarks : Serial No.
1	214A5-22051		PEDAL,ACCEL	ﾍﾟﾀﾞﾙ	1	
2	01100-06012		BOLT	ﾎﾞﾙﾄ	2	
3	01400-00006		NUT	ﾅｯﾄ	2	
4	02010-00006		WASHER	ﾜｯｼｬ	2	
5	216G5-22101		BOLT,CAP-SQUARE-NECK	ﾎﾞﾙﾄ	1	
6	01400-00012		NUT	ﾅｯﾄ	1	
7	239A5-22101		WIRE,ACCEL	ﾜｲﾔ	1	
8	27042-42312		BAND,CABLE	ﾊﾞﾝﾄﾞ	2	
9	216G5-22081		PIN,SNAP	ﾋﾟﾝ	2	
10	02262-06015		PIN,CLEVIS	ﾋﾟﾝ	2	
11	02000-00006		WASHER	ﾜｯｼｬ	2	
12	241G5-22001		BRACKET,ACCEL-CABLE	ﾌﾞﾗｹｯﾄ	1	
13	01186-08020		BOLT	ﾎﾞﾙﾄ	2	
14	239A5-20402		BRACKET,ACCEL-LINK	ﾌﾞﾗｹｯﾄ	1	
15	02000-00016		WASHER	ﾜｯｼｬ	1	
16	239A5-22253		SPRING	ｽﾌﾟﾘﾝｸﾞ	1	
17	02200-04025		PIN,COTTER	ﾋﾟﾝ	1	
A1	239A5-20302		LINK-ASSY,ACCEL	ｱｸｾﾙﾘﾝｸｱｯｾﾝ	1	INC.18-22
18	NO PART NO.	#	LINK,ACCEL	ﾘﾝｸ	1	
19	214A7-42071		BUSHING	ﾌﾞｯｼﾝｸﾞ	2	
20	214A5-22001		ROLLER	ﾛｰﾗ	1	
21	02200-16010		PIN,COTTER	ﾋﾟﾝ	1	
22	02000-00006		WASHER	ﾜｯｼｬ	1	
23	01183-08016		BOLT	ﾎﾞﾙﾄ	2	
24	239A5-22151		WASHER	ﾜｯｼｬ	1	

FIG.126 FOOT PEDAL (CLUTCH)

(F6025410) ﾌｯﾄﾍﾟﾀﾞﾙ

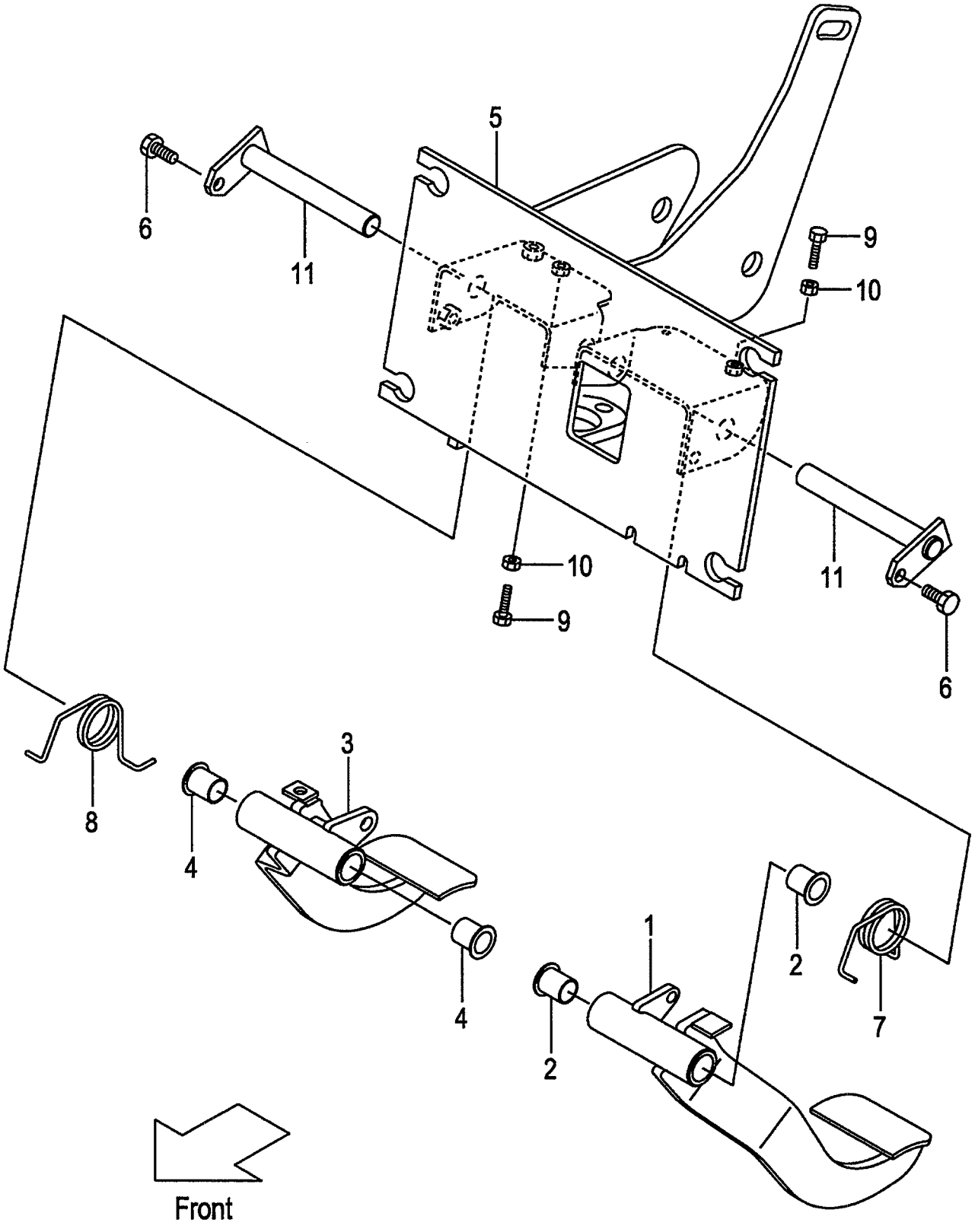

A:FD20C18 FD25C18
B:FD20C7 FD25C7

FIG.126
(F6025410)

Item No	Part No.	Mark	Description		Req'd	Remarks : Serial No.
A1	238F5-40071		PEDAL-ASSY,CLUTCH	ｸﾗｯﾁﾍﾟﾀﾞﾙｱｯｾﾝ	1	INC.1,2
1	NO PART NO.	#	PEDAL,CLUTCH	ﾍﾟﾀﾞﾙ	1	
2	239B5-42221		BUSHING	ﾌﾞｯｼﾝｸﾞ	2	
A2	238F5-40061		PEDAL-ASSY,BRAKE	ﾌﾞﾚｰｷﾍﾟﾀﾞﾙｱｯｾﾝ	1	INC.3,4
3	NO PART NO.	#	PEDAL,BRAKE	ﾍﾟﾀﾞﾙ	1	
4	239B5-42221		BUSHING	ﾌﾞｯｼﾝｸﾞ	2	
5	238F5-40202		BRACKET,PEDAL	ﾌﾞﾗｹｯﾄ	1	
6	01186-08016		BOLT	ﾎﾞﾙﾄ	2	
7	239B5-42201		SPRING	ｽﾌﾟﾘﾝｸﾞ	1	
8	239B5-42211		SPRING	ｽﾌﾟﾘﾝｸﾞ	1	
9	01120-08035		BOLT	ﾎﾞﾙﾄ	2	
10	01402-00008		NUT	ﾅｯﾄ	2	
11	238F5-40501		SHAFT	ｼｬﾌﾄ	2	

FIG.127 FOOT PEDAL (CLUTCH):[PC]

(F6025450) ﾌｯﾄﾍﾟﾀﾞﾙ

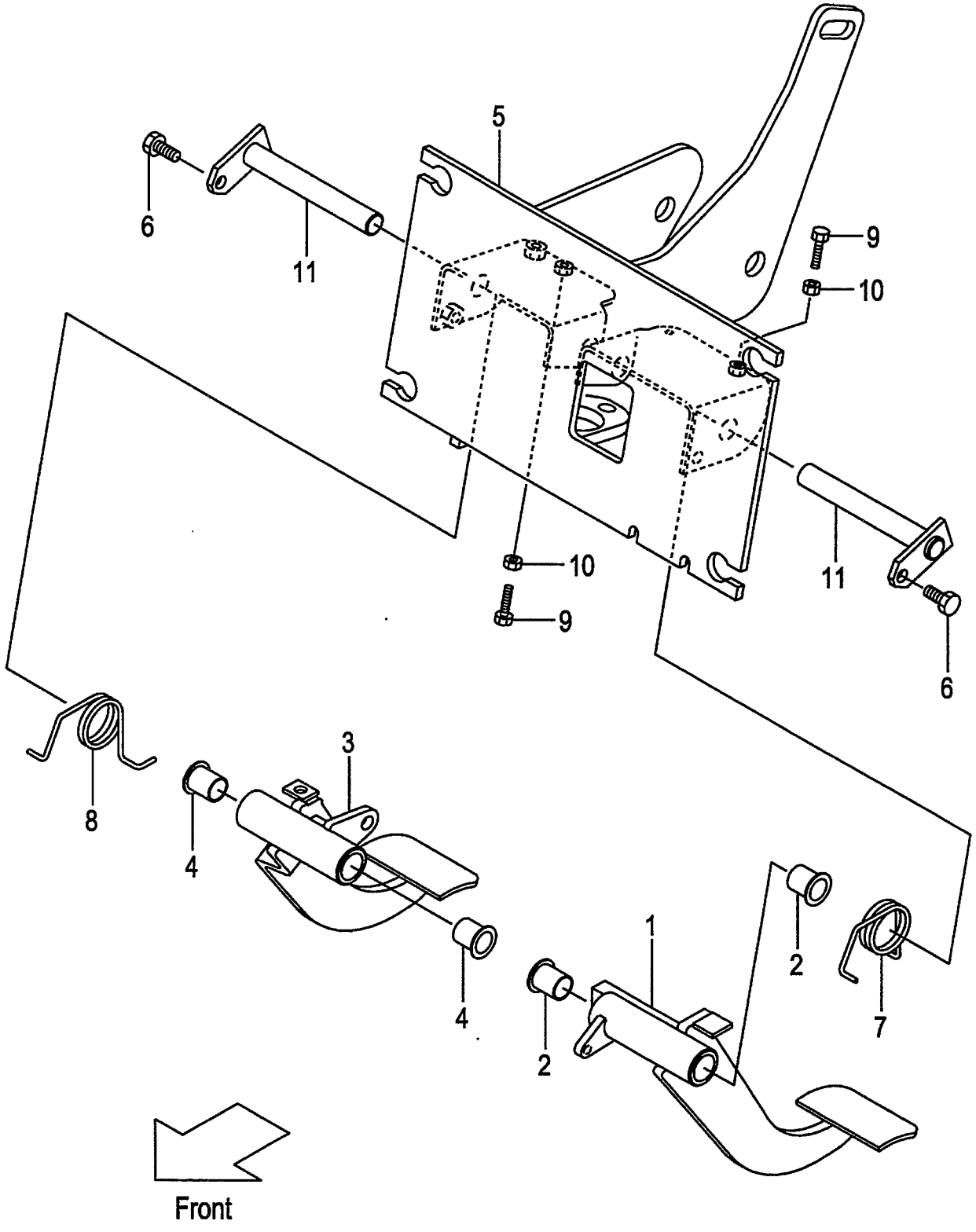

A:FD20C18 FD25C18
B:FD20C7 FD25C7

FIG.127
(F6025450)

Item No	Part No.	Mark	Description		Req'd	Remarks : Serial No.
A1	239H5-40411		PEDAL-ASSY,INCHING	ｲﾝﾁﾝｸﾞﾍﾟﾀﾞﾙｱｯｾﾝ	1	[PC] INC.1,2
1	NO PART NO.	#	PEDAL,INCHING	ﾍﾟﾀﾞﾙ	1	[PC]
2	239B5-42221		BUSHING	ﾌﾞｯｼﾝｸﾞ	2	[PC]
A2	238F5-40061		PEDAL-ASSY,BRAKE	ﾌﾞﾚｰｷﾍﾟﾀﾞﾙｱｯｾﾝ	1	[PC] INC.3,4
3	NO PART NO.	#	PEDAL,BRAKE	ﾍﾟﾀﾞﾙ	1	[PC]
4	239B5-42221		BUSHING	ﾌﾞｯｼﾝｸﾞ	2	[PC]
5	238S5-40202		BRACKET,PEDAL	ﾌﾞﾗｹｯﾄ	1	[PC]
6	01186-08016		BOLT	ﾎﾞﾙﾄ	2	[PC]
7	239B5-42201		SPRING	ｽﾌﾟﾘﾝｸﾞ	1	[PC]
8	239B5-42211		SPRING	ｽﾌﾟﾘﾝｸﾞ	1	[PC]
9	01120-08035		BOLT	ﾎﾞﾙﾄ	2	[PC]
10	01402-00008		NUT	ﾅｯﾄ	2	[PC]
11	238F5-40501		SHAFT	ｼｬﾌﾄ	2	[PC]

FIG.128 FOOT PEDAL (TOR-CON)

(F60254A0) ﾌｯﾄﾍﾟﾀﾞﾙ

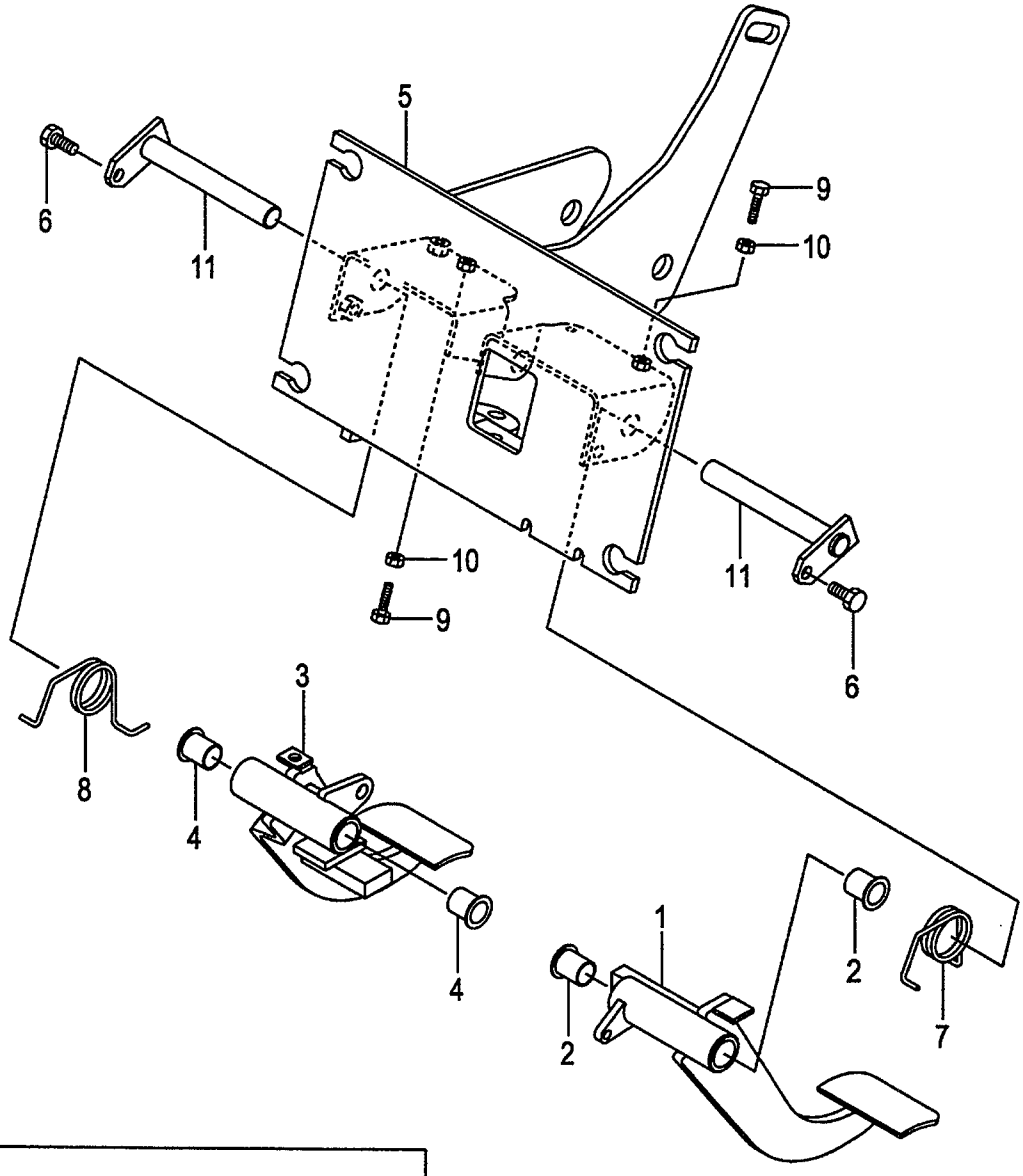

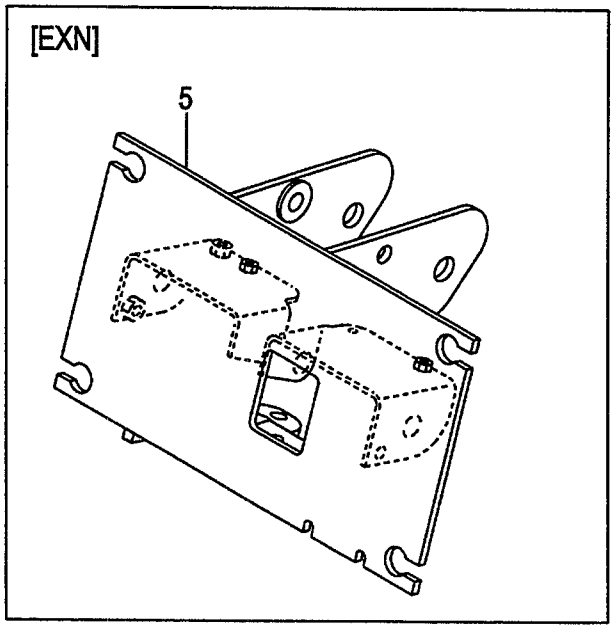

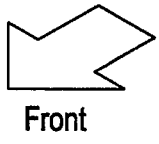

A:FD20T18 FD25T18
B:FD20T7 FD25T7

FIG.128
(F60254A0)

Item No	Part No.	Mark	Description		Req'd	Remarks : Serial No.
A1	238G5-40031		PEDAL-ASSY,INCHING	ｲﾝﾁﾝｸﾞﾍﾟﾀﾞﾙｱｯｾﾝ	1	INC.1,2
1	NO PART NO.	#	PEDAL,INCHING	ﾍﾟﾀﾞﾙ	1	
2	239B5-42221		BUSHING	ﾌﾞｯｼﾝｸﾞ	2	
A2	238G5-40021		PEDAL-ASSY,BRAKE	ﾌﾞﾚｰｷﾍﾟﾀﾞﾙｱｯｾﾝ	1	INC.3,4
3	NO PART NO.	#	PEDAL,BRAKE	ﾍﾟﾀﾞﾙ	1	
4	239B5-42221		BUSHING	ﾌﾞｯｼﾝｸﾞ	2	
5	238G5-40202		BRACKET,PEDAL	ﾌﾞﾗｹｯﾄ	1	
-	538G2-60202		BRACKET,PEDAL	ﾌﾞﾗｹｯﾄ	1	[EXN]
6	01186-08016		BOLT	ﾎﾞﾙﾄ	2	
7	239B5-42201		SPRING	ｽﾌﾟﾘﾝｸﾞ	1	
8	239B5-42211		SPRING	ｽﾌﾟﾘﾝｸﾞ	1	
9	01120-08035		BOLT	ﾎﾞﾙﾄ	2	
10	01402-00008		NUT	ﾅｯﾄ	2	
11	238F5-40501		SHAFT	ｼｬﾌﾄ	2	

FIG.129 FOOT PEDAL (OIL CLUTCH)

(F60254C0) ﾌｯﾄﾍﾟﾀﾞﾙ

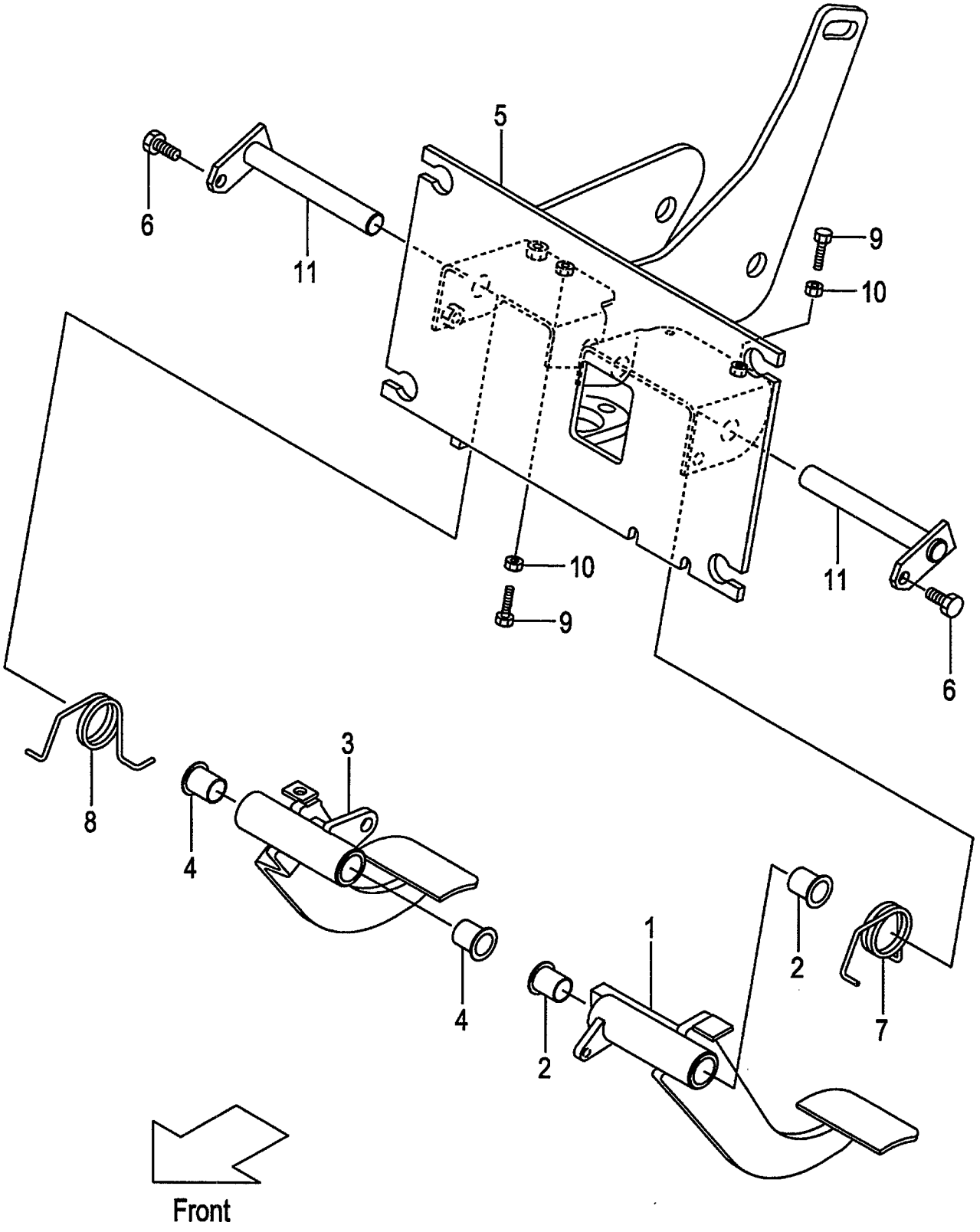

FIG.129
(F60254C0)

A:FD20W7 FD25W7

Item No	Part No.	Mark	Description		Req'd	Remarks : Serial No.
A1	239H5-40411		PEDAL-ASSY,INCHING	ｲﾝﾁﾝｸﾞﾍﾟﾀﾞﾙｱｯｾﾝ	1	INC.1,2
1	NO PART NO.	#	PEDAL,INCHING	ﾍﾟﾀﾞﾙ	1	
2	239B5-42221		BUSHING	ﾌﾞｯｼﾝｸﾞ	2	
A2	238F5-40061		PEDAL-ASSY,BRAKE	ﾌﾞﾚｰｷﾍﾟﾀﾞﾙｱｯｾﾝ	1	INC.3,4
3	NO PART NO.	#	PEDAL,BRAKE	ﾍﾟﾀﾞﾙ	1	
4	239B5-42221		BUSHING	ﾌﾞｯｼﾝｸﾞ	2	
5	238S5-40202		BRACKET,PEDAL	ﾌﾞﾗｹｯﾄ	1	
6	01186-08016		BOLT	ﾎﾞﾙﾄ	2	
7	239B5-42201		SPRING	ｽﾌﾟﾘﾝｸﾞ	1	
8	239B5-42211		SPRING	ｽﾌﾟﾘﾝｸﾞ	1	
9	01120-08035		BOLT	ﾎﾞﾙﾄ	2	
10	01402-00008		NUT	ﾅｯﾄ	2	
11	238F5-40501		SHAFT	ｼｬﾌﾄ	2	

FIG.130 FOOT PEDAL CYLINDER (CLUTCH)

(F6025420) ﾌｯﾄﾍﾟﾀﾞﾙｼﾘﾝﾀﾞ

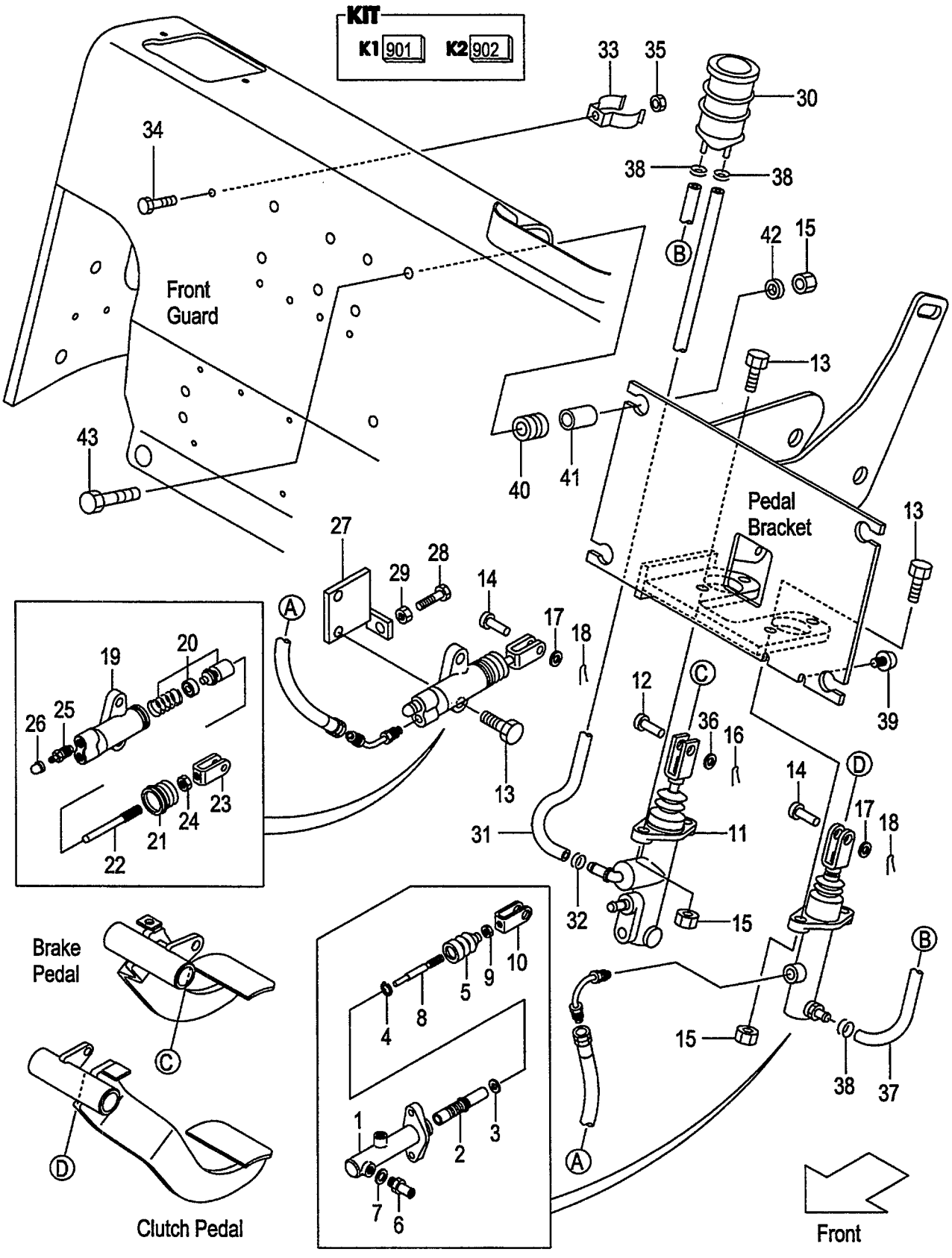

A:FD20C18 FD25C18
B:FD20C7 FD25C7

FIG.130
(F6025420)

Item No	Part No.	Mark	Description		Req'd	Remarks : Serial No.
A1	239A5-40501		CYL-ASSY,CLUTCH-MASTER	ｼﾘﾝﾀﾞｱｯｾﾝ	1	INC.1-10
901	216G5-32201	K1	KIT,REPAIR	ﾘﾍﾟｱｷｯﾄ	1	INC.2-5
1	NO PART NO.	#	BODY,CYL	ﾎﾞﾃﾞｨ	1	
2	NO PART NO.	#*	PISTON	ﾋﾟｽﾄﾝ	1	
3	216G5-32311	*	PLATE,PISTON-STOPPER	ﾌﾟﾚｰﾄ	1	
4	25595-42311	*	RING,SNAP	ｽﾅｯﾌﾟﾘﾝｸﾞ	1	
5	216G5-32321	*	BOOT	ﾌﾞｰﾂ	1	
6	216G5-32331		UNION	ﾕﾆｵﾝ	1	
7	216G5-32341		GASKET	ｶﾞｽｹｯﾄ	1	
8	NO PART NO.	#	ROD,PUSH	ﾛｯﾄﾞ	1	
9	01402-00008		NUT	ﾅｯﾄ	1	
10	25595-42452		CLEVIS	ｸﾚﾋﾞｽ	1	
11	239A5-40102		CYL,BRAKE-MASTER	ｼﾘﾝﾀﾞ	1	SEE FIG.139
12	02262-10030		PIN,CLEVIS	ﾋﾟﾝ	1	
13	01184-10030		BOLT	ﾎﾞﾙﾄ	6	
14	02262-08025		PIN,CLEVIS	ﾋﾟﾝ	2	
15	01400-00010		NUT	ﾅｯﾄ	8	
16	02200-32025		PIN,COTTER	ﾋﾟﾝ	1	
17	02000-00008		WASHER	ﾜｯｼｬ	2	
18	02200-02020		PIN,COTTER	ﾋﾟﾝ	2	
A2	214A5-32312		CYL-ASSY,CLUTCH-RELEASE	ｼﾘﾝﾀﾞｱｯｾﾝ	1	INC.19-26
902	214A5-33012	K2	KIT,REPAIR	ﾘﾍﾟｱｷｯﾄ	1	INC.20,21
19	NO PART NO.	#	BODY,CYL	ﾎﾞﾃﾞｨ	1	
20	NO PART NO.	#*	PISTON	ﾋﾟｽﾄﾝ	1	
21	NO PART NO.	#*	BOOT	ﾌﾞｰﾂ	1	
A3	214A5-33052		ROD-ASSY,PUSH	ﾌﾟｯｼｭﾛｯﾄﾞｱｯｾﾝ	1	INC.22-24
22	214A5-33062		ROD,PUSH	ﾛｯﾄﾞ	1	
23	25595-42452		CLEVIS	ｸﾚﾋﾞｽ	1	
24	01402-00008		NUT	ﾅｯﾄ	1	
25	214A5-33031		VALVE,BLEEDER	ﾊﾞﾙﾌﾞ	1	
26	214A5-33041		CAP,BLEEDER	ｷｬｯﾌﾟ	1	
27	214A5-32101		BRACKET,RELEASE-CYL	ﾌﾞﾗｹｯﾄ	1	
28	01100-10030		BOLT	ﾎﾞﾙﾄ	1	
29	01402-00010		NUT	ﾅｯﾄ	1	
30	216G5-42011		TANK,RESERVE	ﾀﾝｸ	1	
31	239A5-42411		HOSE,RESERVE	ﾎｰｽ	1	
32	25595-42491		CLIP,HOSE	ｸﾘｯﾌﾟ	1	
33	224G5-42061		CLIP,RESERVE-TANK	ｸﾘｯﾌﾟ	1	
34	239A5-42381		BOLT	ﾎﾞﾙﾄ	1	
35	01400-00006		NUT	ﾅｯﾄ	1	
36	02000-00010		WASHER	ﾜｯｼｬ	1	
37	239A5-42401		HOSE,RESERVE	ﾎｰｽ	1	
38	25785-43091		CLIP,HOSE	ｸﾘｯﾌﾟ	3	
39	23456-42181		STOPPER	ｽﾄｯﾊﾟ	1	
40	238F5-42601		RUBBER,MOUNT	ﾗﾊﾞｰ	4	
41	216G7-32011		COLLAR	ｶﾗｰ	4	
42	22252-32251		WASHER	ﾜｯｼｬ	4	
43	216G6-43241		BOLT	ﾎﾞﾙﾄ	4	

FIG.131 FOOT PEDAL CYLINDER (CLUTCH):[PC]

(F6025460) ﾌｯﾄﾍﾟﾀﾞﾙｼﾘﾝﾀﾞ

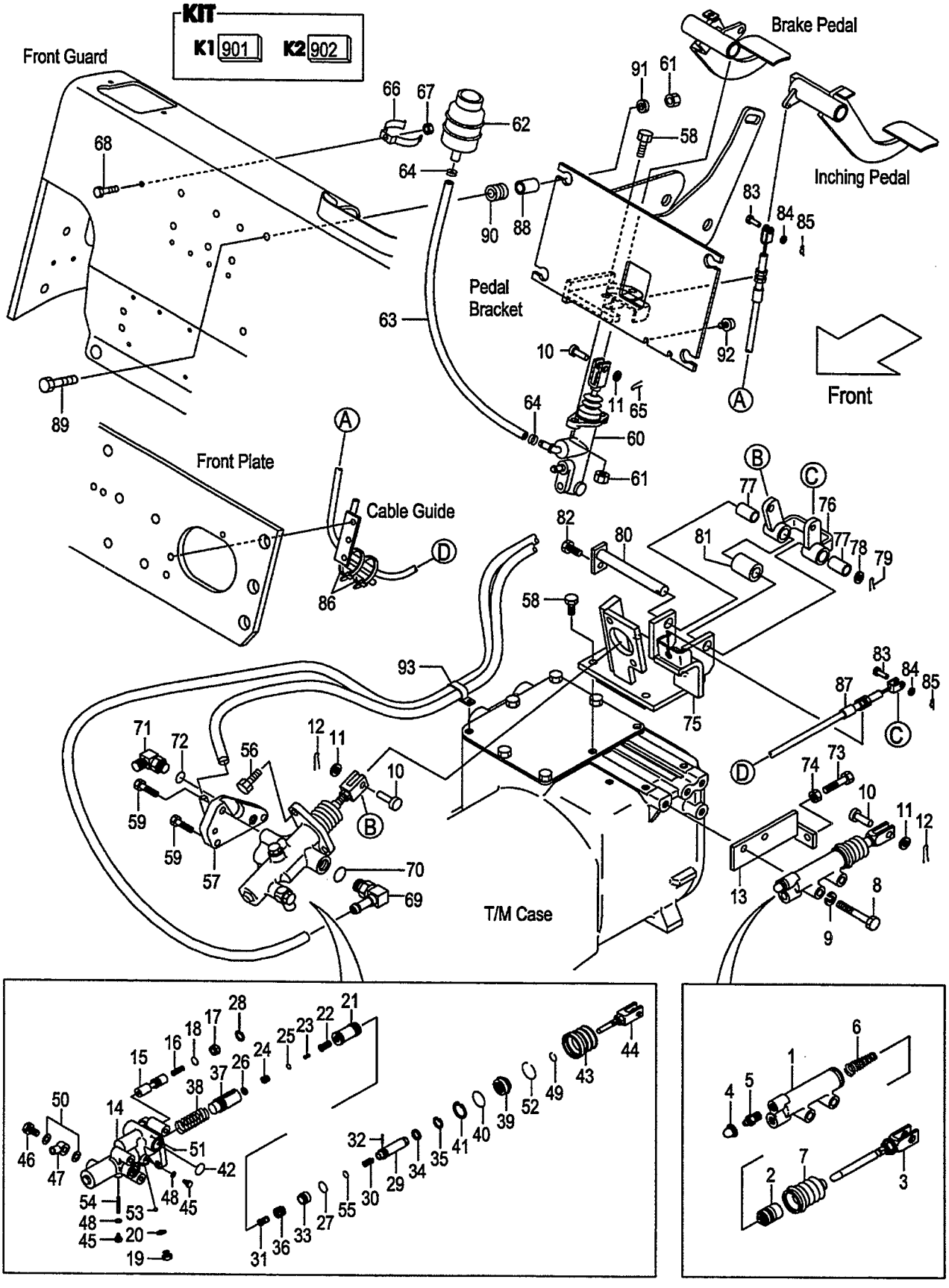

A:FD20C18 FD25C18
B:FD20C7 FD25C7

FIG.131
(F6025460)

Item No	Part No.	Mark	Description		Req'd	Remarks : Serial No.
A1	522A2-10401		CYL-ASSY,CLUTCH-RELEASE	ｼﾘﾝﾀﾞｱｯｾﾝ	1	[PC] INC.1-7
901	522A2-11601	K1	KIT,OVERHAUL	ｵｰﾊﾞｰﾎｰﾙｷｯﾄ	1	[PC] INC.2,4,6,7
1	NO PART NO.	#	BODY,CYL	ﾎﾞﾃﾞｨ	1	[PC]
2	522A2-18541	*	PISTON,RELEASE-CYL	ﾋﾟｽﾄﾝ	1	[PC]
3	522A2-18551		ROD,PUSH	ﾛｯﾄﾞ	1	[PC]
4	522A2-18561	*	CAP,BLEEDER-PLUG	ｷｬｯﾌﾟ	1	[PC]
5	522A2-18571		PLUG,BLEEDER	ﾌﾟﾗｸﾞ	1	[PC]
6	522A2-18581	*	SPRING,CONICAL	ｽﾌﾟﾘﾝｸﾞ	1	[PC]
7	522A2-18591	*	BOOT	ﾌﾞｰﾂ	1	[PC]
8	01103-10060		BOLT	ﾎﾞﾙﾄ	2	[PC]
9	02010-00010		WASHER	ﾜｯｼｬ	2	[PC]
10	02262-10030		PIN,CLEVIS	ﾋﾟﾝ	3	[PC]
11	02000-00010		WASHER	ﾜｯｼｬ	3	[PC]
12	02200-32020		PIN,COTTER	ﾋﾟﾝ	2	[PC]
13	214L5-32101		BRACKET,RELEASE-CYL	ﾌﾞﾗｹｯﾄ	1	[PC]
A2	224W5-30202		BOOSTER-ASSY,CLUTCH	ｸﾗｯﾁﾌﾞｰｽﾀｱｯｾﾝ	1	[PC] INC.14-55
902	224W5-32501	K2	KIT,OVERHAUL	ｵｰﾊﾞｰﾎｰﾙｷｯﾄ	1	[PC] INC.18,20,21,25-28,32,35, 37,39-43,48-55
14	NO PART NO.	#	BODY,BOOSTER	ﾎﾞﾃﾞｨ	1	[PC]
15	224W5-32511		SPOOL,FLOW-DIVIDER	ｽﾌﾟｰﾙ	1	[PC]
16	522A2-18011		SPRING,FLOW-DIVIDER	ｽﾌﾟﾘﾝｸﾞ	1	[PC]
17	522A2-18021		PLUG	ﾌﾟﾗｸﾞ	1	[PC]
18	522A2-18031	*	O-RING	Oﾘﾝｸﾞ	1	[PC]
19	522A2-18041		PLUG	ﾌﾟﾗｸﾞ	1	[PC]
20	522A2-18051	*	GASKET	ｶﾞｽｹｯﾄ	1	[PC]
21	224W5-32401	*	PISTON,POWER	ﾋﾟｽﾄﾝ	1	[PC]
22	522A2-18071		VALVE,CONTROL	ﾊﾞﾙﾌﾞ	1	[PC]
23	522A2-18081		SPRING,CONTROL-VALVE	ｽﾌﾟﾘﾝｸﾞ	1	[PC]
24	522A2-18091		PLUG,PISTON	ﾌﾟﾗｸﾞ	1	[PC]
25	522A2-18101	*	O-RING	Oﾘﾝｸﾞ	1	[PC]
26	522A2-18111	*	RING,SNAP	ｽﾅｯﾌﾟﾘﾝｸﾞ	1	[PC]
27	522A2-18121	*	O-RING	Oﾘﾝｸﾞ	1	[PC]
28	522A2-18131	*	RING,SNAP	ｽﾅｯﾌﾟﾘﾝｸﾞ	1	[PC]
29	224W5-42401		PISTON,REACTION	ﾋﾟｽﾄﾝ	1	[PC]
30	224W5-32421		SPRING,RELIEF-VALVE	ｽﾌﾟﾘﾝｸﾞ	1	[PC]
31	522A2-18161		SEAT,CONTROL-VALVE	ｼｰﾄ	1	[PC]
32	522A2-18171	*	PIN	ﾋﾟﾝ	1	[PC]
33	224W5-42431		PISTON,REACTION	ﾋﾟｽﾄﾝ	1	[PC]
34	522A2-18201		WASHER	ﾜｯｼｬ	1	[PC]
35	522A2-18211	*	RING,SNAP	ｽﾅｯﾌﾟﾘﾝｸﾞ	1	[PC]
36	522A2-18221		SPRING,RETURN,VALVE	ｽﾌﾟﾘﾝｸﾞ	1	[PC]
37	224W5-32441	*	PISTON,MASTER-CYL	ﾋﾟｽﾄﾝ	1	[PC]
38	224W5-32551		SPRING,RETURN,PISTON	ｽﾌﾟﾘﾝｸﾞ	1	[PC]
39	224W5-32521	*	GUIDE,REACTION	ｶﾞｲﾄﾞ	1	[PC]
40	224W5-32451	*	O-RING	Oﾘﾝｸﾞ	1	[PC]
41	224W5-32461	*	RING,SNAP	ｽﾅｯﾌﾟﾘﾝｸﾞ	1	[PC]
42	522A2-18281	*	O-RING	Oﾘﾝｸﾞ	2	[PC]
43	224W5-32471	*	BOOT	ﾌﾞｰﾂ	1	[PC]
44	522A2-18301		ROD,PUSH	ﾛｯﾄﾞ	1	[PC]

FIG.131 FOOT PEDAL CYLINDER (CLUTCH):[PC]

(F6025460) ﾌｯﾄﾍﾟﾀﾞﾙｼﾘﾝﾀﾞ

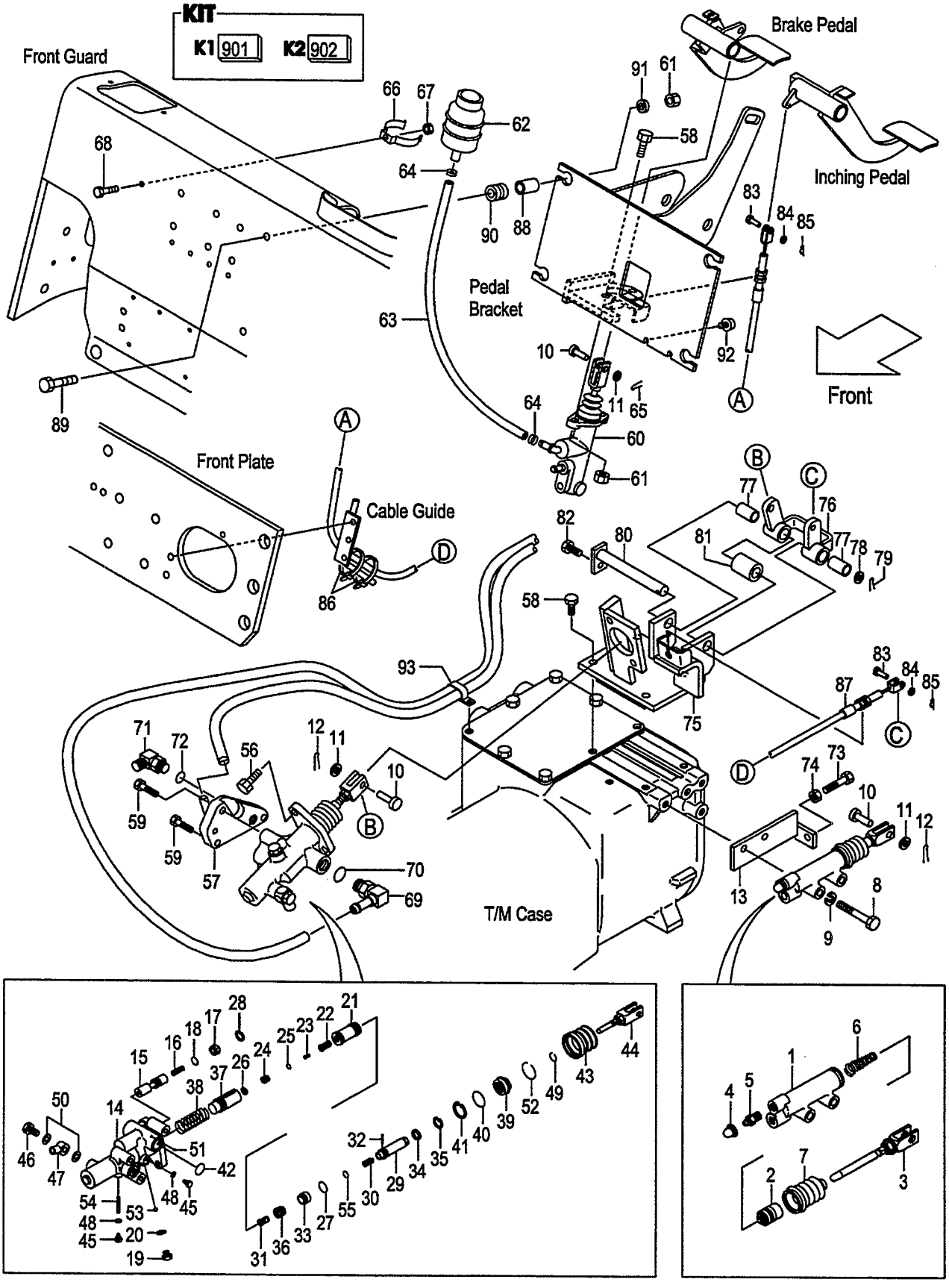

A:FD20C18 FD25C18
B:FD20C7 FD25C7

Item No	Part No.	Mark	Description		Req'd	Remarks : Serial No.
45	522A2-18311		BOLT	ﾎﾞﾙﾄ	2	[PC]
46	522A2-18341		BOLT,UNION	ﾎﾞﾙﾄ	1	[PC]
47	522A2-18352		UNION	ﾕﾆｵﾝ	1	[PC]
48	522A2-18321	*	GASKET	ｶﾞｽｹｯﾄ	2	[PC]
49	522A2-18331	*	RING,SNAP	ｽﾅｯﾌﾟﾘﾝｸﾞ	1	[PC]
50	522A2-18361	*	GASKET	ｶﾞｽｹｯﾄ	2	[PC]
51	522A2-18371	*	BALL	ﾎﾞｰﾙ	1	[PC]
52	224W5-32481	*	RING,SNAP	ｽﾅｯﾌﾟﾘﾝｸﾞ	1	[PC]
53	522A2-18391	*	BALL	ﾎﾞｰﾙ	1	[PC]
54	224W5-32491	*	PIN	ﾋﾟﾝ	1	[PC]
55	55952-18021	*	O-RING	Oﾘﾝｸﾞ	1	[PC]
56	01184-10025		BOLT	ﾎﾞﾙﾄ	2	[PC]
57	239H5-42461		ADAPTER	ｱﾀﾞﾌﾟﾀ	1	[PC]
58	01184-10030		BOLT	ﾎﾞﾙﾄ	6	[PC]
59	01184-10055		BOLT	ﾎﾞﾙﾄ	3	[PC]
60	239A5-40102		CYL,BRAKE-MASTER	ｼﾘﾝﾀﾞ	1	[PC]SEE FIG.139
61	01400-00010		NUT	ﾅｯﾄ	6	[PC]
62	23775-42101		TANK,RESERVE	ﾀﾝｸ	1	[PC]
63	22655-42591		HOSE,RESERVE	ﾎｰｽ	1	[PC]
64	25595-42491		CLIP,HOSE	ｸﾘｯﾌﾟ	2	[PC]
65	02200-32025		PIN,COTTER	ﾋﾟﾝ	1	[PC]
66	224G5-42061		CLIP,RESERVE-TANK	ｸﾘｯﾌﾟ	1	[PC]
67	01400-00006		NUT	ﾅｯﾄ	1	[PC]
68	239A5-42381		BOLT	ﾎﾞﾙﾄ	1	[PC]
A3	224W7-60311		FITTING-ASSY,HOSE	ﾎｰｽﾌｨｯﾃｨﾝｸﾞｱｯｾﾝ	1	[PC] INC.69,70
69	NO PART NO.	#	FITTING,HOSE	ﾌｨｯﾃｨﾝｸﾞ	1	[PC]
70	89140-00006		O-RING	Oﾘﾝｸﾞ	1	[PC]
A4	04150-20202		ELBOW-ASSY	ｴﾙﾎﾞｱｯｾﾝ	1	[PC] INC.71,72
71	NO PART NO.	#	ELBOW	ｴﾙﾎﾞ	1	[PC]
72	03320-00110		O-RING	Oﾘﾝｸﾞ	1	[PC]
73	01100-10030		BOLT	ﾎﾞﾙﾄ	1	[PC]
74	01402-00010		NUT	ﾅｯﾄ	1	[PC]
A5	239H5-40191		BRACKET-ASSY,BOOSTER	ﾌﾞﾗｹｯﾄｱｯｾﾝ	1	[PC] INC.75-82
75	239H5-40201		BRACKET,BOOSTER	ﾌﾞﾗｹｯﾄ	1	[PC]
A6	239H5-40211		LINK-ASSY	ﾘﾝｸｱｯｾﾝ	1	[PC] INC.76,77
76	239H5-42301		LINK	ﾘﾝｸ	1	[PC]
77	256C7-42281		BUSHING	ﾌﾞｯｼﾝｸﾞ	2	[PC]
78	02000-00016		WASHER	ﾜｯｼｬ	1	[PC]
79	02200-04025		PIN,COTTER	ﾋﾟﾝ	1	[PC]
80	239H5-40311		SHAFT	ｼｬﾌﾄ	1	[PC]
81	239H5-42371		SPACER	ｽﾍﾟｰｻ	1	[PC]
82	01183-08016		BOLT	ﾎﾞﾙﾄ	1	[PC]
83	02262-08020		PIN,CLEVIS	ﾋﾟﾝ	2	[PC]
84	02000-00008		WASHER	ﾜｯｼｬ	2	[PC]
85	02200-02016		PIN,COTTER	ﾋﾟﾝ	2	[PC]
86	04913-11200		BAND	ﾊﾞﾝﾄﾞ	2	[PC]
87	239H5-42451		CABLE,INCHING	ｹｰﾌﾞﾙ	1	[PC]
88	216G7-32011		COLLAR	ｶﾗｰ	4	[PC]
89	216G6-43241		BOLT	ﾎﾞﾙﾄ	4	[PC]
90	238F5-42601		RUBBER,MOUNT	ﾗﾊﾞｰ	4	[PC]

FIG.131 FOOT PEDAL CYLINDER (CLUTCH):[PC]

(F6025460) ﾌｯﾄﾍﾟﾀﾞﾙｼﾘﾝﾀﾞ

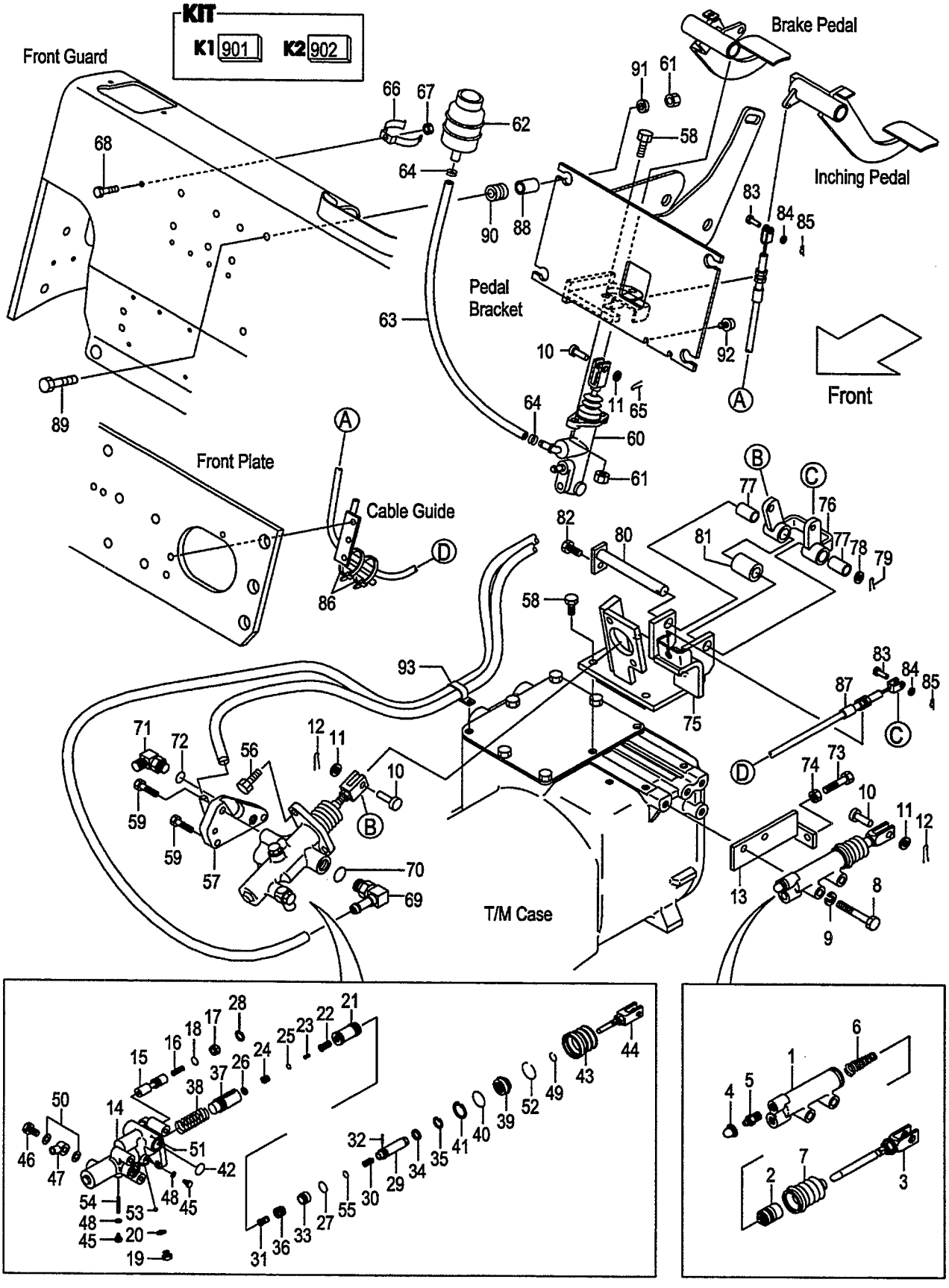

A:FD20C18 FD25C18
B:FD20C7 FD25C7

FIG.131
(F6025460)

Item No	Part No.	Mark	Description		Req'd	Remarks : Serial No.
91	22252-32251		WASHER	ﾜｯｼｬ	4	[PC]
92	23456-42181		STOPPER	ｽﾄｯﾊﾟ	1	[PC]
93	214A2-42331		CLIP	ｸﾘｯﾌﾟ	1	[PC]

FIG.132 FOOT PEDAL CYLINDER (TOR-CON)

(F60254B0) ﾌｯﾄﾍﾟﾀﾞﾙｼﾘﾝﾀﾞ

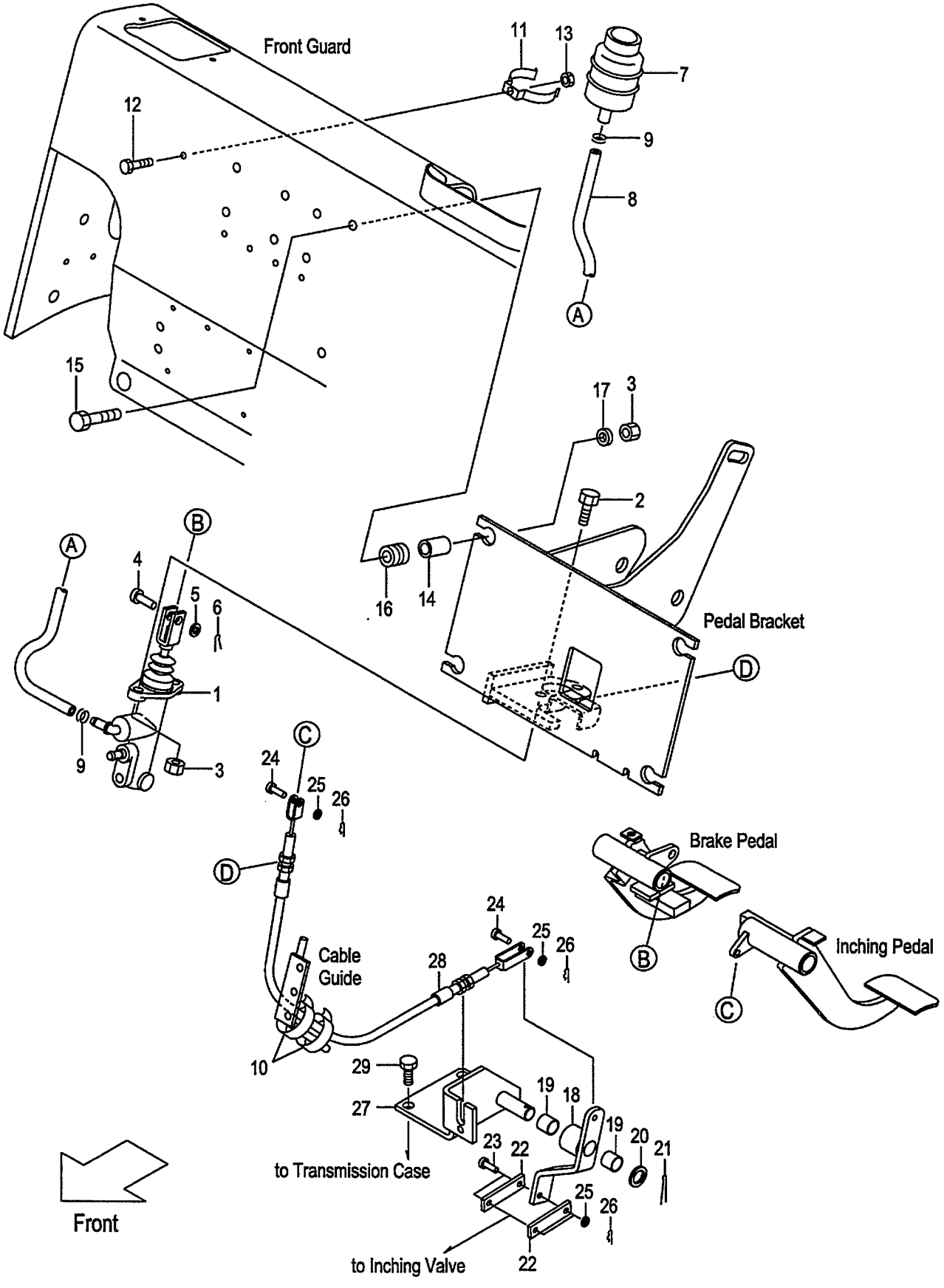

A:FD20T18 FD25T18
B:FD20T7 FD25T7

FIG.132
(F60254B0)

Item No	Part No.	Mark	Description		Req'd	Remarks : Serial No.
1	239A5-40102		CYL,BRAKE-MASTER	ｼﾘﾝﾀﾞ	1	SEE FIG.139
2	01184-10030		BOLT	ﾎﾞﾙﾄ	2	
3	01400-00010		NUT	ﾅｯﾄ	6	
4	02262-10030		PIN,CLEVIS	ﾋﾟﾝ	1	
5	02000-00010		WASHER	ﾜｯｼｬ	1	
6	02200-32025		PIN,COTTER	ﾋﾟﾝ	1	
7	23775-42101		TANK,RESERVE	ﾀﾝｸ	1	
8	22655-42591		HOSE	ﾎｰｽ	1	
9	25595-42491		CLIP,HOSE	ｸﾘｯﾌﾟ	2	
10	04913-11200		BAND	ﾊﾞﾝﾄﾞ	2	
11	224G5-42061		CLIP,RESERVE-TANK	ｸﾘｯﾌﾟ	1	
12	239A5-42381		BOLT	ﾎﾞﾙﾄ	1	
13	01400-00006		NUT	ﾅｯﾄ	1	
14	216G7-32011		COLLAR	ｶﾗｰ	4	
15	216G6-43241		BOLT	ﾎﾞﾙﾄ	4	
16	238F5-42601		RUBBER,MOUNT	ﾗﾊﾞｰ	4	
17	22252-32251		WASHER	ﾜｯｼｬ	4	
A1	239G5-40101		LINK-ASSY	ﾘﾝｸｱｯｾﾝ	1	INC.18,19
18	NO PART NO.	#	LINK	ﾘﾝｸ	1	
19	23647-40121		BUSHING	ﾌﾞｯｼﾝｸﾞ	2	
20	02000-00016		WASHER	ﾜｯｼｬ	1	
21	02200-04025		PIN,COTTER	ﾋﾟﾝ	1	
22	218H5-42521		PLATE	ﾌﾟﾚｰﾄ	2	
23	02262-06025		PIN,CLEVIS	ﾋﾟﾝ	2	
24	02262-06020		PIN,CLEVIS	ﾋﾟﾝ	2	
25	02000-00006		WASHER	ﾜｯｼｬ	4	
26	216G5-22081		PIN,SNAP	ﾋﾟﾝ	4	
27	239G5-40502		BRACKET,LINK	ﾌﾞﾗｹｯﾄ	1	
28	239B5-42501		CABLE,INCHING	ｹｰﾌﾞﾙ	1	
29	01184-10020		BOLT	ﾎﾞﾙﾄ	2	

FIG.133 FOOT PEDAL CYLINDER (OIL CLUTCH)

(F60254F0) フットペダルシリンダ

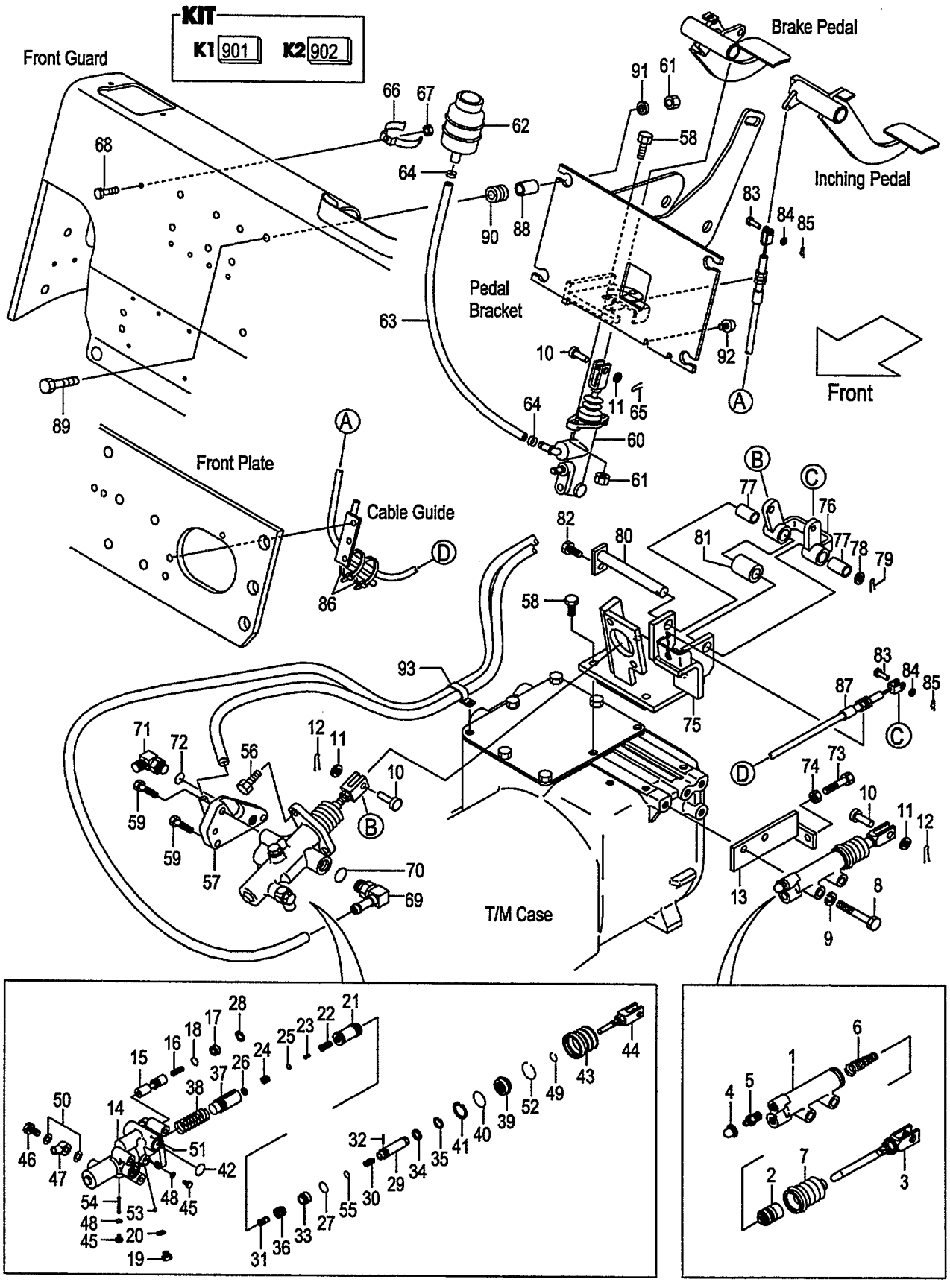

A:FD20W7 FD25W7

Item No	Part No.	Mark	Description		Req'd	Remarks : Serial No.
A1	522A2-10401		CYL-ASSY,CLUTCH-RELEASE	ｼﾘﾝﾀﾞｱｯｾﾝ	1	INC.1-7
901	522A2-11601	K1	KIT,OVERHAUL	ｵｰﾊﾞｰﾎｰﾙｷｯﾄ	1	INC.2,4,6,7
1	NO PART NO.	#	BODY,CYL	ﾎﾞﾃﾞｨ	1	
2	522A2-18541	*	PISTON,RELEASE-CYL	ﾋﾟｽﾄﾝ	1	
3	522A2-18551		ROD,PUSH	ﾛｯﾄﾞ	1	
4	522A2-18561	*	CAP,BLEEDER-PLUG	ｷｬｯﾌﾟ	1	
5	522A2-18571		PLUG,BLEEDER	ﾌﾟﾗｸﾞ	1	
6	522A2-18581	*	SPRING,CONICAL	ｽﾌﾟﾘﾝｸﾞ	1	
7	522A2-18591	*	BOOT	ﾌﾞｰﾂ	1	
8	01103-10060		BOLT	ﾎﾞﾙﾄ	2	
9	02010-00010		WASHER	ﾜｯｼｬ	2	
10	02262-10030		PIN,CLEVIS	ﾋﾟﾝ	3	
11	02000-00010		WASHER	ﾜｯｼｬ	3	
12	02200-32020		PIN,COTTER	ﾋﾟﾝ	2	
13	214L5-32101		BRACKET,RELEASE-CYL	ﾌﾞﾗｹｯﾄ	1	
A2	224W5-30202		BOOSTER-ASSY,CLUTCH	ｸﾗｯﾁﾌﾞｰｽﾀｱｯｾﾝ	1	INC.14-55
902	224W5-32501	K2	KIT,OVERHAUL	ｵｰﾊﾞｰﾎｰﾙｷｯﾄ	1	INC.18,20,21,25-28,32,35, 37,39-43,48-55
14	NO PART NO.	#	BODY,BOOSTER	ﾎﾞﾃﾞｨ	1	
15	224W5-32511		SPOOL,FLOW-DIVIDER	ｽﾌﾟｰﾙ	1	
16	522A2-18011		SPRING,FLOW-DIVIDER	ｽﾌﾟﾘﾝｸﾞ	1	
17	522A2-18021		PLUG	ﾌﾟﾗｸﾞ	1	
18	522A2-18031	*	O-RING	Oﾘﾝｸﾞ	1	
19	522A2-18041		PLUG	ﾌﾟﾗｸﾞ	1	
20	522A2-18051	*	GASKET	ｶﾞｽｹｯﾄ	1	
21	224W5-32401	*	PISTON,POWER	ﾋﾟｽﾄﾝ	1	
22	522A2-18071		VALVE,CONTROL	ﾊﾞﾙﾌﾞ	1	
23	522A2-18081		SPRING,CONTROL-VALVE	ｽﾌﾟﾘﾝｸﾞ	1	
24	522A2-18091		PLUG,PISTON	ﾌﾟﾗｸﾞ	1	
25	522A2-18101	*	O-RING	Oﾘﾝｸﾞ	1	
26	522A2-18111	*	RING,SNAP	ｽﾅｯﾌﾟﾘﾝｸﾞ	1	
27	522A2-18121	*	O-RING	Oﾘﾝｸﾞ	1	
28	522A2-18131	*	RING,SNAP	ｽﾅｯﾌﾟﾘﾝｸﾞ	1	
29	224W5-42401		PISTON,REACTION	ﾋﾟｽﾄﾝ	1	
30	224W5-32421		SPRING,RELIEF-VALVE	ｽﾌﾟﾘﾝｸﾞ	1	
31	522A2-18161		SEAT,CONTROL-VALVE	ｼｰﾄ	1	
32	522A2-18171	*	PIN	ﾋﾟﾝ	1	
33	224W5-42431		PISTON,REACTION	ﾋﾟｽﾄﾝ	1	
34	522A2-18201		WASHER	ﾜｯｼｬ	1	
35	522A2-18211	*	RING,SNAP	ｽﾅｯﾌﾟﾘﾝｸﾞ	1	
36	522A2-18221		SPRING,RETURN,VALVE	ｽﾌﾟﾘﾝｸﾞ	1	
37	224W5-32441	*	PISTON,MASTER-CYL	ﾋﾟｽﾄﾝ	1	
38	224W5-32551		SPRING,RETURN,PISTON	ｽﾌﾟﾘﾝｸﾞ	1	
39	224W5-32521	*	GUIDE,REACTION	ｶﾞｲﾄﾞ	1	
40	224W5-32451	*	O-RING	Oﾘﾝｸﾞ	1	
41	224W5-32461	*	RING,SNAP	ｽﾅｯﾌﾟﾘﾝｸﾞ	1	
42	522A2-18281	*	O-RING	Oﾘﾝｸﾞ	2	
43	224W5-32471	*	BOOT	ﾌﾞｰﾂ	1	
44	522A2-18301		ROD,PUSH	ﾛｯﾄﾞ	1	
45	522A2-18311		BOLT	ﾎﾞﾙﾄ	2	

FIG.133 FOOT PEDAL CYLINDER (OIL CLUTCH)

(F60254F0) フットペダルシリンダ

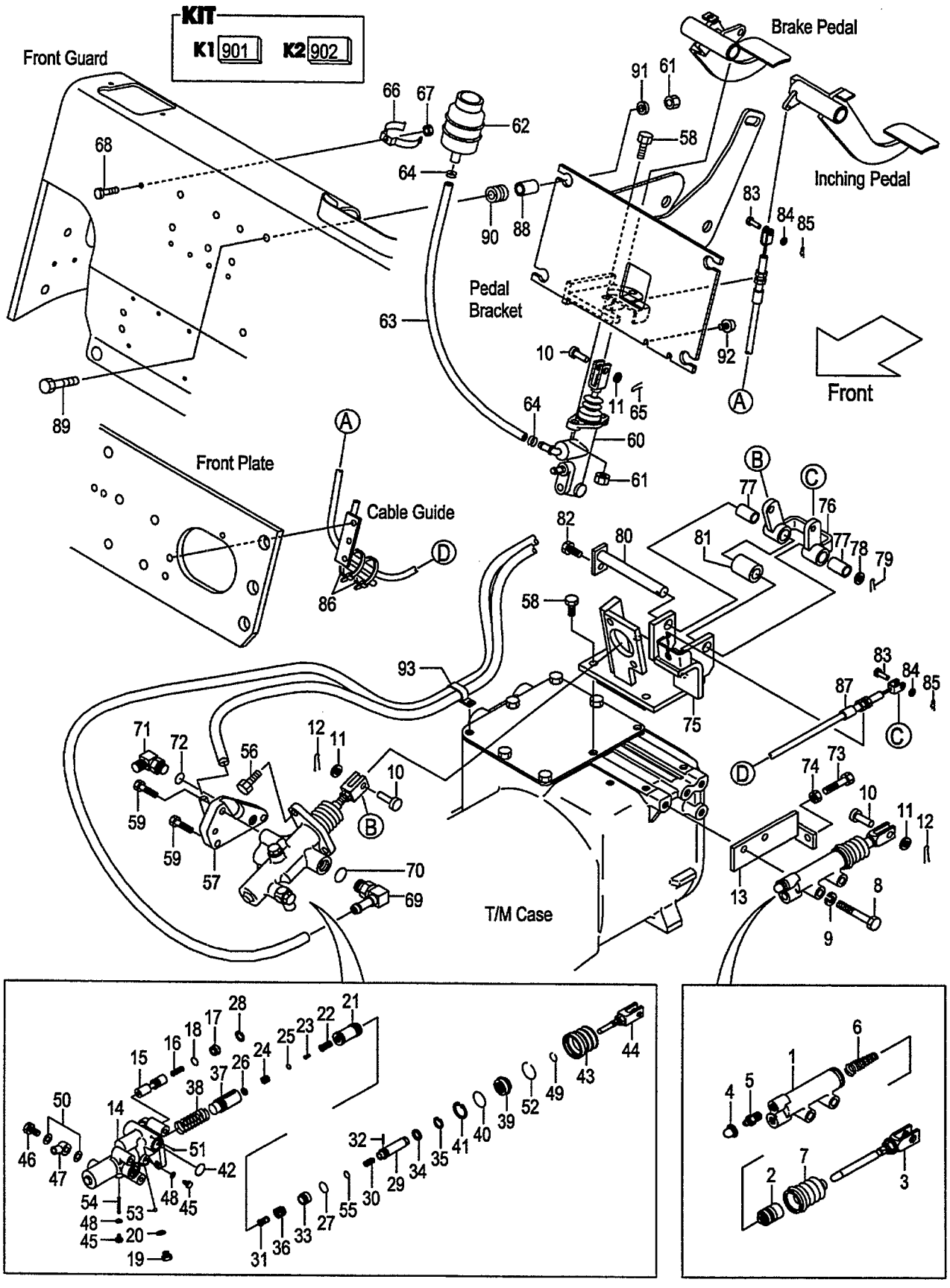

A:FD20W7 FD25W7

Item No	Part No.	Mark	Description		Req'd	Remarks : Serial No.
46	522A2-18341		BOLT,UNION	ﾎﾞﾙﾄ	1	
47	522A2-18352		UNION	ﾕﾆｵﾝ	1	
48	522A2-18321	*	GASKET	ｶﾞｽｹｯﾄ	2	
49	522A2-18331	*	RING,SNAP	ｽﾅｯﾌﾟﾘﾝｸﾞ	1	
50	522A2-18361	*	GASKET	ｶﾞｽｹｯﾄ	2	
51	522A2-18371	*	BALL	ﾎﾞｰﾙ	1	
52	224W5-32481	*	RING,SNAP	ｽﾅｯﾌﾟﾘﾝｸﾞ	1	
53	522A2-18391	*	BALL	ﾎﾞｰﾙ	1	
54	224W5-32491	*	PIN	ﾋﾟﾝ	1	
55	55952-18021	*	O-RING	Oﾘﾝｸﾞ	1	
56	01184-10025		BOLT	ﾎﾞﾙﾄ	2	
57	239H5-42461		ADAPTER	ｱﾀﾞﾌﾟﾀ	1	
58	01184-10030		BOLT	ﾎﾞﾙﾄ	6	
59	01184-10055		BOLT	ﾎﾞﾙﾄ	3	
60	239A5-40102		CYL,BRAKE-MASTER	ｼﾘﾝﾀﾞ	1	SEE FIG.139
61	01400-00010		NUT	ﾅｯﾄ	6	
62	23775-42101		TANK,RESERVE	ﾀﾝｸ	1	
63	22655-42591		HOSE,RESERVE	ﾎｰｽ	1	
64	25595-42491		CLIP,HOSE	ｸﾘｯﾌﾟ	2	
65	02200-32025		PIN,COTTER	ﾋﾟﾝ	1	
66	224G5-42061		CLIP,RESERVE-TANK	ｸﾘｯﾌﾟ	1	
67	01400-00006		NUT	ﾅｯﾄ	1	
68	239A5-42381		BOLT	ﾎﾞﾙﾄ	1	
A3	224W7-60311		FITTING-ASSY,HOSE	ﾎｰｽﾌｨｯﾃｨﾝｸﾞｱｯｾﾝ	1	INC.69,70
69	NO PART NO.	#	FITTING,HOSE	ﾌｨｯﾃｨﾝｸﾞ	1	
70	89140-00006		O-RING	Oﾘﾝｸﾞ	1	
A4	04150-20202		ELBOW-ASSY	ｴﾙﾎﾞｱｯｾﾝ	1	INC.71,72
71	NO PART NO.	#	ELBOW	ｴﾙﾎﾞ	1	
72	03320-00110		O-RING	Oﾘﾝｸﾞ	1	
73	01100-10030		BOLT	ﾎﾞﾙﾄ	1	
74	01402-00010		NUT	ﾅｯﾄ	1	
A5	239H5-40191		BRACKET-ASSY,BOOSTER	ﾌﾞﾗｹｯﾄｱｯｾﾝ	1	INC.75-82
75	239H5-40201		BRACKET,BOOSTER	ﾌﾞﾗｹｯﾄ	1	
A6	239H5-40211		LINK-ASSY	ﾘﾝｸｱｯｾﾝ	1	INC.76,77
76	239H5-42301		LINK	ﾘﾝｸ	1	
77	256C7-42281		BUSHING	ﾌﾞｯｼﾝｸﾞ	2	
78	02000-00016		WASHER	ﾜｯｼｬ	1	
79	02200-04025		PIN,COTTER	ﾋﾟﾝ	1	
80	239H5-40311		SHAFT	ｼｬﾌﾄ	1	
81	239H5-42371		SPACER	ｽﾍﾟｰｻ	1	
82	01183-08016		BOLT	ﾎﾞﾙﾄ	1	
83	02262-08020		PIN,CLEVIS	ﾋﾟﾝ	2	
84	02000-00008		WASHER	ﾜｯｼｬ	2	
85	02200-02016		PIN,COTTER	ﾋﾟﾝ	2	
86	04913-11200		BAND	ﾊﾞﾝﾄﾞ	2	
87	239H5-42451		CABLE,INCHING	ｹｰﾌﾞﾙ	1	
88	216G7-32011		COLLAR	ｶﾗｰ	4	
89	216G6-43241		BOLT	ﾎﾞﾙﾄ	4	
90	238F5-42601		RUBBER,MOUNT	ﾗﾊﾞｰ	4	
91	22252-32251		WASHER	ﾜｯｼｬ	4	

FIG.133 FOOT PEDAL CYLINDER (OIL CLUTCH)

(F60254F0) フットペダルシリンダ

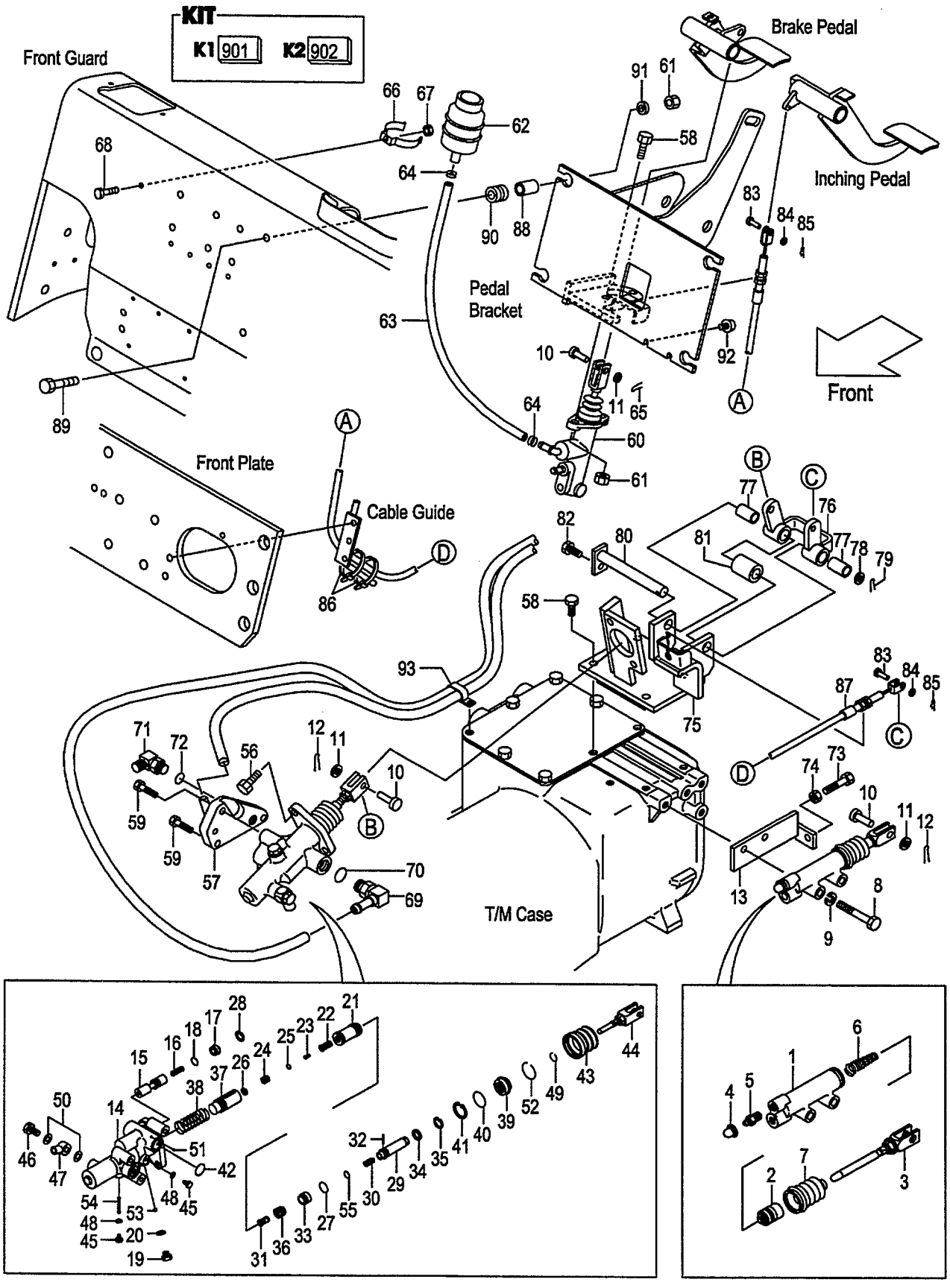

A:FD20W7 FD25W7

Item No	Part No.	Mark	Description	Req'd	Remarks : Serial No.
92	23456-42181		STOPPER ｽﾄｯﾊﾟ	1	
93	214A2-42331		CLIP ｸﾘｯﾌﾟ	1	

FIG.134 BRAKE PIPE (CLUTCH)

(F6025430) ﾌﾞﾚｰｷﾊﾟｲﾌﾟ

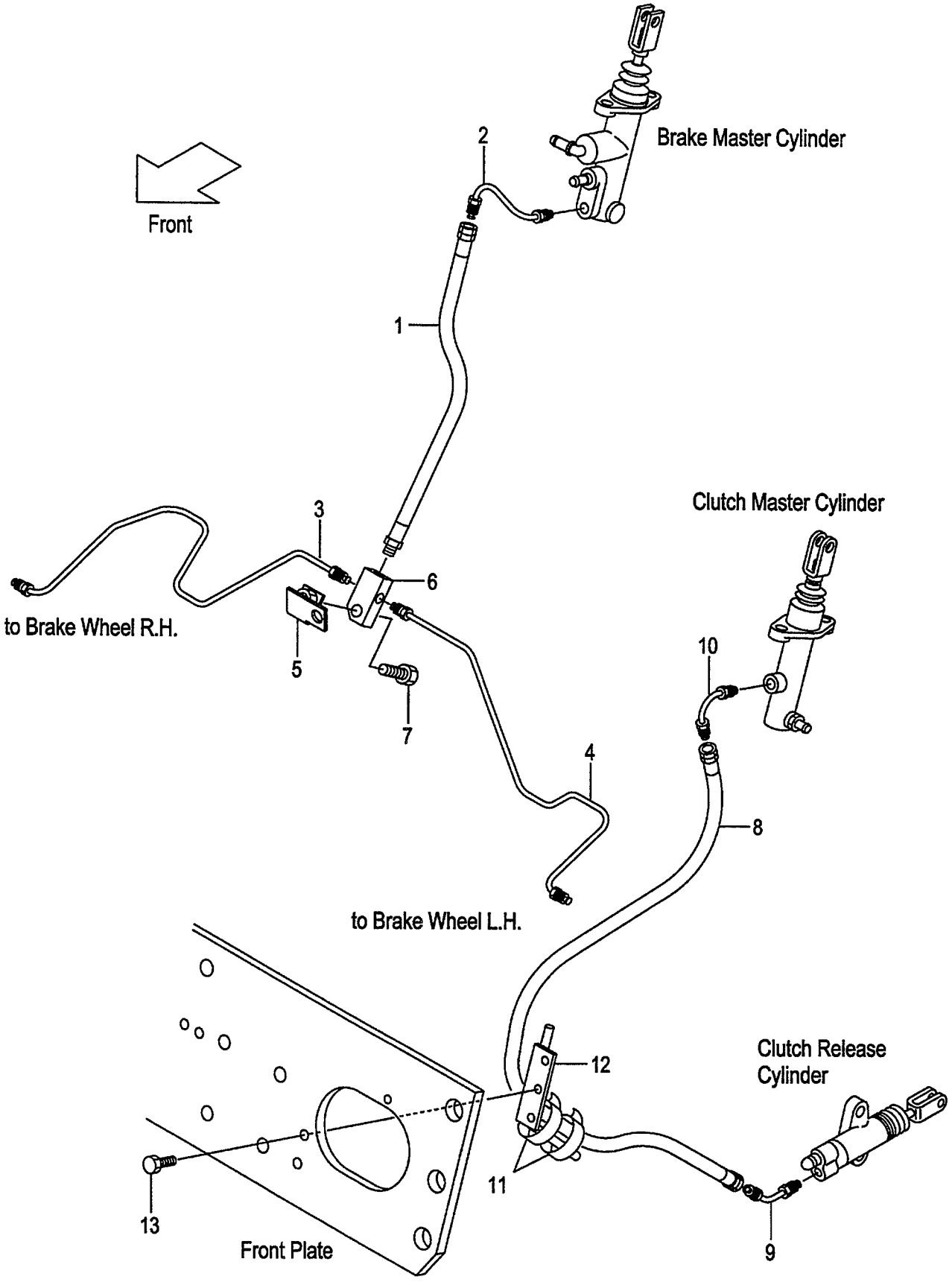

A:FD20C18 FD25C18
B:FD20C7 FD25C7

FIG.134
(F6025430)

Item No	Part No.	Mark	Description		Req'd	Remarks : Serial No.
1	239A5-42071		HOSE,BRAKE	ﾎｰｽ	1	
2	238F5-42421		PIPE,BRAKE-MASTER	ﾊﾟｲﾌﾟ	1	
3	239B5-42601		PIPE,BRAKE,RH	ﾊﾟｲﾌﾟ	1	
4	239B5-42621		PIPE,BRAKE,LH	ﾊﾟｲﾌﾟ	1	
5	239B5-42421		BRACKET,THREE-WAY	ﾌﾞﾗｹｯﾄ	1	
6	23455-42021		THREE-WAY	ｽﾘｰｳｴｲ	1	
7	01184-10030		BOLT	ﾎﾞﾙﾄ	1	
8	239A5-42451		HOSE,CLUTCH	ﾎｰｽ	1	
9	239A5-42461		PIPE,CLUTCH-RELEASE	ﾊﾟｲﾌﾟ	1	
10	239A5-42471		PIPE,CLUTCH-MASTER	ﾊﾟｲﾌﾟ	1	
11	04913-11200		BAND	ﾊﾞﾝﾄﾞ	2	
12	239A5-42351		GUIDE,CABLE	ｶﾞｲﾄﾞ	1	(WITHOUT EXC,EXE,EXK,EXN,OBT)
13	216H3-92291		BOLT	ﾎﾞﾙﾄ	2	(WITHOUT EXC,EXE,EXK,EXN,OBT)

FIG.135 BRAKE PIPE (CLUTCH):[PC]

(F6025470) ﾌﾞﾚｰｷﾊﾟｲﾌﾟ

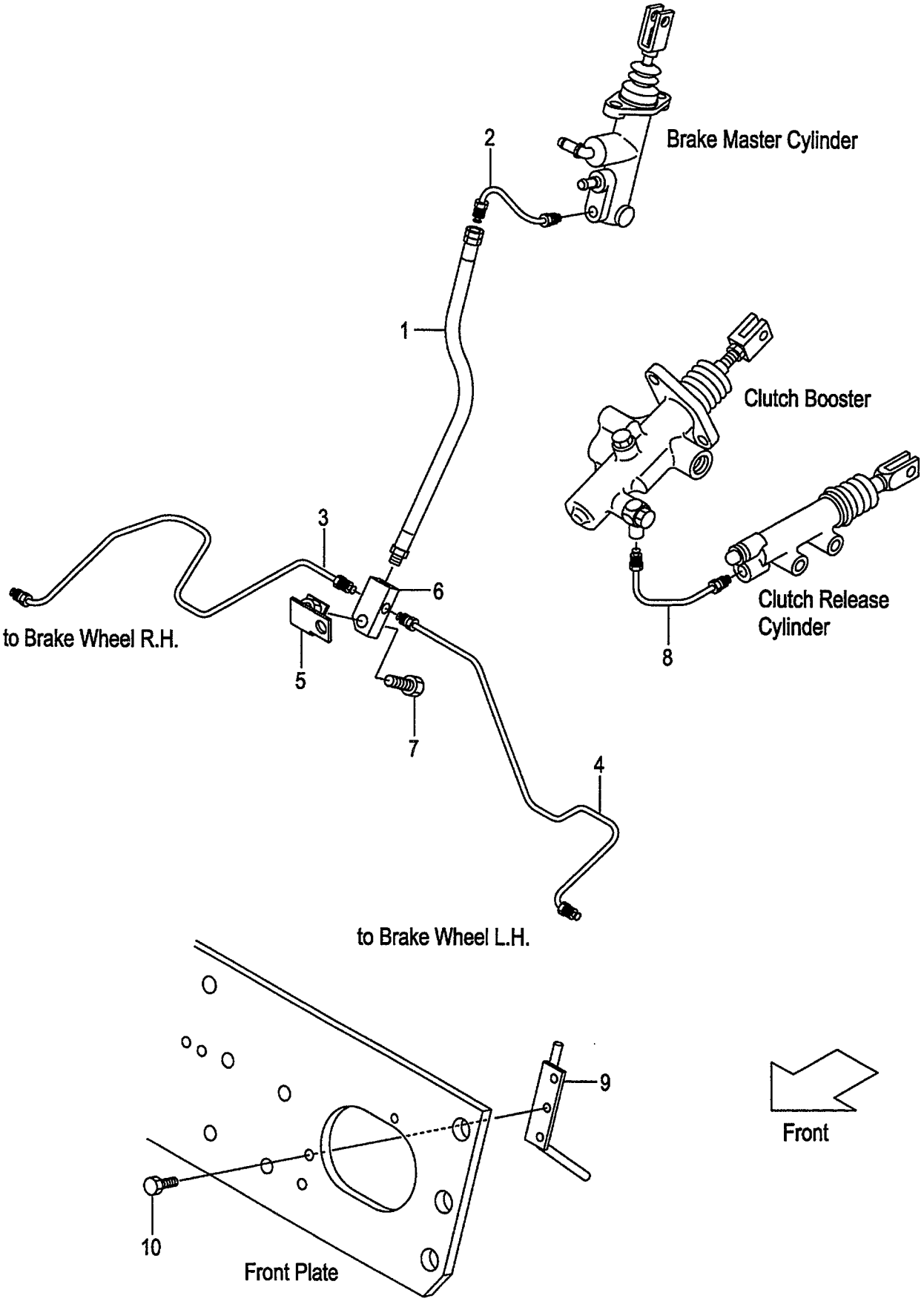

A:FD20C18 FD25C18
B:FD20C7 FD25C7

FIG.135
(F6025470)

Item No	Part No.	Mark	Description		Req'd	Remarks : Serial No.
1	239A5-42071		HOSE,BRAKE	ﾎｰｽ	1	[PC]
2	238F5-42421		PIPE,BRAKE-MASTER	ﾊﾟｲﾌﾟ	1	[PC]
3	239B5-42601		PIPE,BRAKE,RH	ﾊﾟｲﾌﾟ	1	[PC]
4	239B5-42621		PIPE,BRAKE,LH	ﾊﾟｲﾌﾟ	1	[PC]
5	239B5-42421		BRACKET,THREE-WAY	ﾌﾞﾗｹｯﾄ	1	[PC]
6	23455-42021		THREE-WAY	ｽﾘｰｳｴｲ	1	[PC]
7	01184-10030		BOLT	ﾎﾞﾙﾄ	1	[PC]
8	239H5-42381		PIPE,RELEASE-CYL	ﾊﾟｲﾌﾟ	1	[PC]
9	239A5-42351		GUIDE,CABLE	ｶﾞｲﾄﾞ	1	[PC]
10	216H3-92291		BOLT	ﾎﾞﾙﾄ	2	[PC]

FIG.136 BRAKE PIPE (TOR-CON)

(F60254D0) ﾌﾞﾚｰｷﾊﾟｲﾌﾟ

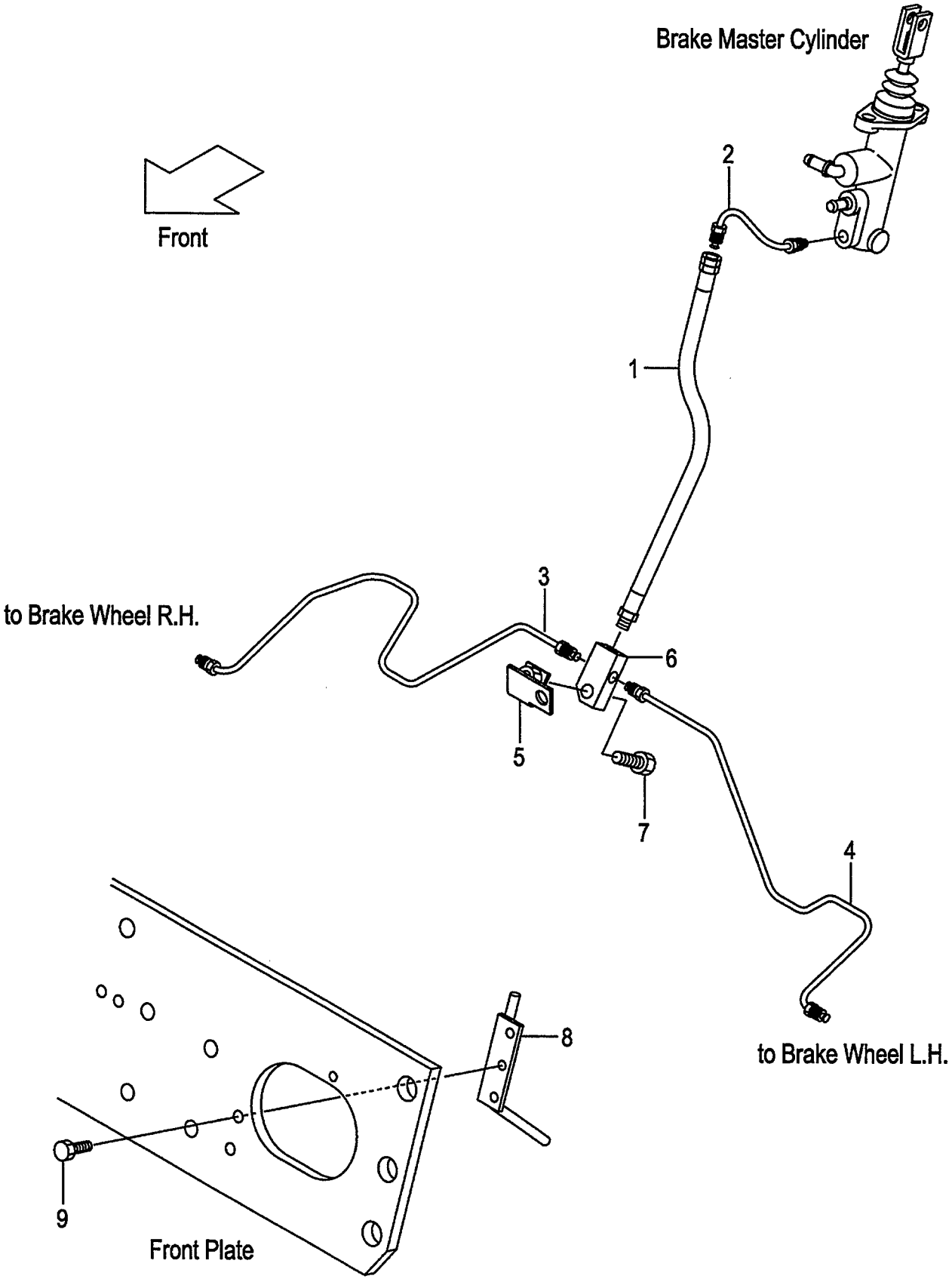

A:FD20T18 FD25T18
B:FD20T7 FD25T7

FIG.136
(F60254D0)

Item No	Part No.	Mark	Description		Req'd	Remarks : Serial No.
1	239A5-42071		HOSE,BRAKE	ﾎｰｽ	1	
2	238F5-42421		PIPE,BRAKE-MASTER	ﾊﾟｲﾌﾟ	1	
3	239B5-42601		PIPE,BRAKE,RH	ﾊﾟｲﾌﾟ	1	
4	239B5-42621		PIPE,BRAKE,LH	ﾊﾟｲﾌﾟ	1	
5	239B5-42421		BRACKET,THREE-WAY	ﾌﾞﾗｹｯﾄ	1	
6	23455-42021		THREE-WAY	ｽﾘｰｳｴｲ	1	
7	01184-10030		BOLT	ﾎﾞﾙﾄ	1	
8	239A5-42351		GUIDE,CABLE	ｶﾞｲﾄﾞ	1	(WITHOUT EXC,EXE,EXK,EXN,OBT)
9	216H3-92291		BOLT	ﾎﾞﾙﾄ	2	(WITHOUT EXC,EXE,EXK,EXN,OBT)

FIG.137 BRAKE PIPE (OIL CLUTCH)

(F60254G0) ﾌﾞﾚｰｷﾊﾟｲﾌﾟ

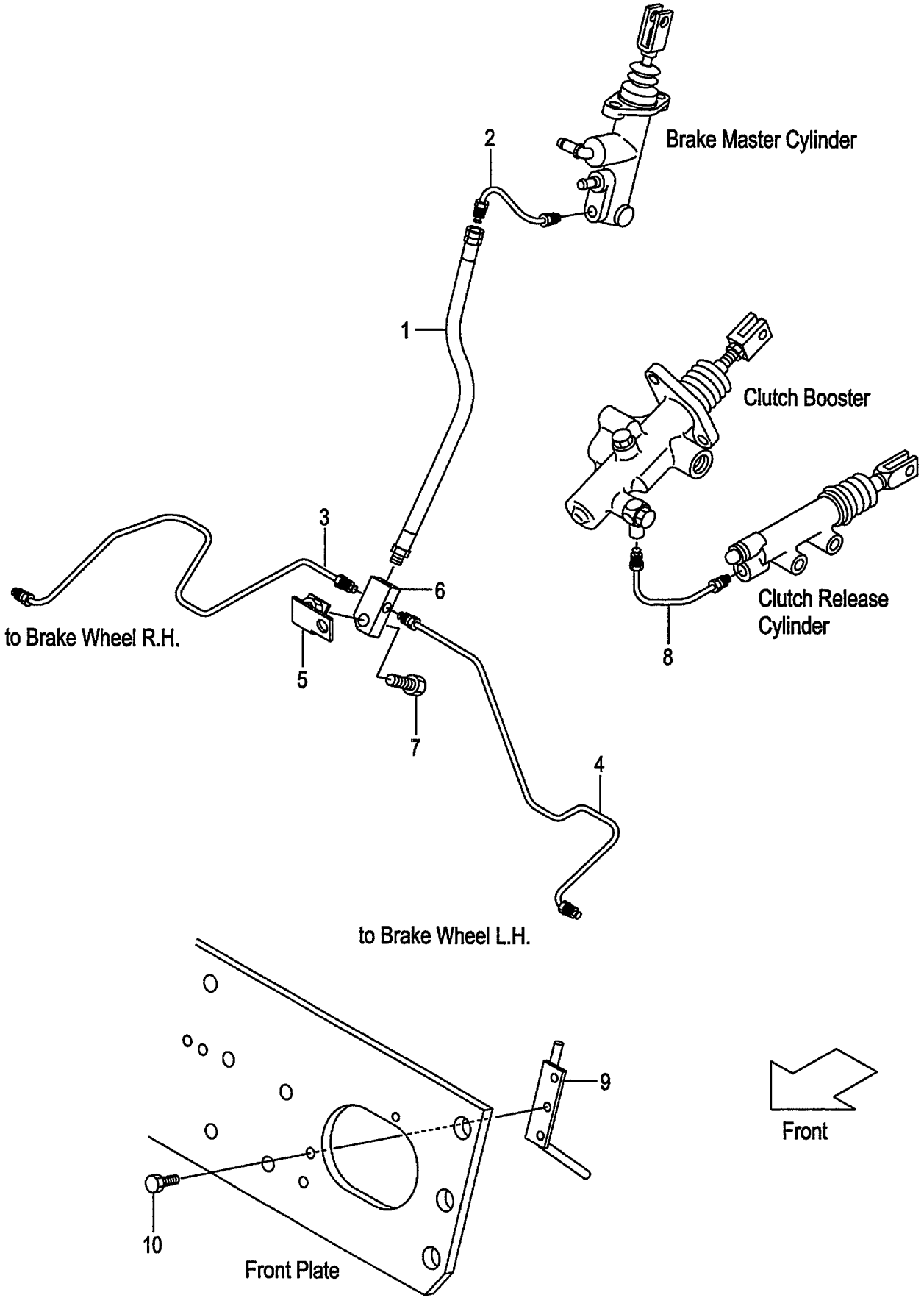

FIG.137
(F60254G0)

A:FD20W7 FD25W7

Item No	Part No.	Mark	Description		Req'd	Remarks : Serial No.
1	239A5-42071		HOSE,BRAKE	ﾎｰｽ	1	
2	238F5-42421		PIPE,BRAKE-MASTER	ﾊﾟｲﾌﾟ	1	
3	239B5-42601		PIPE,BRAKE,RH	ﾊﾟｲﾌﾟ	1	
4	239B5-42621		PIPE,BRAKE,LH	ﾊﾟｲﾌﾟ	1	
5	239B5-42421		BRACKET,THREE-WAY	ﾌﾞﾗｹｯﾄ	1	
6	23455-42021		THREE-WAY	ｽﾘｰｳｴｲ	1	
7	01184-10030		BOLT	ﾎﾞﾙﾄ	1	
8	239H5-42381		PIPE,RELEASE-CYL	ﾊﾟｲﾌﾟ	1	
9	239A5-42351		GUIDE,CABLE	ｶﾞｲﾄﾞ	1	
10	216H3-92291		BOLT	ﾎﾞﾙﾄ	2	

FIG.138 FOOT PEDAL COVER

(F6025440) ﾌｯﾄﾍﾟﾀﾞﾙｶﾊﾞｰ

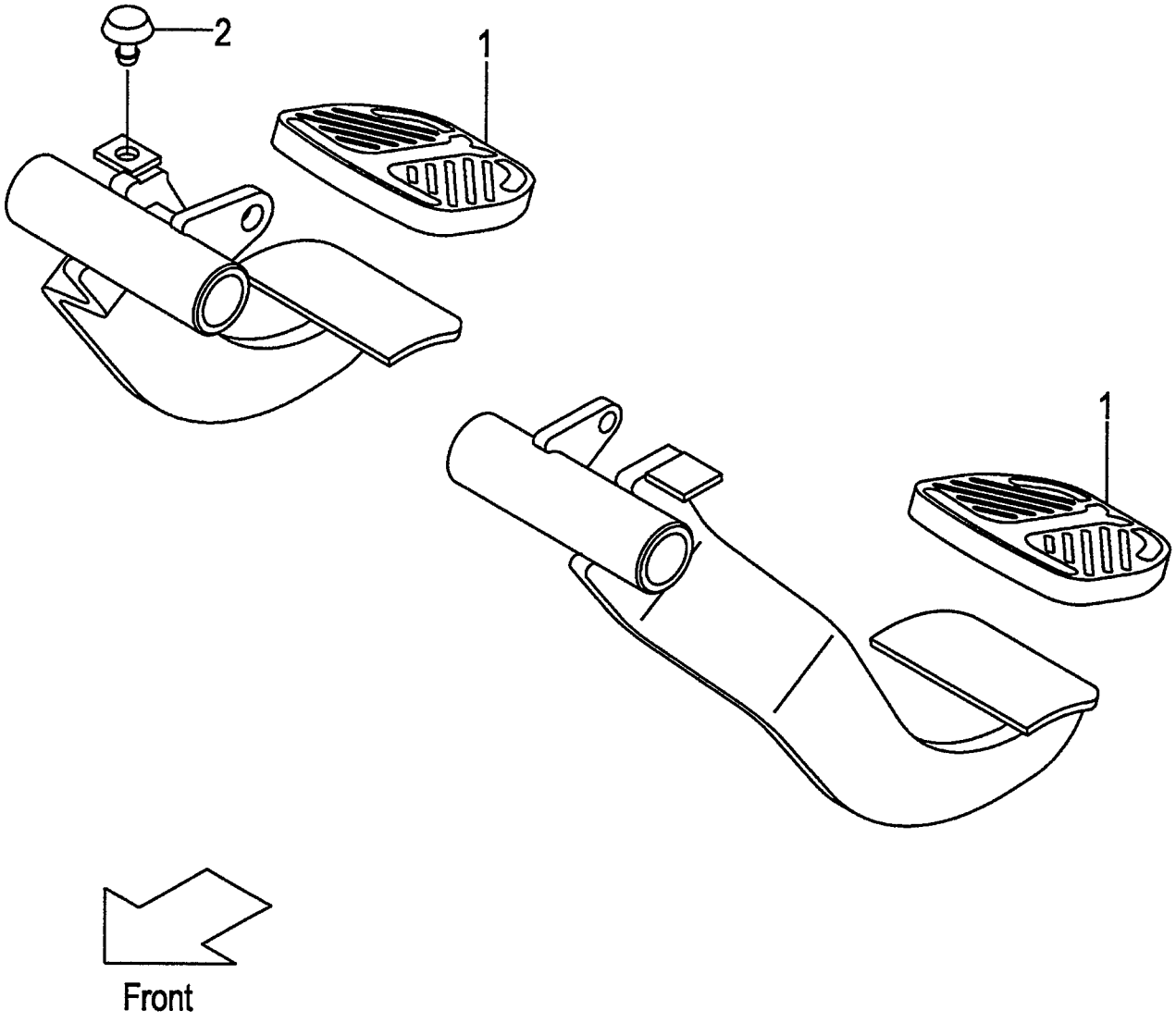

A:FD20C18 FD25C18 D:FD20T7 FD25T7
B:FD20T18 FD25T18 E:FD20W7 FD25W7
C:FD20C7 FD25C7

FIG.138
(F6025440)

Item No	Part No.	Mark	Description	Req'd	Remarks : Serial No.
1	239A5-42301		COVER,HEAD カバー	2	
2	23235-40091		RUBBER ラバー	1	

FIG.139 BRAKE MASTER CYLINDER

(F60254E0) ﾌﾞﾚｰｷﾏｽﾀｼﾘﾝﾀﾞ

KIT
K1 901

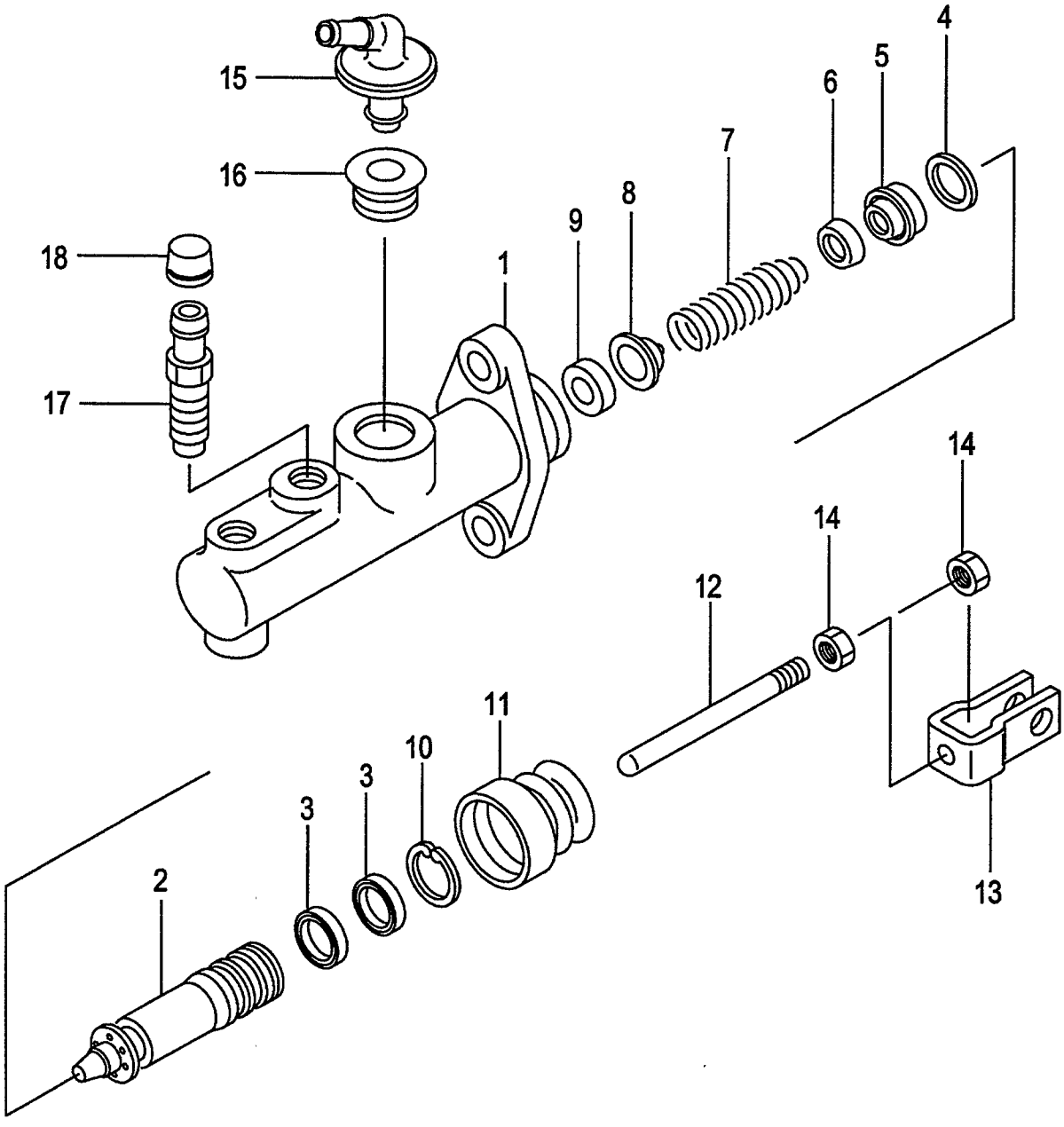

A:FD20C18 FD25C18 D:FD20T7 FD25T7
B:FD20T18 FD25T18 E:FD20W7 FD25W7
C:FD20C7 FD25C7

FIG.139
(F60254E0)

Item No	Part No.	Mark	Description		Req'd	Remarks : Serial No.
A1	239A5-40102		CYL-ASSY,BRAKE-MASTER	ｼﾘﾝﾀﾞｱｯｾﾝ	1	INC.1-18
901	239A5-40641	K1	KIT,REPAIR	ﾘﾍﾟｱｷｯﾄ	1	INC.2-7,10,11,18
1	NO PART NO.	#	BODY,CYL	ﾎﾞﾃﾞｨ	1	
2	239A5-42161	*	PISTON	ﾋﾟｽﾄﾝ	1	
3	239A5-42121	*	CAP,SECONDARY	ｷｬｯﾌﾟ	2	
4	239A5-42101	*	SPACER	ｽﾍﾟｰｻ	1	
5	239A5-42181	*	CAP,PRIMARY	ｷｬｯﾌﾟ	1	
6	239A5-42191	*	THIMBLE	ｼﾝﾌﾞﾙ	1	
7	239A5-42251	*	SPRING	ｽﾌﾟﾘﾝｸﾞ	1	
8	25595-42381		VALVE	ﾊﾞﾙﾌﾞ	1	
9	25595-42391		SEAT,VALVE	ｼｰﾄ	1	
10	25595-42311	*	RING,SNAP	ｽﾅｯﾌﾟﾘﾝｸﾞ	1	
11	239A5-42221	*	BOOT	ﾌﾞｰﾂ	1	
12	239A5-42271		ROD,PUSH	ﾛｯﾄﾞ	1	
13	239A5-42281		YOKE	ﾖｰｸ	1	
14	239A5-42291		NUT	ﾅｯﾄ	2	
15	25595-42411		UNION,FILLER	ﾕﾆｵﾝ	1	
16	25595-42421		BUSHING	ﾌﾞｯｼﾝｸﾞ	1	
17	239A5-42311		VALVE,BLEEDER	ﾊﾞﾙﾌﾞ	1	
18	239A5-42321	*	CAP,BLEEDER	ｷｬｯﾌﾟ	1	

FIG.140 BRAKE LEVER

(F6025510) ブレーキレバー

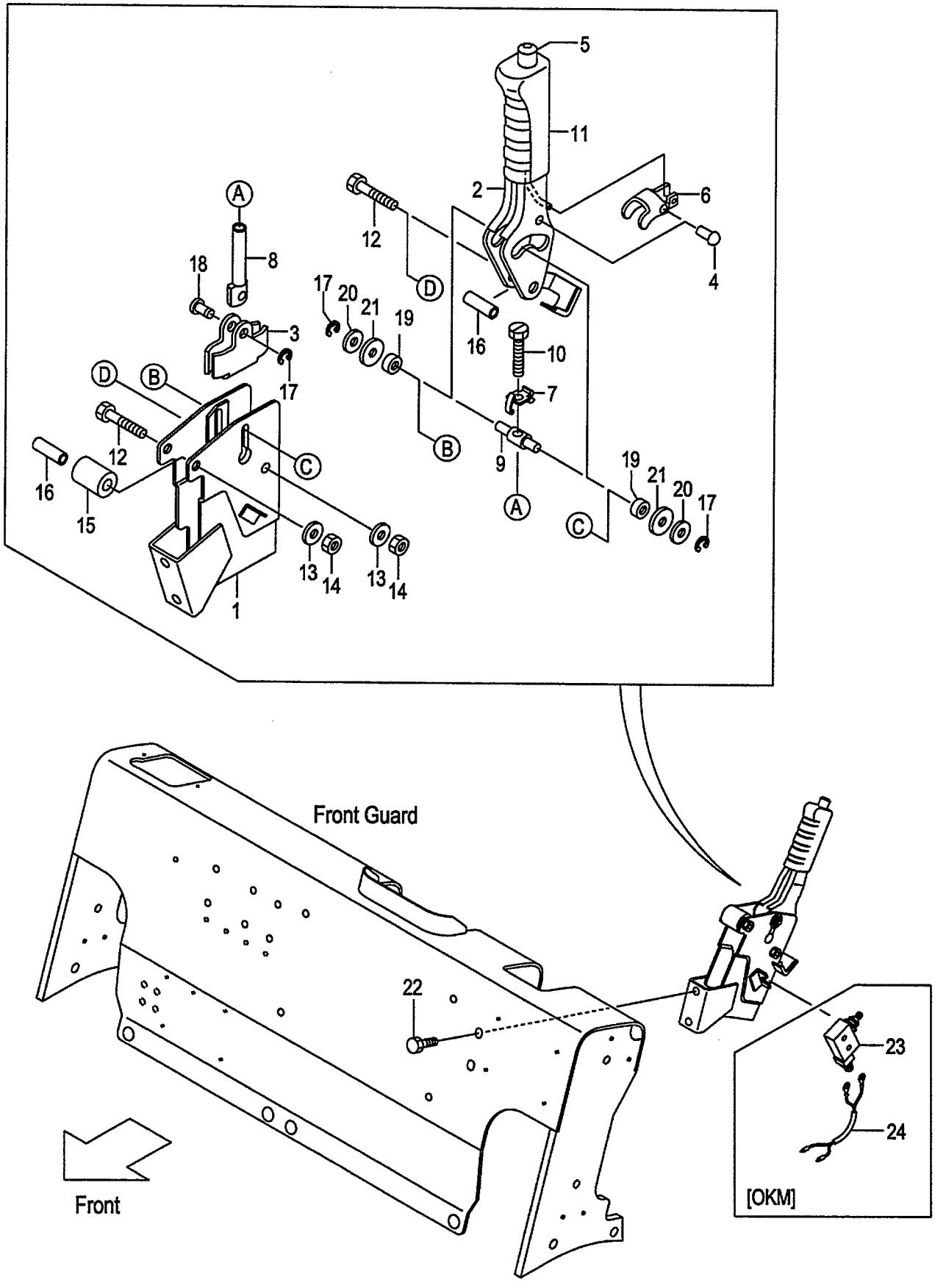

FIG.140
(F6025510)

A:FD20C18 FD20T18 FD25C18 FD25T18
B:FD20C7 FD20T7 FD25C7 FD25T7 FD20W7 FD25W7

Item No	Part No.	Mark	Description		Req'd	Remarks : Serial No.
A1	239A5-50101		LEVER-ASSY,BRAKE	ﾌﾞﾚｰｷﾚﾊﾞｰｱｯｾﾝ	1	INC.1-21
1	NO PART NO.		BRACKET,BRAKE-LEVER	ﾌﾞﾗｹｯﾄ	1	
2	NO PART NO.		LEVER	ﾚﾊﾞｰ	1	
3	27415-52151		BRACKET	ﾌﾞﾗｹｯﾄ	1	
4	230C5-55021		PIN	ﾋﾟﾝ	1	
5	230C5-55031		ROD,RELEASE	ﾛｯﾄﾞ	1	
6	230C5-55041		PLATE,LOCK	ﾌﾟﾚｰﾄ	1	
7	230C5-55051		PLATE,TENSION	ﾌﾟﾚｰﾄ	1	
8	230C5-55061		ROD,ADJUST	ﾛｯﾄﾞ	1	
9	230C5-55071		PIN,TRUNION	ﾋﾟﾝ	1	
10	230C5-55081		BOLT	ﾎﾞﾙﾄ	1	
11	NO PART NO.		GRIP	ｸﾞﾘｯﾌﾟ	1	
12	01100-08050		BOLT	ﾎﾞﾙﾄ	2	
13	02010-00008		WASHER	ﾜｯｼｬ	2	
14	01400-00008		NUT	ﾅｯﾄ	2	
15	222A5-52111		RUBBER,STOPPER	ﾗﾊﾞｰ	1	
16	230C5-55101		COLLAR	ｶﾗｰ	2	
17	214A5-52131		E-RING	Eﾘﾝｸﾞ	3	
18	230C5-55111		PIN	ﾋﾟﾝ	1	
19	230C5-55121		ROLLER,CAM	ﾛｰﾗ	2	
20	214A5-52121		WASHER	ﾜｯｼｬ	2	
21	214A5-52241		WASHER	ﾜｯｼｬ	2	
22	216G6-43231		BOLT	ﾎﾞﾙﾄ	2	
23	27912-62441		SWITCH,MICRO	ｽｲｯﾁ	1	[OKM]
24	535H3-82261		WIRE-HARNESS,SWITCH	ﾜｲﾔﾊｰﾈｽ	1	[OKM]

FIG.141 FRAME
(F6026110) フレーム

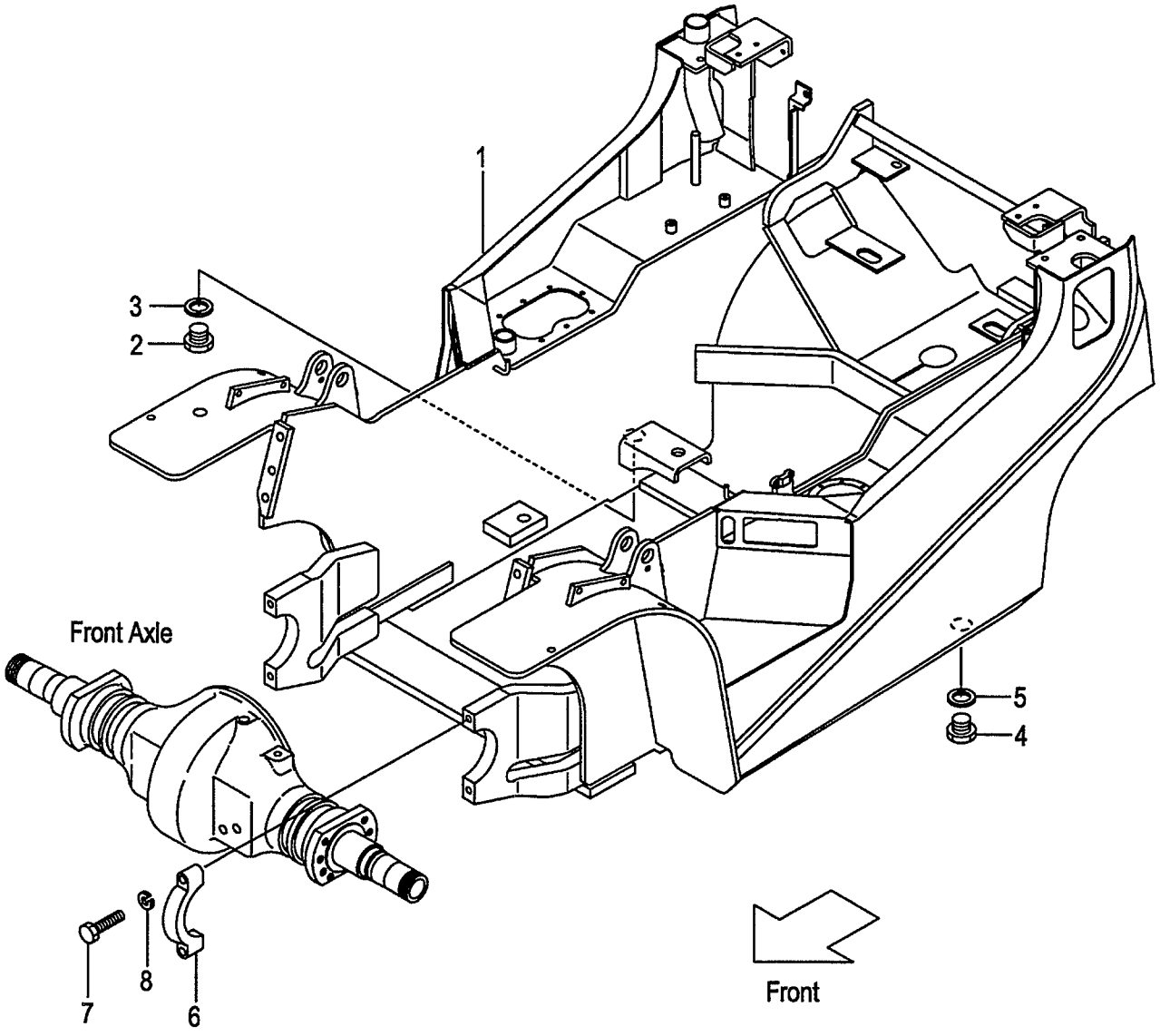

A:FD20C18 FD20T18 FD25C18 FD25T18
B:FD20C7 FD20T7 FD25C7 FD25T7
C:FD20W7 FD25W7

FIG.141
(F6026110)

Item No	Part No.	Mark	Description		Req'd	Remarks : Serial No.
1	NO PART NO.	#	FRAME	フレーム	1	
2	21237-52051		PLUG,DRAIN	ﾌﾟﾗｸﾞ	1	
3	21237-52062		PACKING	ﾊﾟｯｷﾝｸﾞ	1	
4	21237-52051		PLUG,DRAIN	ﾌﾟﾗｸﾞ	1	
5	21237-52062		PACKING	ﾊﾟｯｷﾝｸﾞ	1	
6	277P8-32701		CAP,SUPPORT,F-AXLE	ｷｬｯﾌﾟ	2	
7	01100-16065		BOLT	ﾎﾞﾙﾄ	4	
8	02010-00016		WASHER	ﾜｯｼｬ	4	

FIG.142 OIL TANK (CLUTCH)(TOR-CON)

(F60261A0) オイルタンク

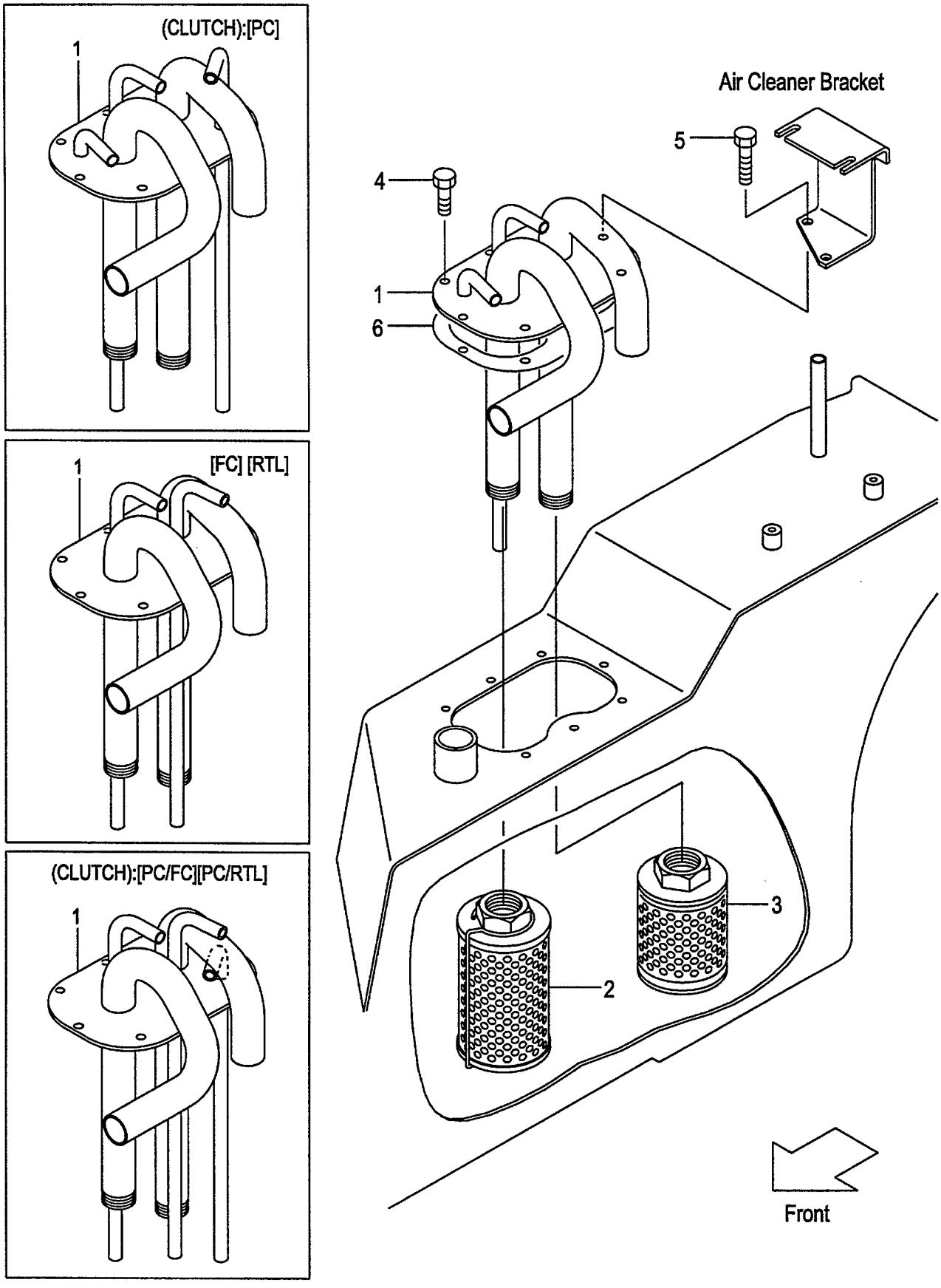

A:FD20C18 FD25C18 C:FD20C7 FD25C7
B:FD20T18 FD25T18 D:FD20T7 FD25T7

FIG.142
(F60261A0)

Item No	Part No.	Mark	Description		Req'd	Remarks : Serial No.
1	239A7-52001		PIPE,SUCTION	ﾊﾟｲﾌﾟ	1	
-	239H7-52001		PIPE,SUCTION	ﾊﾟｲﾌﾟ	1	A,C [PC]
-	539G3-72001		PIPE,SUCTION	ﾊﾟｲﾌﾟ	1	[FC][RTL]
-	538S3-72001		PIPE,SUCTION	ﾊﾟｲﾌﾟ	1	A,C [PC/FC][PC/RTL]
2	271A7-52301		FILTER,RETURN	ﾌｨﾙﾀ	1	
3	216G7-52051		FILTER,SUCTION	ﾌｨﾙﾀ	1	
4	229F2-22151		BOLT	ﾎﾞﾙﾄ	6	
5	229F2-22161		BOLT	ﾎﾞﾙﾄ	2	
6	216G2-22202		PACKING	ﾊﾟｯｷﾝｸﾞ	1	

FIG.143 OIL TANK (OIL CLUTCH)

(F60261B0) オイルタンク

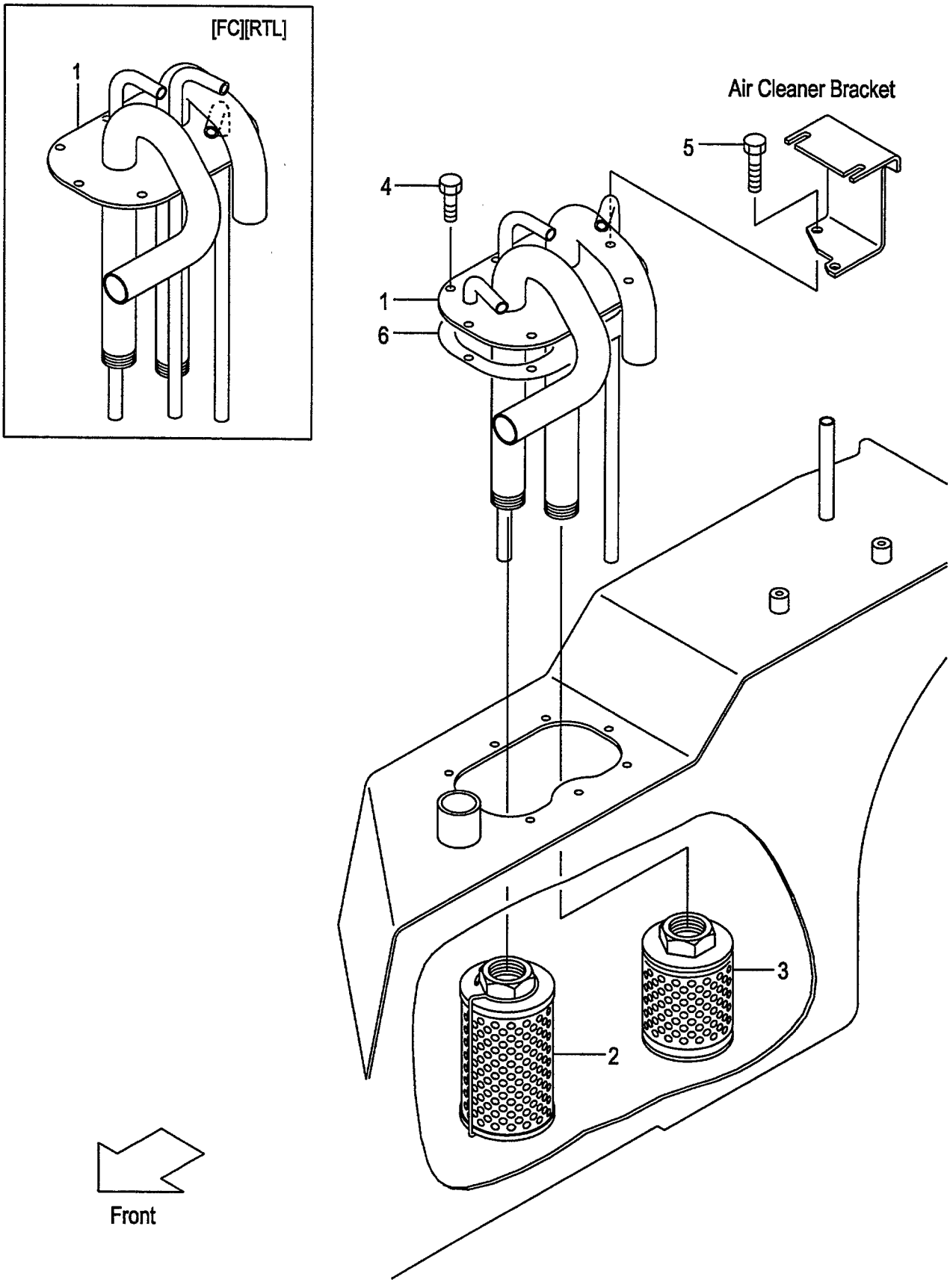

FIG.143
(F60261B0)

A:FD20W7 FD25W7

Item No	Part No.	Mark	Description		Req'd	Remarks : Serial No.
1	239H7-52001		PIPE,SUCTION	ﾊﾟｲﾌﾟ	1	
-	538S3-72001		PIPE,SUCTION	ﾊﾟｲﾌﾟ	1	[FC][RTL]
2	271A7-52301		FILTER,RETURN	ﾌｨﾙﾀ	1	
3	216G7-52051		FILTER,SUCTION	ﾌｨﾙﾀ	1	
4	229F2-22151		BOLT	ﾎﾞﾙﾄ	6	
5	229F2-22161		BOLT	ﾎﾞﾙﾄ	2	
6	216G2-22202		PACKING	ﾊﾟｯｷﾝｸﾞ	1	

FIG.144 OIL CAP & LEVEL
(F60261C0) オイルキャップ&レベル

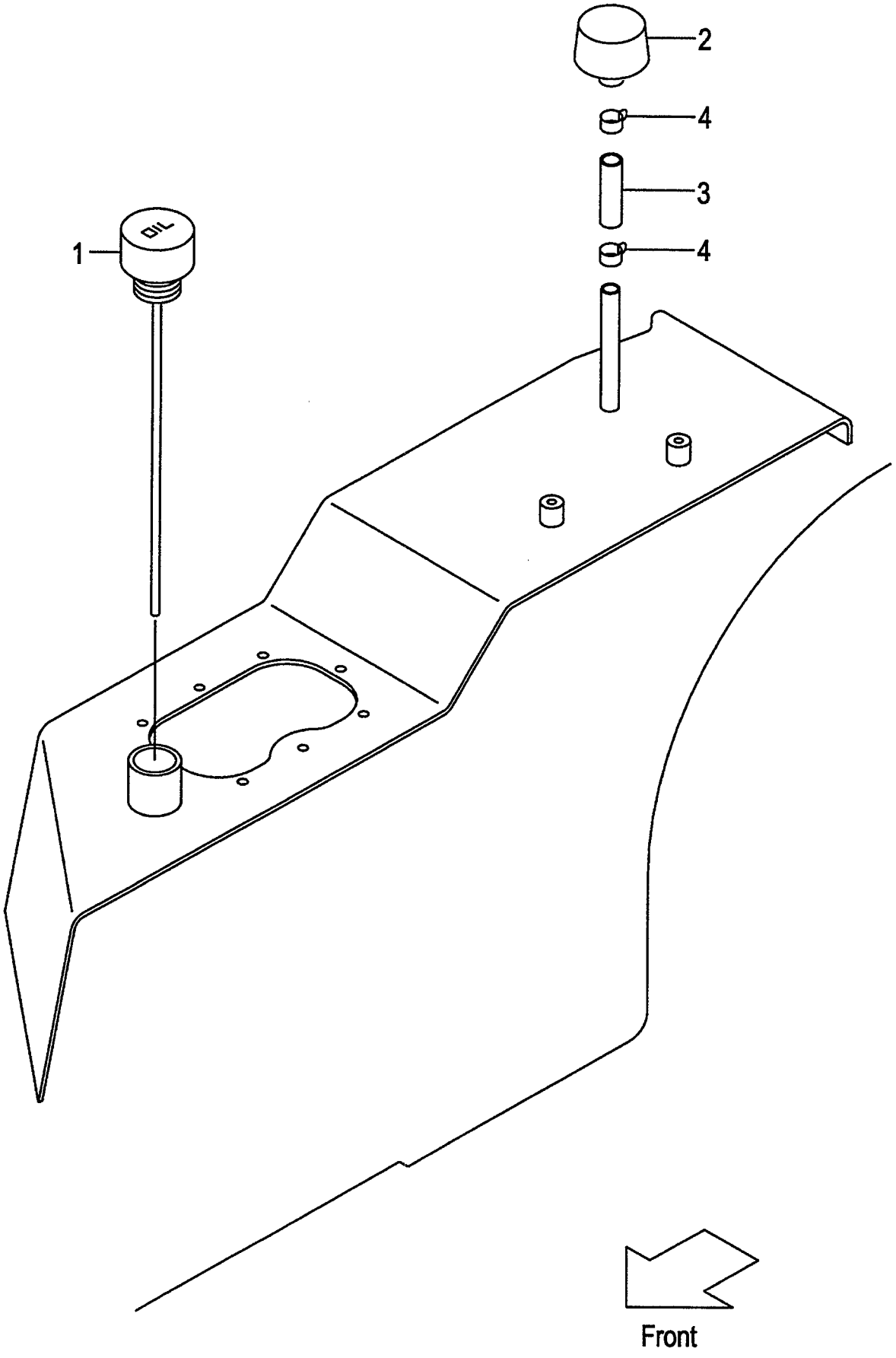

FIG.144
(F60261C0)

A:FD20C18 FD20T18 FD25C18 FD25T18
B:FD20C7 FD20T7 FD25C7 FD25T7 FD20W7 FD25W7

Item No	Part No.	Mark	Description		Req'd	Remarks : Serial No.
1	234A7-52101		CAP,OIL	ｷｬｯﾌﾟ	1	
2	216G7-52201		CAP,BREATHER	ｷｬｯﾌﾟ	1	
3	04710-04005		HOSE	ﾎｰｽ	1	
4	04914-00019		CLIP	ｸﾘｯﾌﾟ	2	

FIG.145 FUEL TANK
(F60261E0) フューエルタンク

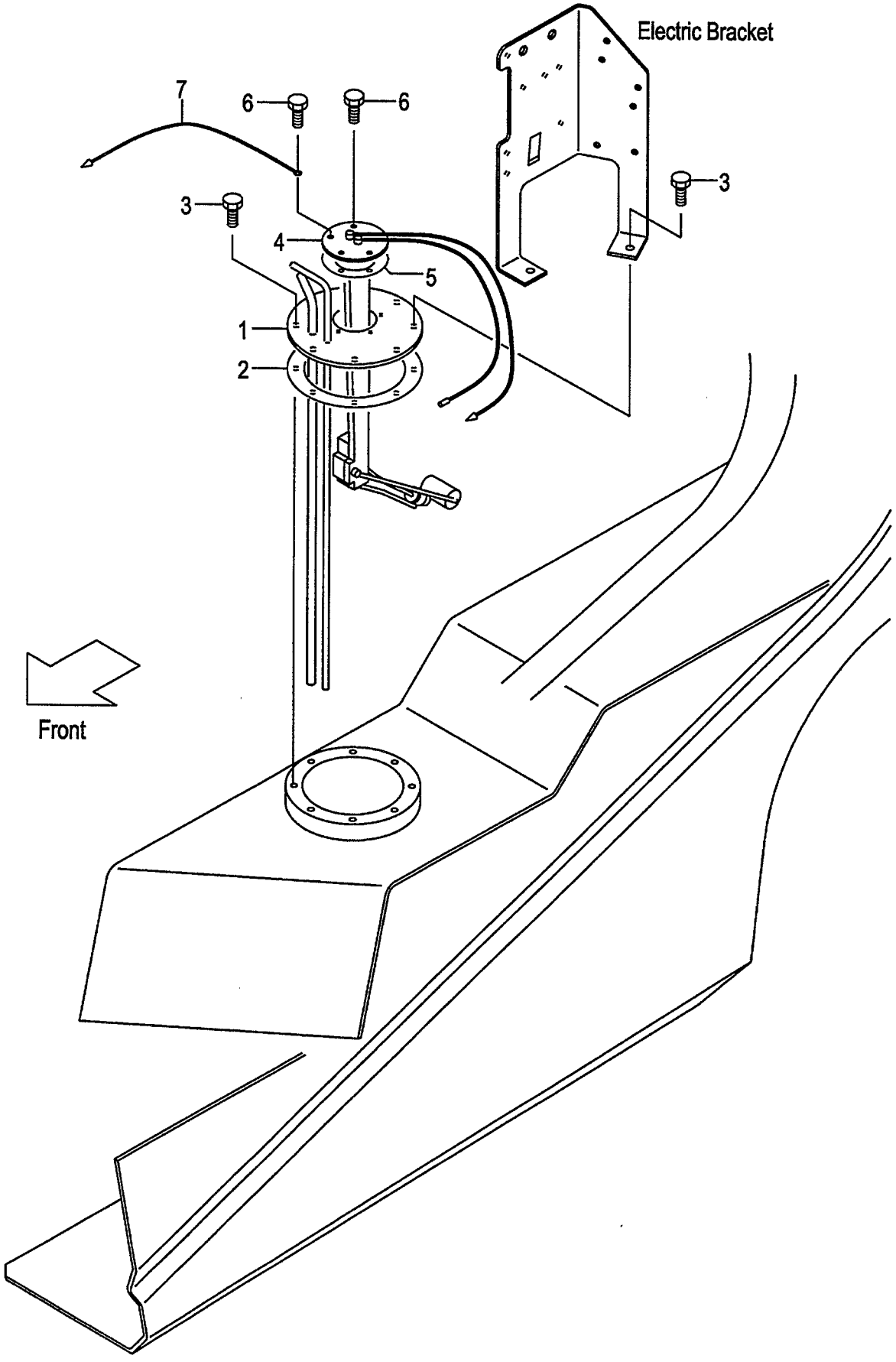

A:FD20C18 FD20T18 FD25C18 FD25T18
B:FD20C7 FD20T7 FD25C7 FD25T7 FD20W7 FD25W7

FIG.145
(F60261E0)

Item No	Part No.	Mark	Description		Req'd	Remarks : Serial No.
1	238G2-22101		PLATE,FUEL-TOP	ﾌﾟﾚｰﾄ	1	
2	272E7-52022		GASKET	ｶﾞｽｹｯﾄ	1	
3	01183-06016		BOLT	ﾎﾞﾙﾄ	8	
4	238G2-22021		UNIT,SENDING,FUEL	ﾕﾆｯﾄ	1	
-	238G2-22031		UNIT,SENDING,FUEL	ﾕﾆｯﾄ	1	[OKM]
5	229F2-22071		GASKET	ｶﾞｽｹｯﾄ	1	
6	229F2-22171		BOLT	ﾎﾞﾙﾄ	5	
7	25592-42121		WIRE	ﾜｲﾔ	1	

FIG.146 BALANCE WEIGHT

(F6026310) ﾊﾞﾗﾝｽｳｴｲﾄ

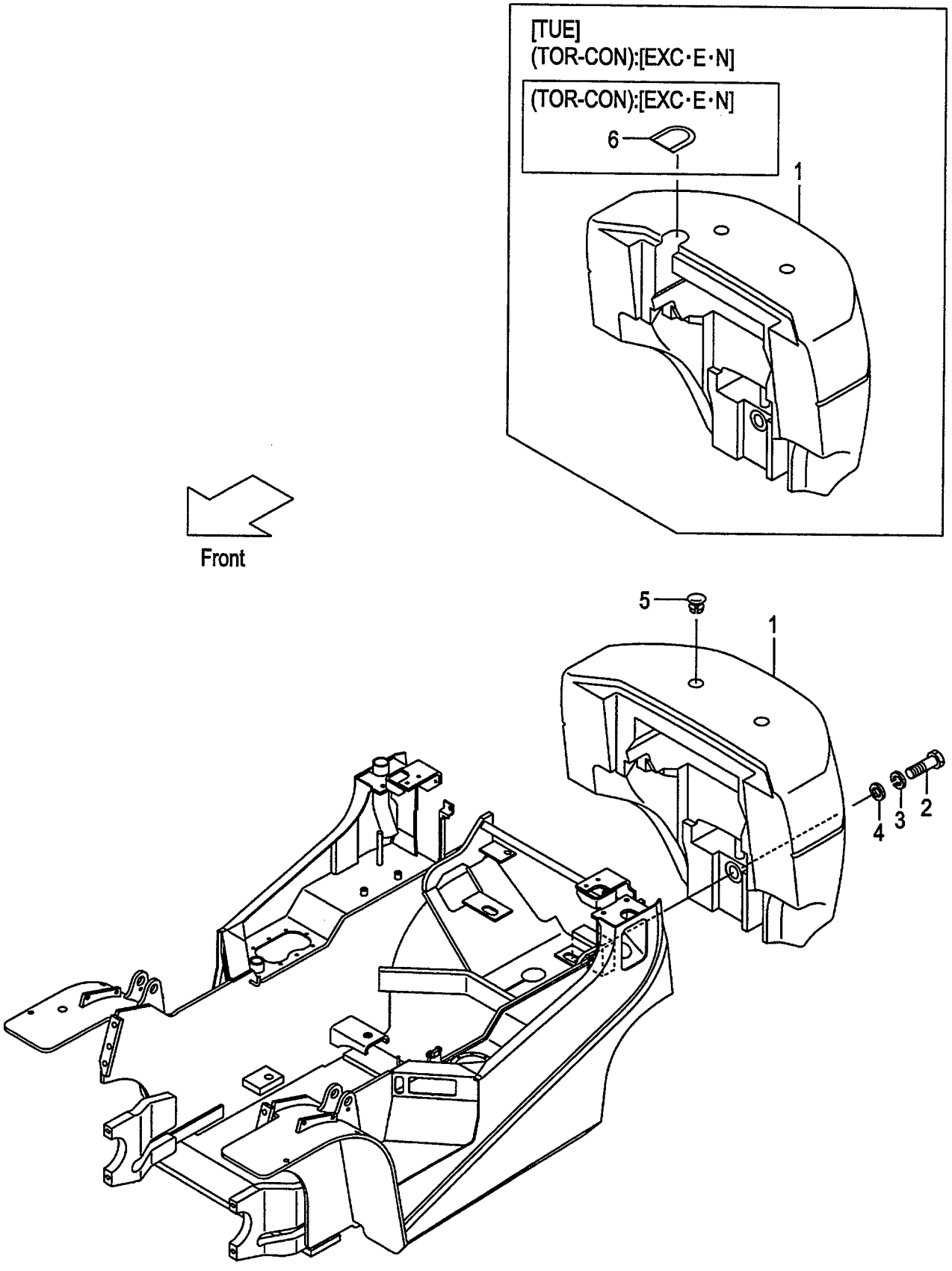

A:FD20C18 FD20T18 D:FD20T7 G:FD20W7
B:FD25C18 FD25T18 E:FD25C7 H:FD25W7
C:FD20C7 F:FD25T7

FIG.146
(F6026310)

Item No	Part No.	Mark	Description		Req'd	Remarks : Serial No.
1	NO PART NO.	#	WEIGHT,BALANCE	ｳｴｲﾄ	1	
2	01110-30150		BOLT	ﾎﾞﾙﾄ	1	
3	02010-00030		WASHER	ﾜｯｼｬ	1	
4	234A6-32001		WASHER	ﾜｯｼｬ	1	
5	216G6-32101		CAP	ｷｬｯﾌﾟ	2	
6	516G2-72051		COVER	ｶﾊﾞｰ	1	D,F
						[EXC][EXE][EXN]

FIG.147 BALANCE WEIGHT [RW]

(F6026320) ﾊﾞﾗﾝｽｳｴｲﾄ

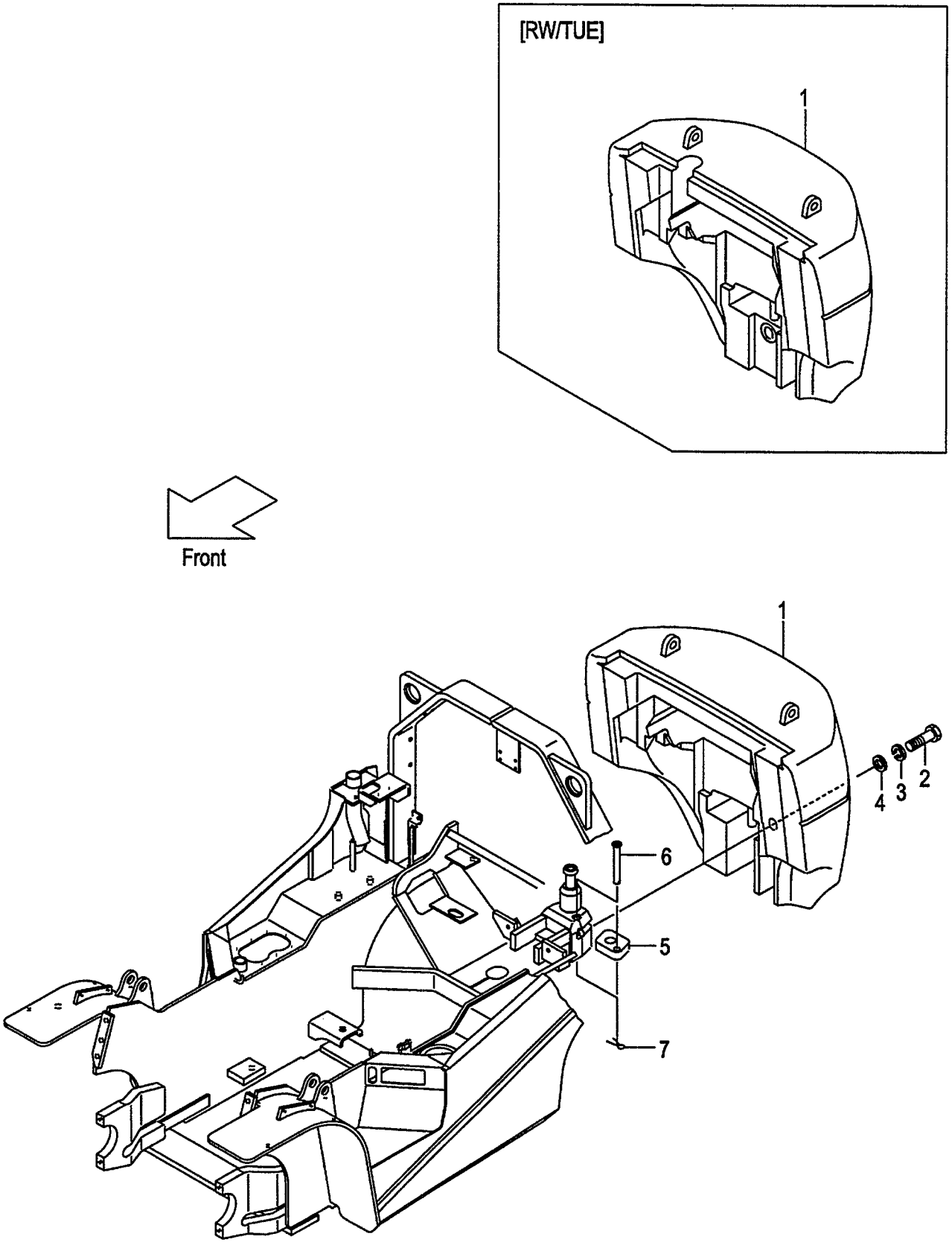

A:FD25C7 FD25T7 FD25W7

Item No	Part No.	Mark	Description		Req'd	Remarks : Serial No.
1	NO PART NO.	#	WEIGHT,BALANCE,2.5	ｳｴｲﾄ	1	[RW][RW/TUE]
2	01110-30090		BOLT	ﾎﾞﾙﾄ	1	[RW][RW/TUE]
3	02010-00030		WASHER	ﾜｯｼｬ	1	[RW][RW/TUE]
4	22216-30051		WASHER	ﾜｯｼｬ	1	[RW][RW/TUE]
5	52691-92211		STOPPER	ｽﾄｯﾊﾟ	1	[RW][RW/TUE]
6	52691-92221		PIN	ﾋﾟﾝ	1	[RW][RW/TUE]
7	02200-04040		PIN,COTTER	ﾋﾟﾝ	1	[RW][RW/TUE]

FIG.148 BALANCE WEIGHT [HC]

(F6026340) ﾊﾞﾗﾝｽｳｴｲﾄ

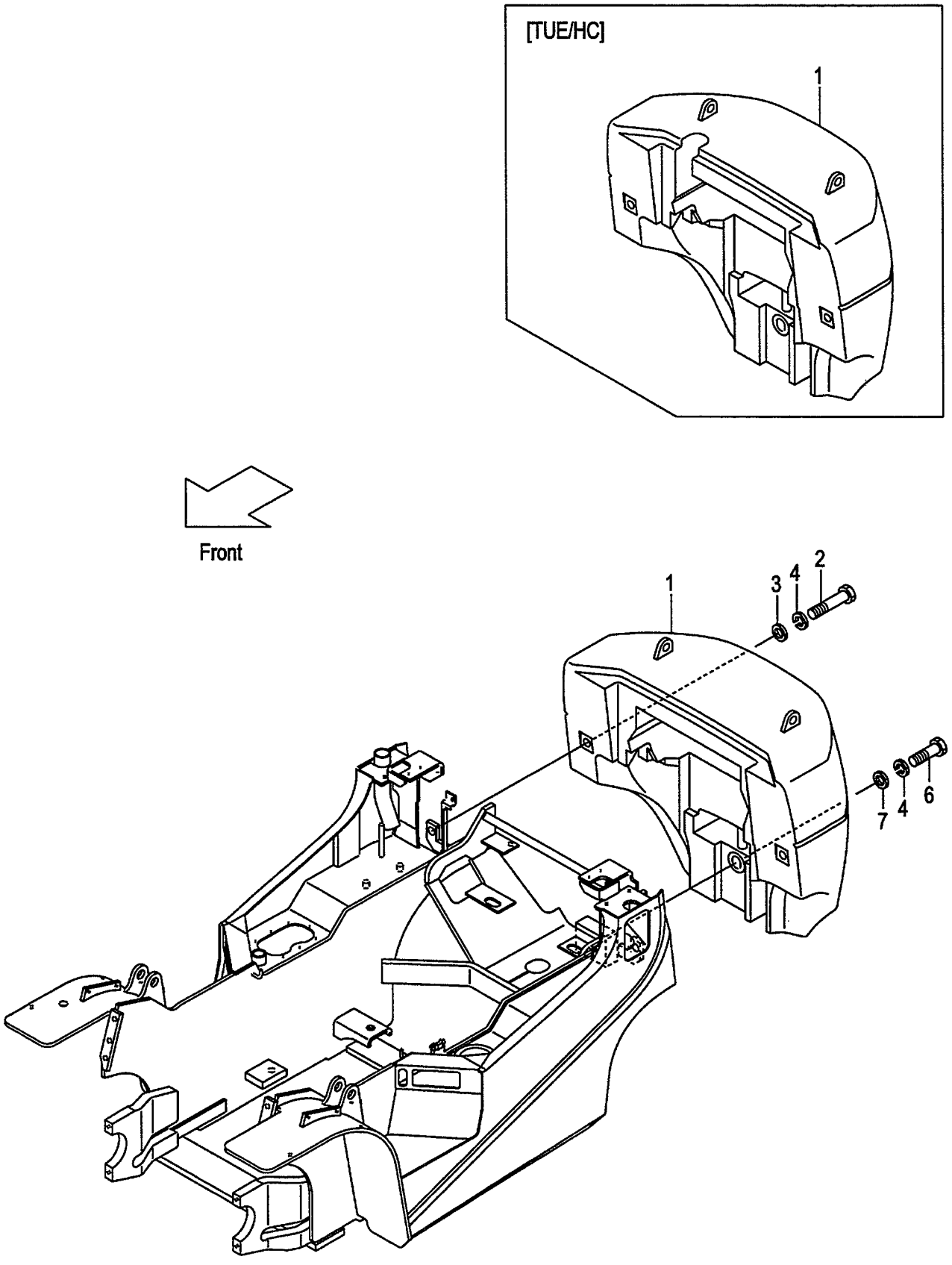

A:FD20C18 FD20T18 C:FD20C7 FD20T7 FD20W7
B:FD25C18 FD25T18 D:FD25C7 FD25T7 FD25W7

Item No	Part No.	Mark	Description		Req'd	Remarks : Serial No.
1	NO PART NO.	#	WEIGHT,BALANCE	ｳｴｲﾄ	1	[HC][TUE/HC]
2	01113-30230		BOLT	ﾎﾞﾙﾄ	2	A,C [HC][TUE/HC]
-	01113-30300		BOLT	ﾎﾞﾙﾄ	2	B,D [HC][TUE/HC]
3	225R6-32001		WASHER	ﾜｯｼｬ	2	[HC][TUE/HC]
4	02010-00030		WASHER	ﾜｯｼｬ	3	[HC][TUE/HC]
5	225R9-12101	+	DECAL,HOOK-CAUTION	ﾃﾞｶﾙ	1	[HC][TUE/HC]
6	01110-30150		BOLT	ﾎﾞﾙﾄ	1	[HC][TUE/HC]
7	234A6-32001		WASHER	ﾜｯｼｬ	1	[HC][TUE/HC]

FIG.149 FRONT GUARD

(F6026410) フロントガード

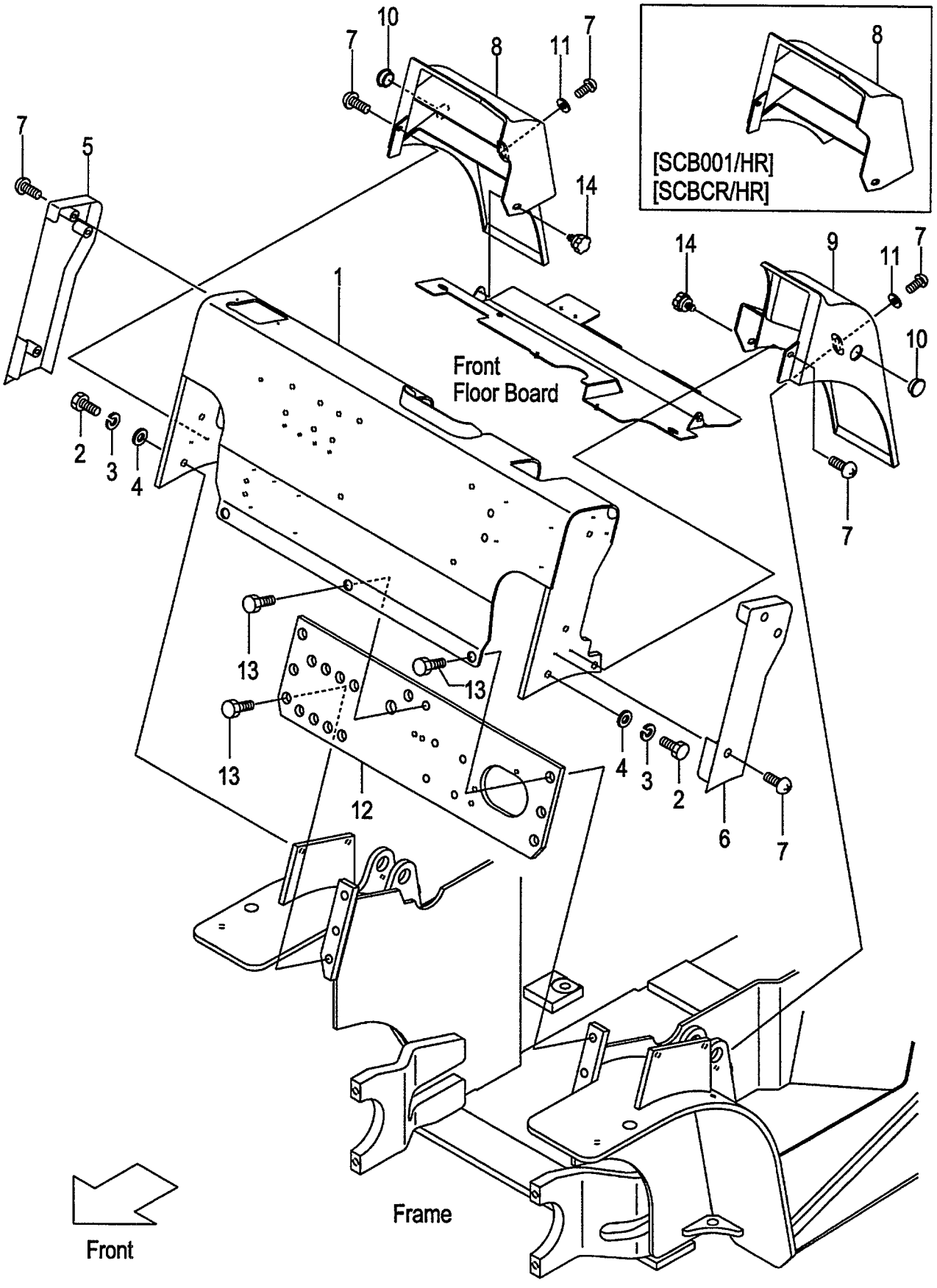

A:FD20C18 FD20T18 FD25C18 FD25T18 C:FD20T7 FD25T7
B:FD20C7 FD25C7 D:FD20W7 FD25W7

FIG.149
(F6026410)

Item No	Part No.	Mark	Description		Req'd	Remarks : Serial No.
1	239A6-40201		GUARD,FRONT	ｶﾞｰﾄﾞ	1	
-	539A2-60601		GUARD,FRONT	ｶﾞｰﾄﾞ	1	C [EXN]
-	539A9-90201		GUARD,FRONT	ｶﾞｰﾄﾞ	1	B,C,D [RRE]
2	01186-12030		BOLT	ﾎﾞﾙﾄ	4	
-	01109-12030		BOLT,STAINLESS	ﾎﾞﾙﾄ	4	[FC][SCB001/HR/FC] [SCBCR/HR/FC]
3	02013-00012		WASHER	ﾜｯｼｬ	4	[FC][SCB001/HR/FC] [SCBCR/HR/FC]
4	02001-00012		WASHER	ﾜｯｼｬ	4	[FC][SCB001/HR/FC] [SCBCR/HR/FC]
5	239A6-43001		COVER,SIDE,RH	ｶﾊﾞｰ	1	
6	239A6-43011		COVER,SIDE,LH	ｶﾊﾞｰ	1	
7	214A6-42252		SCREW	ｽｸﾘｭ	10	
8	239A6-43101		COVER,TILT-CYL,RH	ｶﾊﾞｰ	1	
-	539A5-30301		COVER,TILT-CYL,RH	ｶﾊﾞｰ	1	[SCB001/HR][SCBCR/HR] [SCB001/HR/FC][SCBCR/HR/FC]
9	239A6-43111		COVER,TILT-CYL,LH	ｶﾊﾞｰ	1	
10	514A5-12701		PLUG,HOLE	ﾌﾟﾗｸﾞ	2	
11	02000-20010		WASHER	ﾜｯｼｬ	2	
12	239A6-42001		PLATE,FRONT	ﾌﾟﾚｰﾄ	1	
13	216G6-43561		BOLT,FLANGE	ﾎﾞﾙﾄ	7	
14	256C5-12671		BOLT,KNOB	ﾎﾞﾙﾄ	2	

FIG.150 BONNET

(F6026420) ﾎﾞﾝﾈｯﾄ

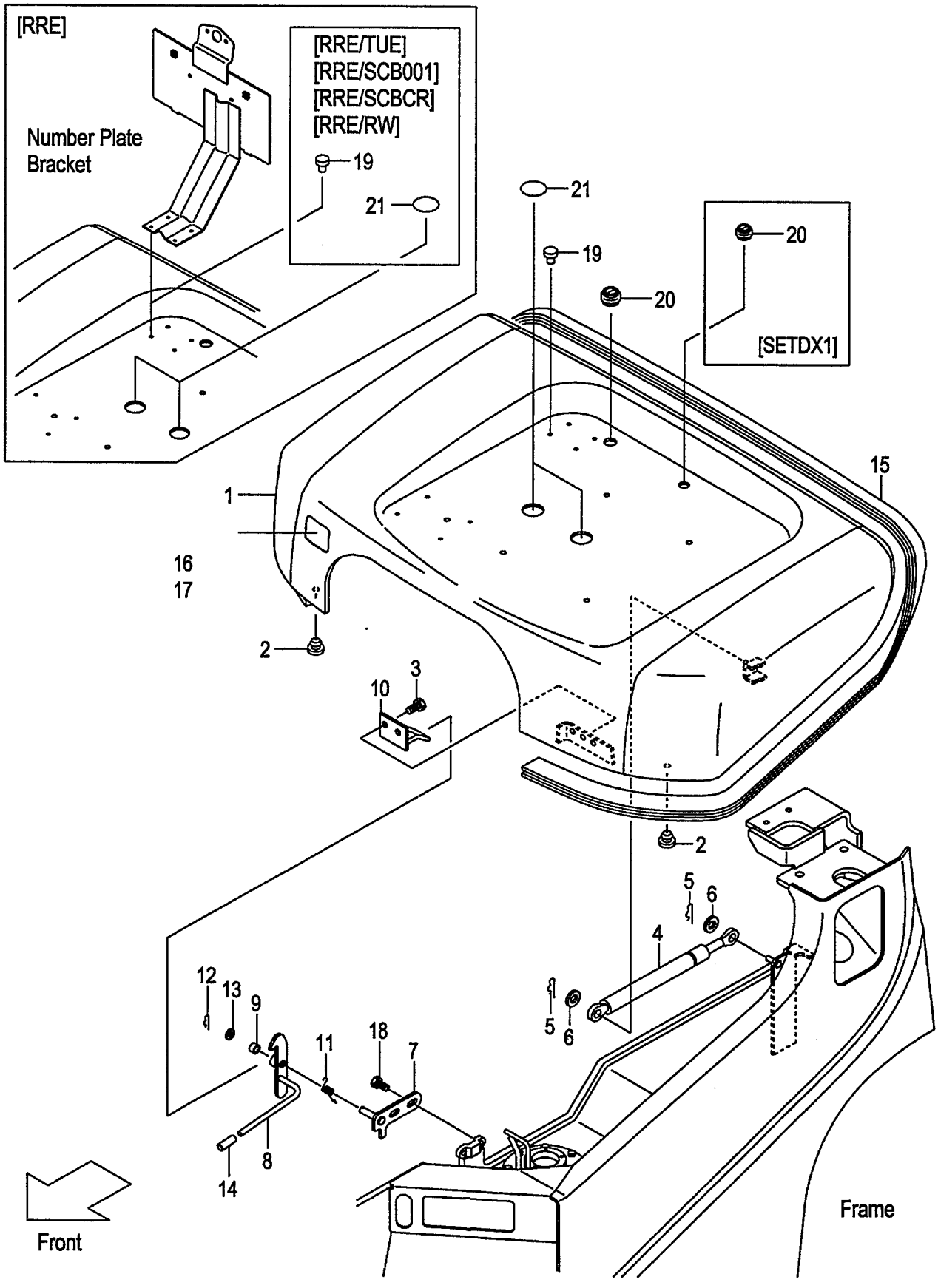

A:FD20C18 FD20T18 FD25C18 FD25T18
B:FD20C7 FD20T7 FD20W7
C:FD25C7 FD25T7 FD25W7

FIG.150
(F6026420)

Item No	Part No.	Mark	Description		Req'd	Remarks : Serial No.
1	239A6-40502		BONNET	ﾎﾞﾝﾈｯﾄ	1	
-	539A5-30602		BONNET	ﾎﾞﾝﾈｯﾄ	1	B,C [SCB001][SCBCR]
-	539C1-90402		BONNET	ﾎﾞﾝﾈｯﾄ	1	C [RW]
-	539A6-42101		BONNET	ﾎﾞﾝﾈｯﾄ	1	[SETDX1]
2	23456-42181		STOPPER,BONNET	ｽﾄｯﾊﾟ	2	
3	01183-08016		BOLT	ﾎﾞﾙﾄ	2	
4	535C2-60401		SPRING,GAS	ｽﾌﾟﾘﾝｸﾞ	1	
-	539A9-92201		SPRING,GAS	ｽﾌﾟﾘﾝｸﾞ	1	[RRE]
5	216H3-92171		PIN,SNAP	ﾋﾟﾝ	2	
6	02000-00008		WASHER	ﾜｯｼｬ	2	
A1	218G6-40521		CATCH-ASSY,BONNET	ﾎﾞﾝﾈｯﾄｷｬｯﾁｱｯｾﾝ	1	INC.7-13
7	218G6-42451		BRACKET	ﾌﾞﾗｹｯﾄ	1	
8	218G6-42471		LATCH	ﾗｯﾁ	1	
9	23655-22101		BUSHING	ﾌﾞｯｼﾝｸﾞ	1	
10	216G6-42451		HOOK	ﾌｯｸ	1	
11	216G6-42481		SPRING	ｽﾌﾟﾘﾝｸﾞ	1	
12	216H5-42141		PIN,SNAP	ﾋﾟﾝ	1	
13	02000-00010		WASHER	ﾜｯｼｬ	1	
14	216G6-52291		CAP	ｷｬｯﾌﾟ	1	
15	209P6-42841		RUBBER,SEAL,BONNET	ﾗﾊﾞｰ	1	
16	209P6-40401		INSULATOR	ｲﾝｼｭﾚｰﾀ	1	
-	539A6-42111		INSULATOR	ｲﾝｼｭﾚｰﾀ	1	[SETDX1]
17	216G6-42541		CLIP	ｸﾘｯﾌﾟ	10	
18	01185-08020		BOLT	ﾎﾞﾙﾄ	2	
19	25596-42361		RIVET,NYLON	ﾘﾍﾞｯﾄ	4	(WITHOUT RRE)
-	25596-42361		RIVET,NYLON	ﾘﾍﾞｯﾄ	4	[RRE/TUE]
-	25596-42361		RIVET,NYLON	ﾘﾍﾞｯﾄ	4	B,C [RRE/SCB001][RRE/SCBCR]
-	25596-42361		RIVET,NYLON	ﾘﾍﾞｯﾄ	4	C [RRE/RW]
20	27662-62711		GROMMET	ｸﾞﾛﾒｯﾄ	1	
-	27662-63041		GROMMET	ｸﾞﾛﾒｯﾄ	1	[SETDX1]
21	239A6-42251		SHEET,BONNET	ｼｰﾄ	2	(WITHOUT RRE)
-	239A6-42251		SHEET,BONNET	ｼｰﾄ	2	[RRE/TUE]
-	239A6-42251		SHEET,BONNET	ｼｰﾄ	2	B,C [RRE/SCB001][RRE/SCBCR]
-	239A6-42251		SHEET,BONNET	ｼｰﾄ	2	C [RRE/RW]

FIG.151 RADIATOR COVER

(F6026430) ﾗｼﾞｴｰﾀｶﾊﾞｰ

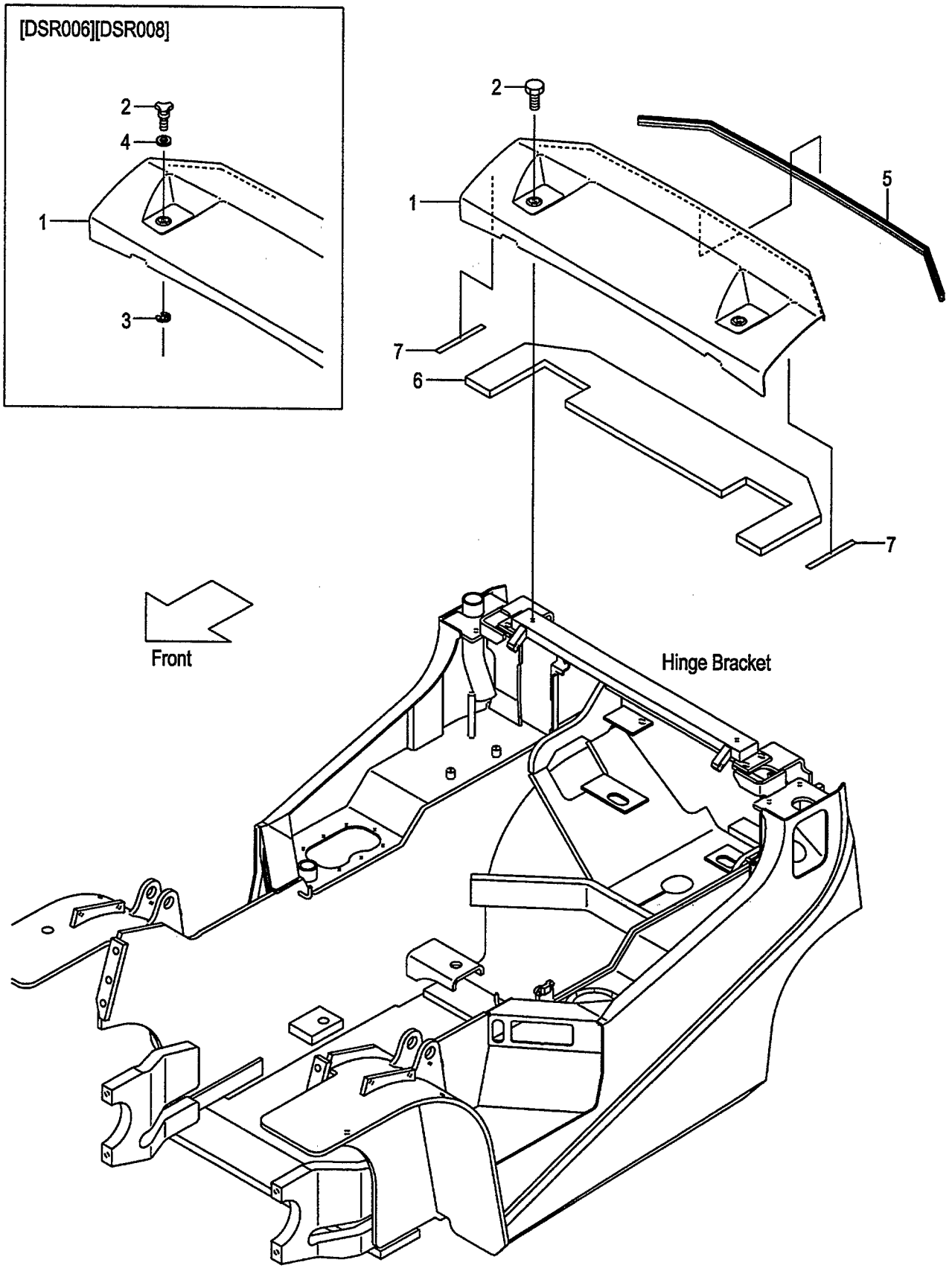

FIG.151
(F6026430)

A:FD20C18 FD20T18 FD25C18 FD25T18 C:FD20T7 FD25T7
B:FD20C7 FD25C7 D:FD20W7 FD25W7

Item No	Part No.	Mark	Description		Req'd	Remarks : Serial No.
1	239A6-40301		COVER,RADIATOR	ｶﾊﾞｰ	1	
-	539A5-42351		COVER,RADIATOR	ｶﾊﾞｰ	1	B,C,D [AW061]
2	01181-08016		BOLT	ﾎﾞﾙﾄ	2	
-	222A6-42451		BOLT,KNOB	ﾎﾞﾙﾄ	2	[DSR006][DSR008]
3	222A6-42461		E-RING	Eﾘﾝｸﾞ	2	[DSR006][DSR008]
4	02000-00008		WASHER	ﾜｯｼｬ	2	[DSR006][DSR008]
5	214A6-42121		RUBBER,SEAL	ﾗﾊﾞｰ	1	
6	239A6-42291		RUBBER,RADIATOR-COV.	ﾗﾊﾞｰ	1	
7	234A6-43121		RUBBER	ﾗﾊﾞｰ	2	

FIG.152 RADIATOR COVER [RW]

(F6026440) ﾗｼﾞｴｰﾀｶﾊﾞｰ

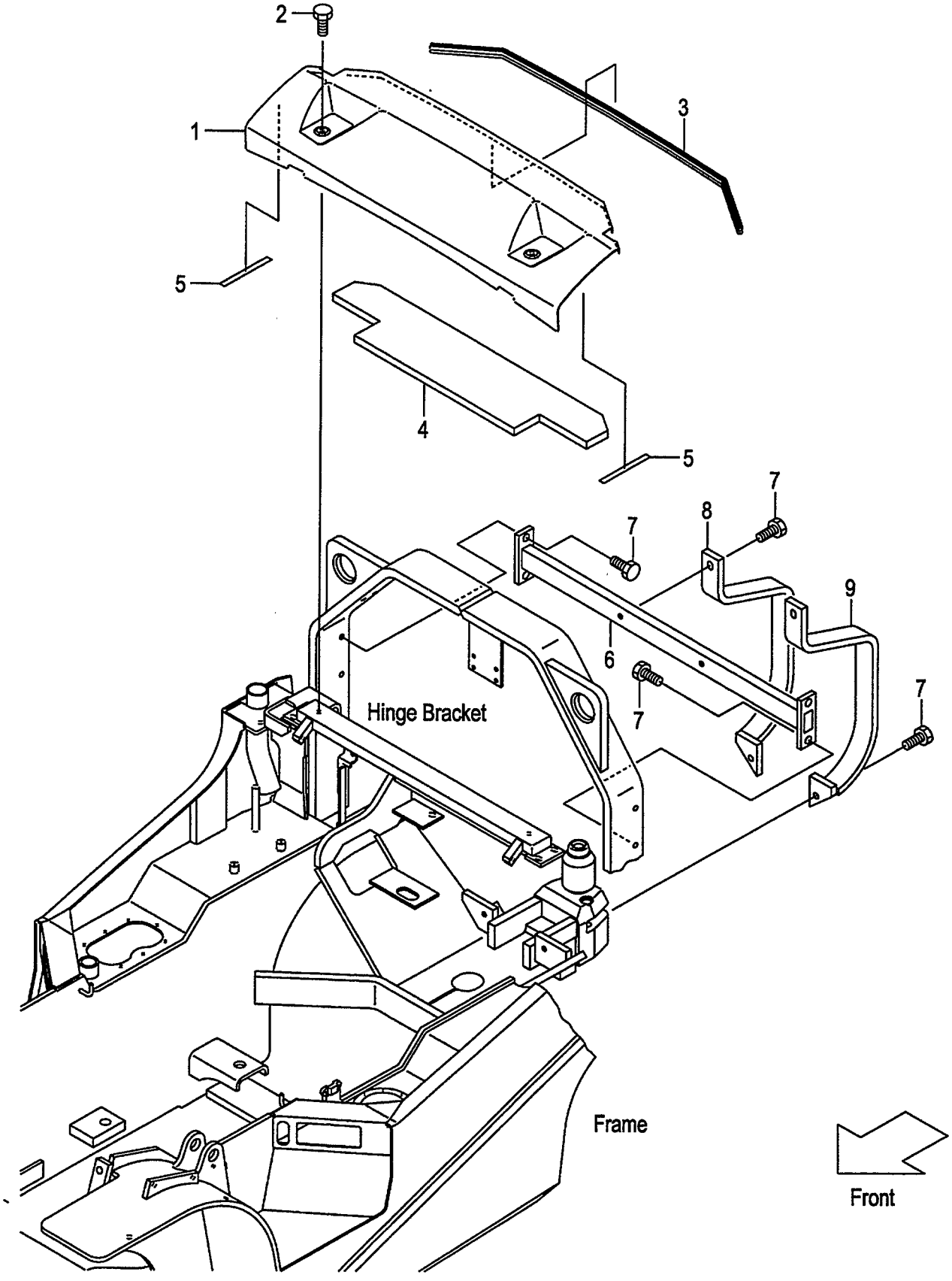

FIG.152
(F6026440)

A:FD25C7 FD25T7 FD25W7

Item No	Part No.	Mark	Description		Req'd	Remarks : Serial No.
1	539C1-92301		COVER,RADIATOR	ｶﾊﾞｰ	1	[RW]
2	01181-08016		BOLT	ﾎﾞﾙﾄ	2	[RW]
3	214A6-42121		RUBBER,SEAL	ﾗﾊﾞｰ	1	[RW]
4	539C1-92311		RUBBER,RADIATOR-COV.	ﾗﾊﾞｰ	1	[RW]
5	234A6-43121		RUBBER	ﾗﾊﾞｰ	2	[RW]
6	539C1-92401		BAR,TIE	ﾊﾞｰ	1	[RW]
7	01186-12035		BOLT	ﾎﾞﾙﾄ	8	[RW]
8	539C1-92541		GUARD,MUFFLER,RH	ｶﾞｰﾄﾞ	1	[RW]
9	539C1-92551		GUARD,MUFFLER,LH	ｶﾞｰﾄﾞ	1	[RW]

FIG.153 RADIATOR COVER [SCB001][SCBCR]

(F6026460) ﾗｼﾞｴｰﾀｶﾊﾞｰ

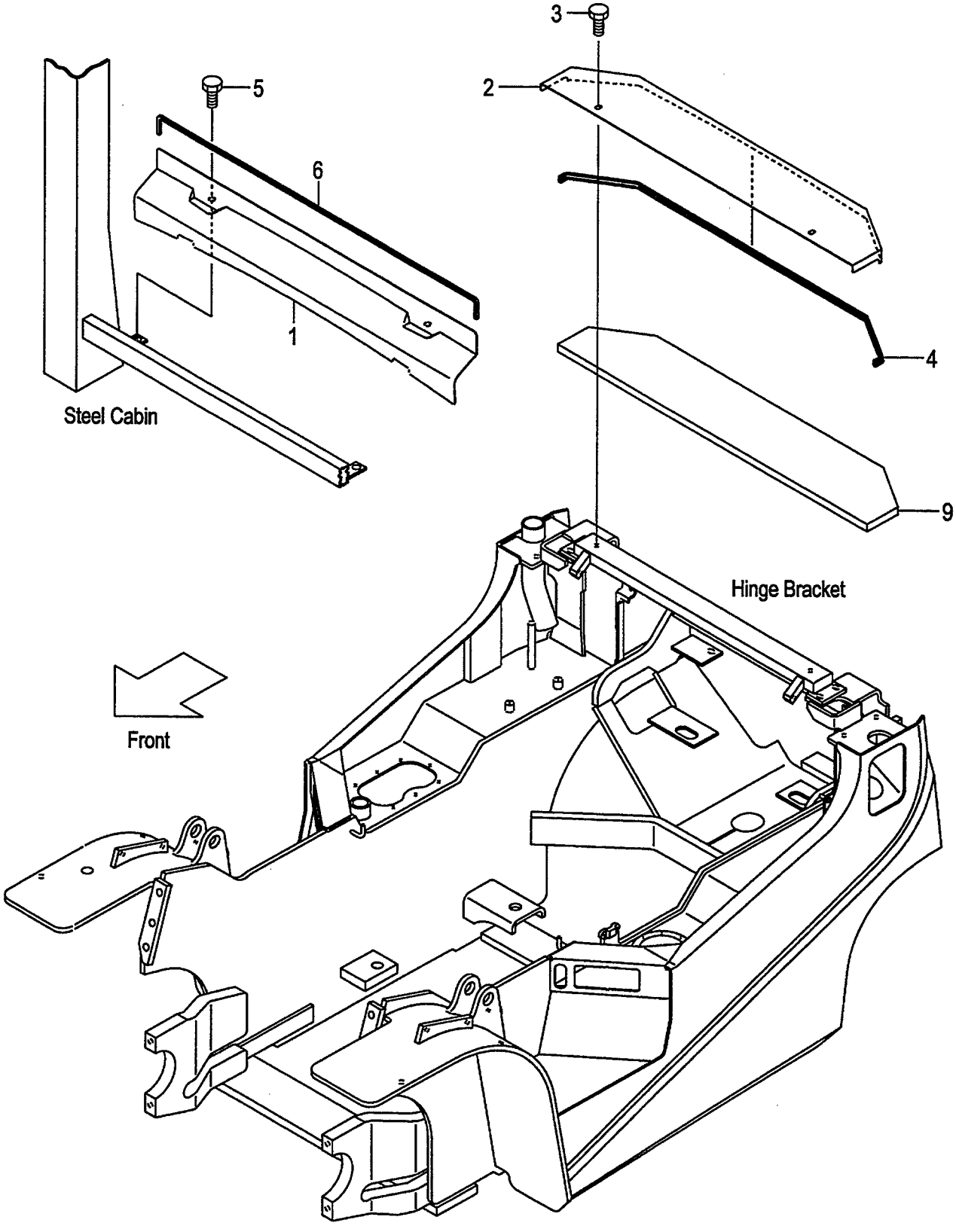

FIG.153
(F6026460)

A:FD20C7 FD20T7 FD25C7 FD25T7 FD20W7 FD25W7

Item No	Part No.	Mark	Description	Req'd	Remarks : Serial No.
1	539A5-32311		COVER,RADIATOR,FRONT カバー	1	[SCB001][SCBCR]
2	539A5-32201		COVER,RADIATOR,REAR カバー	1	[SCB001]
-	539A7-62201		COVER,RADIATOR,REAR カバー	1	[SCBCR]
3	01181-08016		BOLT ボルト	2	[SCB001][SCBCR]
4	214T6-42091		RUBBER,SEAL ラバー	1	[SCB001][SCBCR]
5	01185-08020		BOLT ボルト	2	[SCB001][SCBCR]
6	25816-42761		RUBBER,SEAL ラバー	1	[SCB001][SCBCR]
7	534A5-32651	+	WIRE,LEAD,KEY-SWITCH ワイヤ	1	[SCB001][SCBCR]
8	229F2-42141	+	WIRE-HARNESS,R-COMB. ワイヤハーネス	1	[SCB001][SCBCR]
9	539A5-32541		RUBBER,RADIATOR-COV. ラバー	1	[SCB001][SCBCR]

FIG.154 BONNET HINGE

(F6026470) ﾎﾞﾝﾈｯﾄﾋﾝｼﾞ

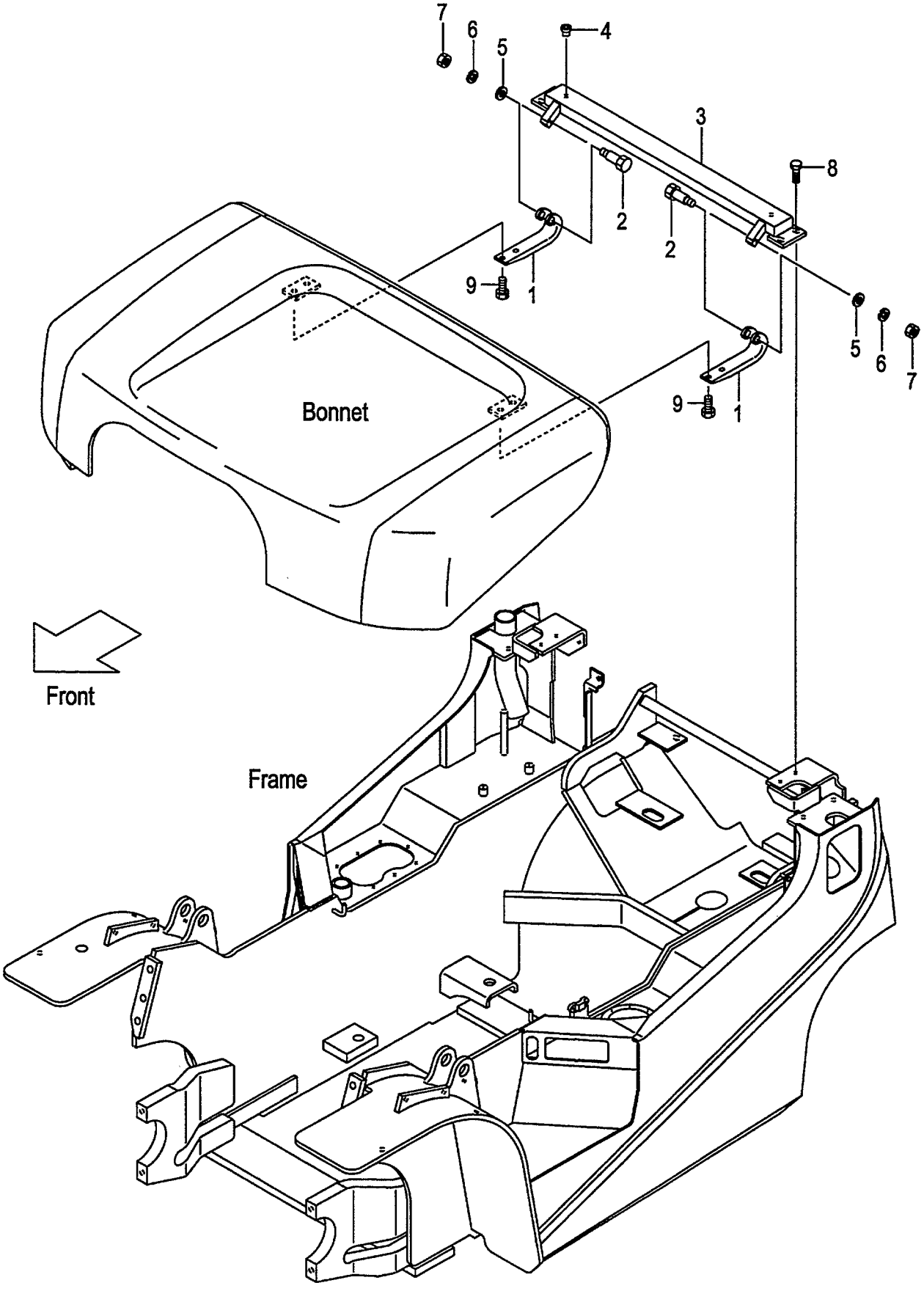

A:FD20C18 FD20T18 FD25C18 FD25T18
B:FD20C7 FD20T7 FD25C7 FD25T7
C:FD20W7 FD25W7

FIG.154
(F6026470)

Item No	Part No.	Mark	Description		Req'd	Remarks : Serial No.
1	216G6-42911		HINGE	ﾋﾝｼﾞ	2	
2	216G6-42931		BOLT	ﾎﾞﾙﾄ	2	
3	218G6-42302		BRACKET,HINGE	ﾌﾞﾗｹｯﾄ	1	
-	539H6-52202		BRACKET,HINGE	ﾌﾞﾗｹｯﾄ	1	C [DSR006][DSR008]
4	514A5-12011		RIVET,POP	ﾘﾍﾞｯﾄ	2	
5	02000-00006		WASHER	ﾜｯｼｬ	2	
6	02010-00006		WASHER	ﾜｯｼｬ	2	
7	01400-00006		NUT	ﾅｯﾄ	2	
8	01186-10020		BOLT	ﾎﾞﾙﾄ	4	
9	01183-08016		BOLT	ﾎﾞﾙﾄ	4	

FIG.155 FLOOR BOARD

(F6026480) ﾌﾛｱﾎﾞｰﾄﾞ

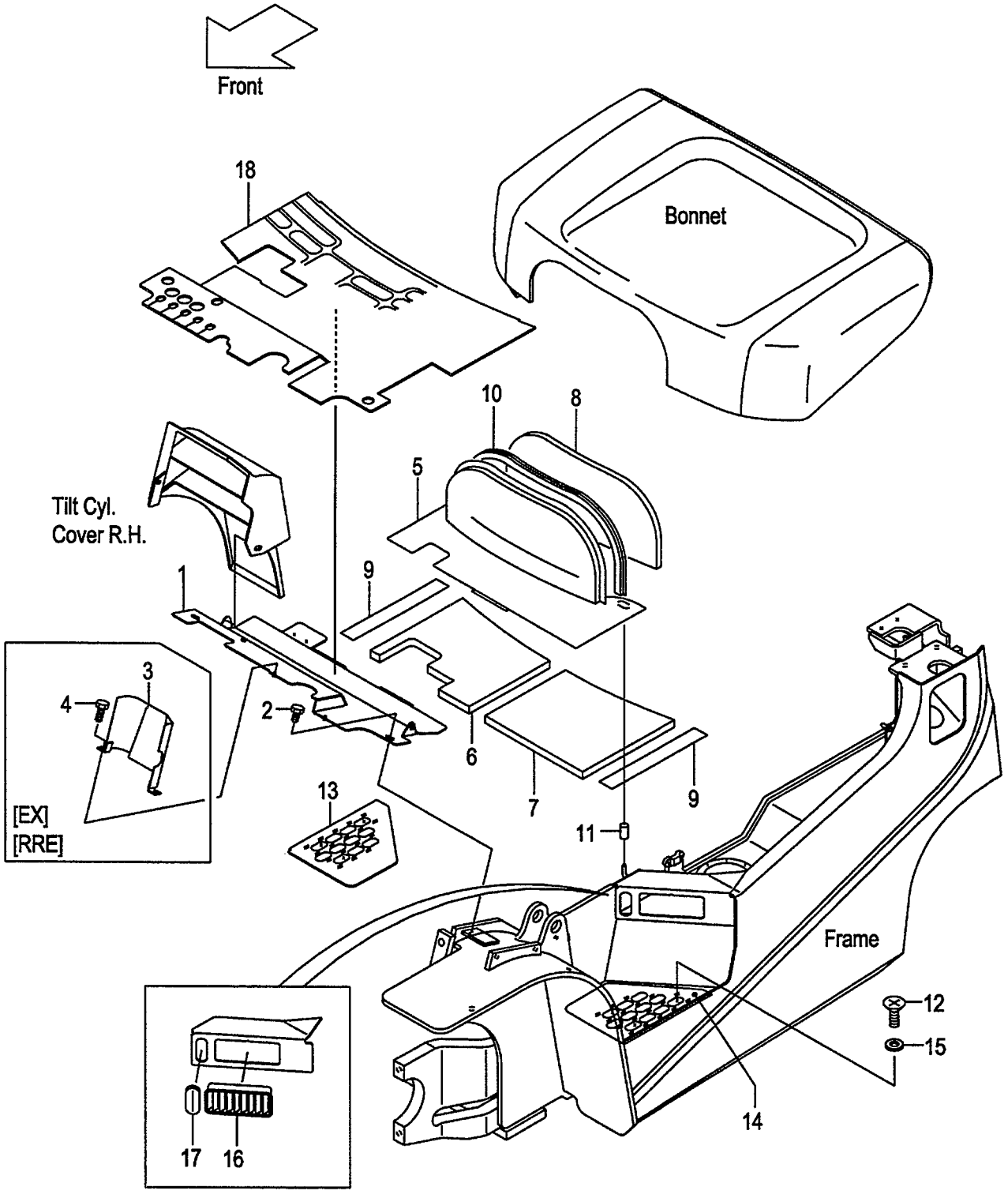

A:FD20C18 FD25C18 D:FD20T7 FD25T7
B:FD20T18 FD25T18 E:FD20W7 FD25W7
C:FD20C7 FD25C7

FIG.155
(F6026480)

Item No	Part No.	Mark	Description		Req'd	Remarks : Serial No.
1	239A6-50112		BOARD,FLOOR,FRONT	ﾎﾞｰﾄﾞ	1	
2	01181-08016		BOLT	ﾎﾞﾙﾄ	2	
3	239A6-52601		COVER,FRONT	ｶﾊﾞｰ	1	C
						[EX]
-	239A6-52601		COVER,FRONT	ｶﾊﾞｰ	1	A,C,E
						[RRE]
-	239B6-52601		COVER,FRONT	ｶﾊﾞｰ	1	D
						[EX]
-	239B6-52601		COVER,FRONT	ｶﾊﾞｰ	1	B,D
						[RRE]
4	01186-06012		BOLT	ﾎﾞﾙﾄ	2	C,D
						[EX]
-	01186-06012		BOLT	ﾎﾞﾙﾄ	2	[RRE]
5	239A6-50302		BOARD,FLOOR,REAR	ﾎﾞｰﾄﾞ	1	A,C,E
-	239B6-50302		BOARD,FLOOR,REAR	ﾎﾞｰﾄﾞ	1	B,D
6	239A6-52131		INSULATOR,REAR,RH	ｲﾝｼｭﾚｰﾀ	1	
7	239A6-52141		INSULATOR,REAR,LH	ｲﾝｼｭﾚｰﾀ	1	
8	216G6-52231		INSULATOR,REAR	ｲﾝｼｭﾚｰﾀ	1	
9	239A6-52171		RUBBER,SEAL	ﾗﾊﾞｰ	2	
10	216G6-52271		EDGING	ｴｯｼﾞﾝｸﾞ	1	
11	216G6-52291		CAP	ｷｬｯﾌﾟ	2	
12	214A6-42911		SCREW	ｽｸﾘｭ	6	
13	234A6-42042		STEP,NON-SKID,RH	ｽﾃｯﾌﾟ	1	
14	234A6-42072		STEP,NON-SKID,LH	ｽﾃｯﾌﾟ	1	
15	02000-20010		WASHER	ﾜｯｼｬ	6	
16	230C1-02041		COVER,AIR-INTAKE	ｶﾊﾞｰ	2	
17	209P7-42161		BOOT,LEVER	ﾌﾞｰﾂ	1	
18	239A6-52231		MAT,FLOOR	ﾏｯﾄ	1	A,C,E
-	239B6-52231		MAT,FLOOR	ﾏｯﾄ	1	B,D

FIG.156 TRAY
(F6026490) トレー

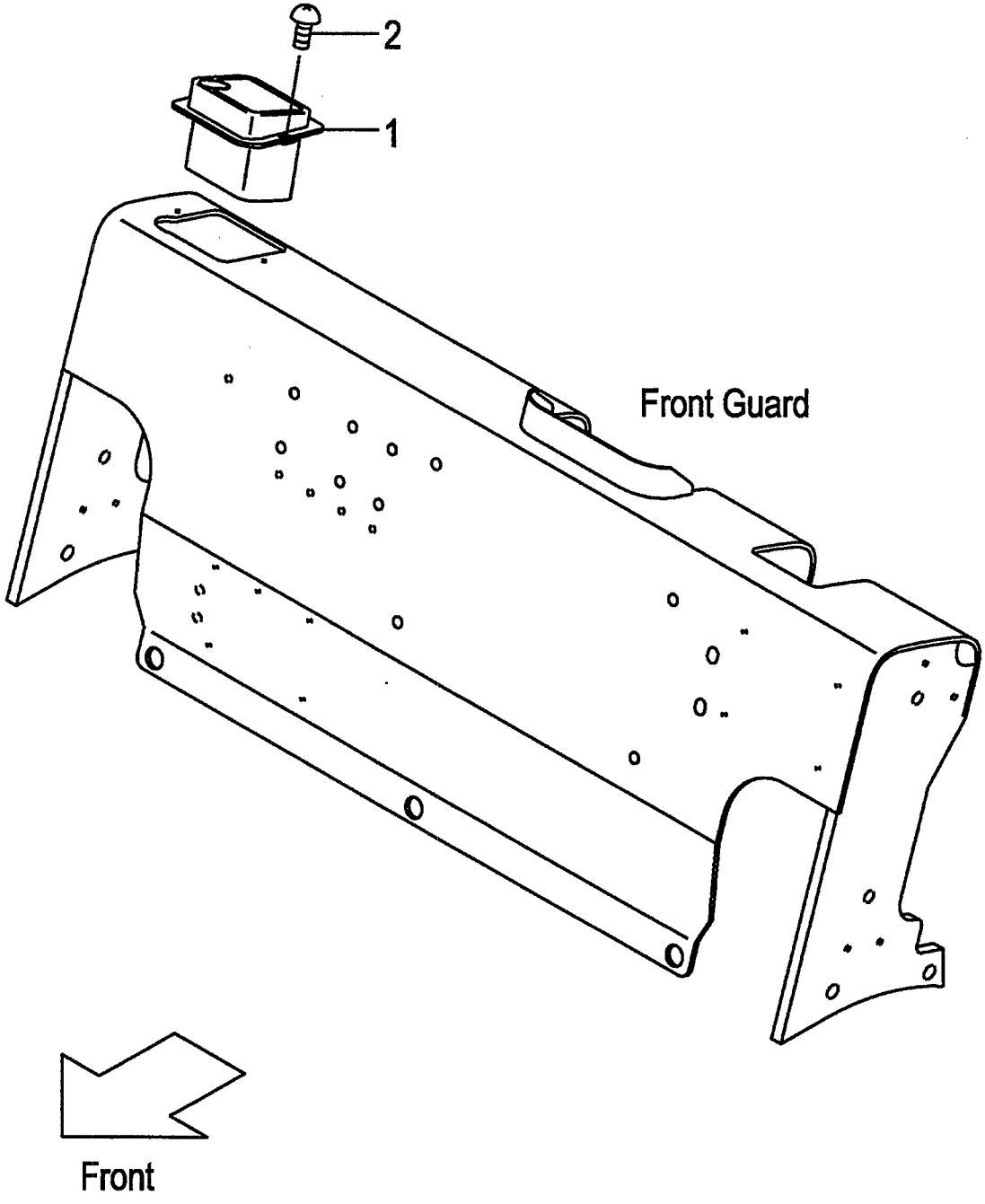

A:FD20C18 FD20T18 FD25C18 FD25T18
B:FD20C7 FD20T7 FD25C7 FD25T7 FD20W7 FD25W7

FIG.156
(F6026490)

Item No	Part No.	Mark	Description	Req'd	Remarks : Serial No.
1	216G9-32001		TRAY トレー	1	
2	214A6-42252		SCREW スクリュ	2	

FIG.157 TRAY [AW061][AW071][RWL][BB SW][BBASW]

(F60264A0) トレー

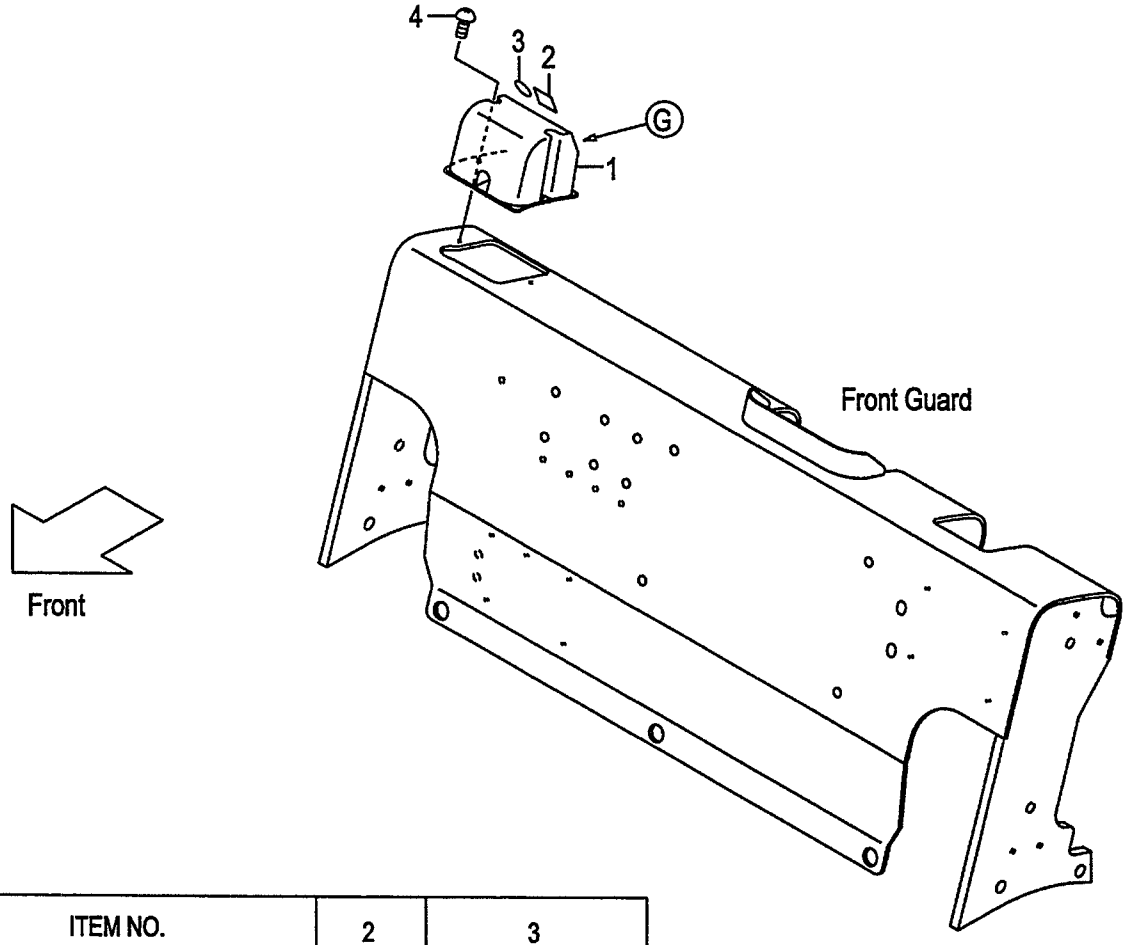

ITEM NO.		2		3			
HOLE		A	B	C	D	E	F
OPTION	[AW]	○	○	○	○		○
	[RWL]	○		○	○	○	
	[BB SW][BBASW]	○	○	○	○		○
	[AW/RWL]	○		○	○		
	[AW/BB SW·BBASW]	○	○		○		○
	[RWL/BB SW·BBASW]	○		○	○		
	[AW/RWL/BB SW·BBASW]	○			○		

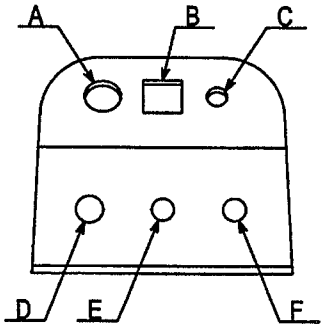

View from G

A:FD20C18 FD20T18 FD25C18 FD25T18
B:FD20C7 FD20T7 FD25C7 FD25T7 FD20W7 FD25W7

FIG.157
(F60264A0)

Item No	Part No.	Mark	Description		Req'd	Remarks : Serial No.
1	516G1-42251		BOX,SWITCH	ﾎﾞｯｸｽ	1	[AW061][AW071][RWL][BB SW] [BBASW]
-	516G1-42251		BOX,SWITCH	ﾎﾞｯｸｽ	1	[AW061/RWL][AW071/RWL] [RWL/BB SW][RWL/BBASW]
-	516G1-42251		BOX,SWITCH	ﾎﾞｯｸｽ	1	[AW061/BB SW][AW061/BBASW]
-	516G1-42251		BOX,SWITCH	ﾎﾞｯｸｽ	1	[AW071/BB SW][AW071/BBASW]
-	516G1-42251		BOX,SWITCH	ﾎﾞｯｸｽ	1	[AW061/RWL/BB SW] [AW061/RWL/BBASW]
-	516G1-42251		BOX,SWITCH	ﾎﾞｯｸｽ	1	[AW071/RWL/BB SW] [AW071/RWL/BBASW]
2	229F6-42201		SEAL,PANEL-COVER,A	ｼｰﾙ	2	[AW061][AW071][BB SW][BBASW]
-	229F6-42201		SEAL,PANEL-COVER,A	ｼｰﾙ	1	[RWL]
-	229F6-42201		SEAL,PANEL-COVER,A	ｼｰﾙ	1	[AW061/RWL][AW071/RWL] [RWL/BB SW][RWL/BBASW]
-	229F6-42201		SEAL,PANEL-COVER,A	ｼｰﾙ	2	[AW061/BB SW][AW061/BBASW]
-	229F6-42201		SEAL,PANEL-COVER,A	ｼｰﾙ	2	[AW071/BB SW][AW071/BBASW]
-	229F6-42201		SEAL,PANEL-COVER,A	ｼｰﾙ	1	[AW061/RWL/BB SW] [AW061/RWL/BBASW]
-	229F6-42201		SEAL,PANEL-COVER,A	ｼｰﾙ	1	[AW071/RWL/BB SW] [AW071/RWL/BBASW]
3	229F6-42211		SEAL,PANEL-COVER,B	ｼｰﾙ	3	[AW061][AW071][RWL][BB SW] [BBASW]
-	229F6-42211		SEAL,PANEL-COVER,B	ｼｰﾙ	2	[AW061/RWL][AW071/RWL] [RWL/BB SW][RWL/BBASW]
-	229F6-42211		SEAL,PANEL-COVER,B	ｼｰﾙ	2	[AW061/BB SW][AW061/BBASW]
-	229F6-42211		SEAL,PANEL-COVER,B	ｼｰﾙ	2	[AW071/BB SW][AW071/BBASW]
-	229F6-42211		SEAL,PANEL-COVER,B	ｼｰﾙ	1	[AW061/RWL/BB SW] [AW061/RWL/BBASW]
-	229F6-42211		SEAL,PANEL-COVER,B	ｼｰﾙ	1	[AW071/RWL/BB SW] [AW071/RWL/BBASW]
4	214A6-42252		SCREW	ｽｸﾘｭ	2	[AW061][AW071][RWL][BB SW] [BBASW]
-	214A6-42252		SCREW	ｽｸﾘｭ	2	[AW061/RWL][AW071/RWL] [RWL/BB SW][RWL/BBASW]
-	214A6-42252		SCREW	ｽｸﾘｭ	2	[AW061/BB SW][AW061/BBASW]
-	214A6-42252		SCREW	ｽｸﾘｭ	2	[AW071/BB SW][AW071/BBASW]
-	214A6-42252		SCREW	ｽｸﾘｭ	2	[AW061/RWL/BB SW] [AW061/RWL/BBASW]
-	214A6-42252		SCREW	ｽｸﾘｭ	2	[AW071/RWL/BB SW] [AW071/RWL/BBASW]

FIG.158 TRAY [SM][AM][TPM]

(F60264C0) トレー

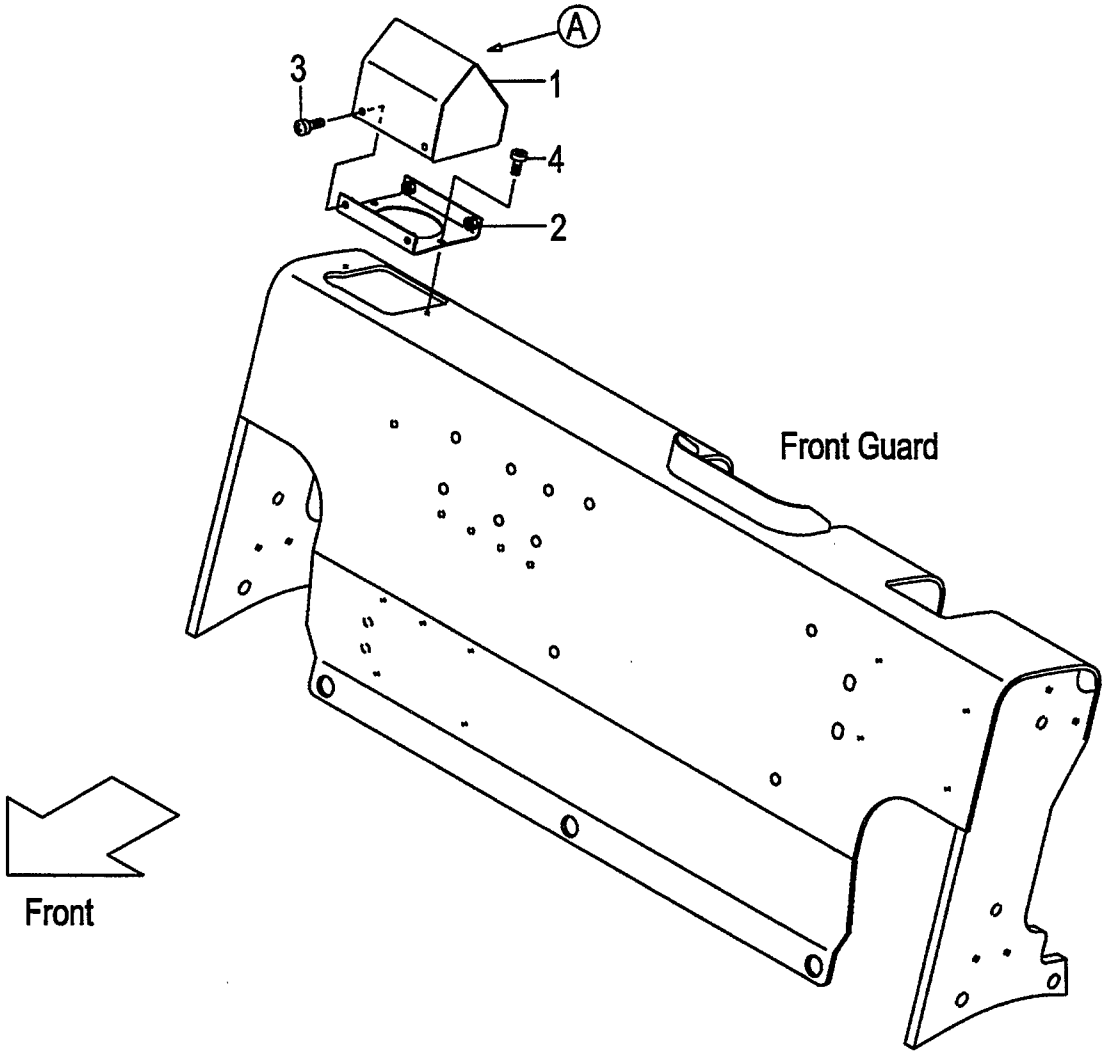

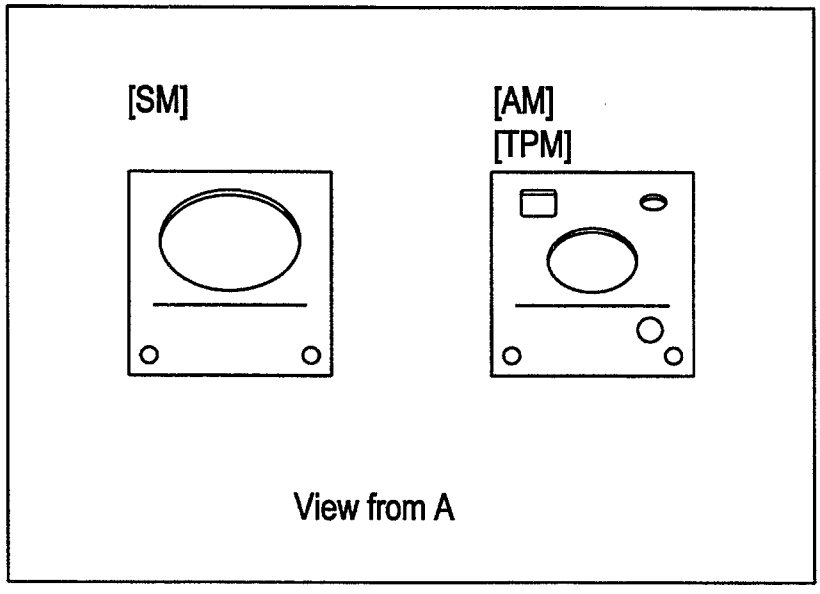

A:FD20C18 FD20T18 FD25C18 FD25T18
B:FD20C7 FD20T7 FD25C7 FD25T7 FD20W7 FD25W7

FIG.158
(F60264C0)

Item No	Part No.	Mark	Description		Req'd	Remarks : Serial No.
1	516G7-50401		BOX,METER	ﾎﾞｯｸｽ	1	[SM]
-	516G6-90401		BOX,METER	ﾎﾞｯｸｽ	1	[AM][TPM]
2	516G1-42021		BRACKET	ﾌﾞﾗｹｯﾄ	1	[SM][AM][TPM]
3	214A6-42771		SCREW	ｽｸﾘｭ	4	[SM][AM][TPM]
4	214A6-42252		SCREW	ｽｸﾘｭ	2	[SM][AM][TPM]

FIG.159 TRAY [SM/(BB SW,BBASW)][SM/(BB SW,BBASW)/RWL]

(F60264D0) トレー

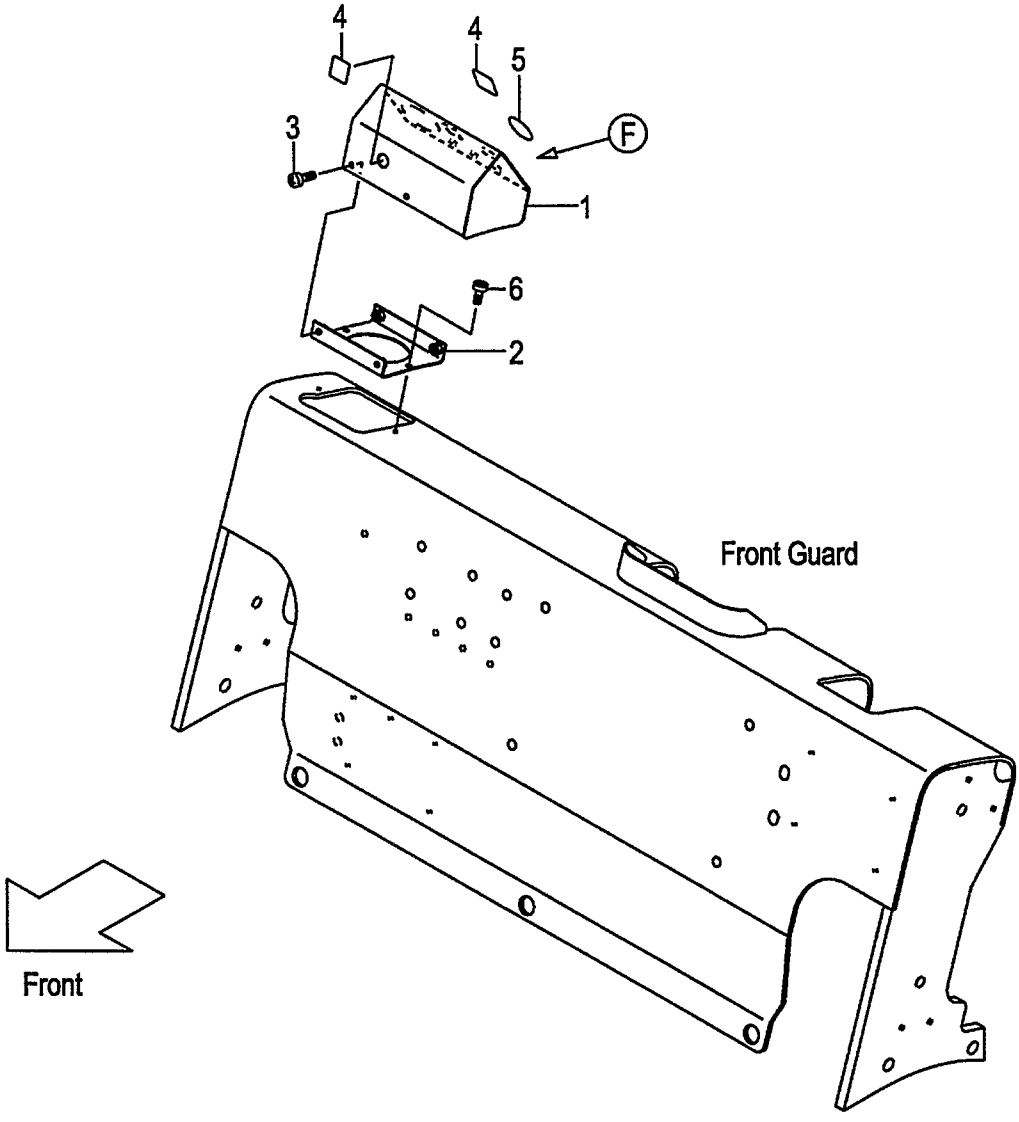

ITEM NO.		4		5		
HOLE		A	B	C	D	E
OPTION	[SM/BB SW・BBASW]	○	○		○	○
	[SM/BB SW・BBASW/RWL]	○			○	

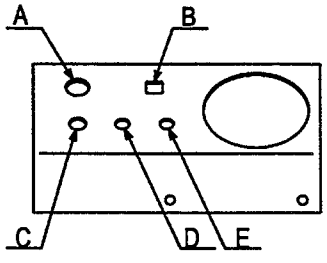

View from F

A:FD20C18 FD20T18 FD25C18 FD25T18
B:FD20C7 FD20T7 FD25C7 FD25T7 FD20W7 FD25W7

FIG.159
(F60264D0)

Item No	Part No.	Mark	Description		Req'd	Remarks : Serial No.
1	516G7-50201		BOX,METER & SWITCH	ﾎﾞｯｸｽ	1	[SM/BB SW][SM/BBASW] [SM/BB SW/RWL][SM/BBASW/RWL]
2	516G1-42021		BRACKET	ﾌﾞﾗｹｯﾄ	1	[SM/BB SW][SM/BBASW] [SM/BB SW/RWL][SM/BBASW/RWL]
3	214A6-42771		SCREW	ｽｸﾘｭ	4	[SM/BB SW][SM/BBASW] [SM/BB SW/RWL][SM/BBASW/RWL]
4	229F6-42201		SEAL,PANEL-COVER,A	ｼｰﾙ	3	[SM/BB SW][SM/BBASW]
-	229F6-42201		SEAL,PANEL-COVER,A	ｼｰﾙ	2	[SM/BB SW/RWL][SM/BBASW/RWL]
5	229F6-42211		SEAL,PANEL-COVER,B	ｼｰﾙ	2	[SM/BB SW][SM/BBASW]
-	229F6-42211		SEAL,PANEL-COVER,B	ｼｰﾙ	1	[SM/BB SW/RWL][SM/BBASW/RWL]
6	214A6-42361		SCREW	ｽｸﾘｭ	2	[SM/BB SW][SM/BBASW] [SM/BB SW/RWL][SM/BBASW/RWL]

FIG.160 TRAY [SM/(AW061,AW071)/RWL]

(F60264E0) トレー

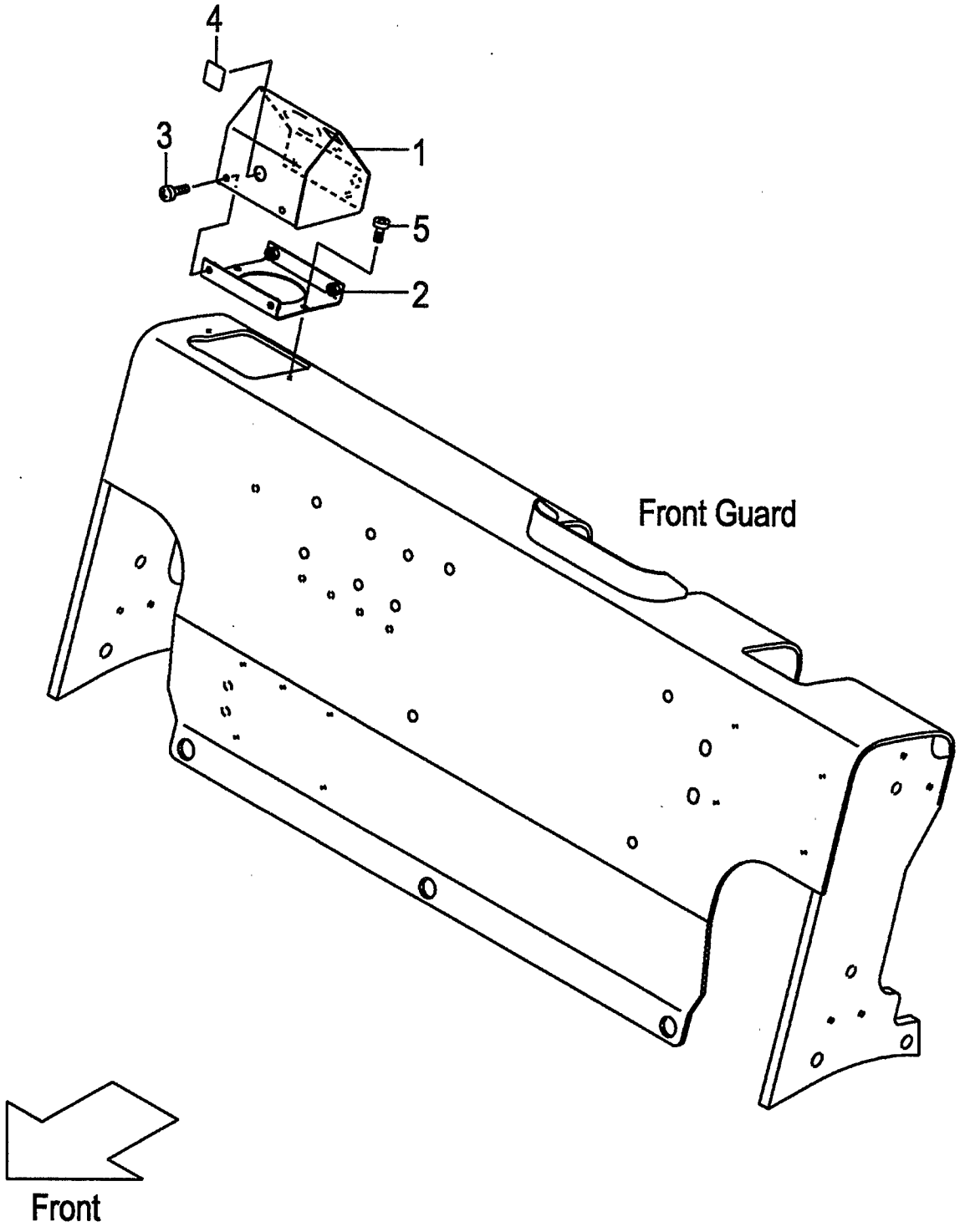

A:FD20C18 FD20T18 FD25C18 FD25T18
B:FD20C7 FD20T7 FD25C7 FD25T7 FD20W7 FD25W7

Item No	Part No.	Mark	Description		Req'd	Remarks : Serial No.
1	516G7-50211		BOX,METER & SWITCH	ﾎﾞｯｸｽ	1	[SM/AW061/RWL][SM/AW071/RWL]
2	516G1-42021		BRACKET	ﾌﾞﾗｹｯﾄ	1	[SM/AW061/RWL][SM/AW071/RWL]
3	214A6-42771		SCREW	ｽｸﾘｭ	4	[SM/AW061/RWL][SM/AW071/RWL]
4	229F6-42201		SEAL,PANEL-COVER,A	ｼｰﾙ	1	[SM/AW061/RWL][SM/AW071/RWL]
5	214A6-42361		SCREW	ｽｸﾘｭ	2	[SM/AW061/RWL][SM/AW071/RWL]

FIG.161 FRONT GUARD BOOT [FC]

(F60264F0) ﾌﾛﾝﾄｶﾞｰﾄﾞﾌﾞｰﾂ

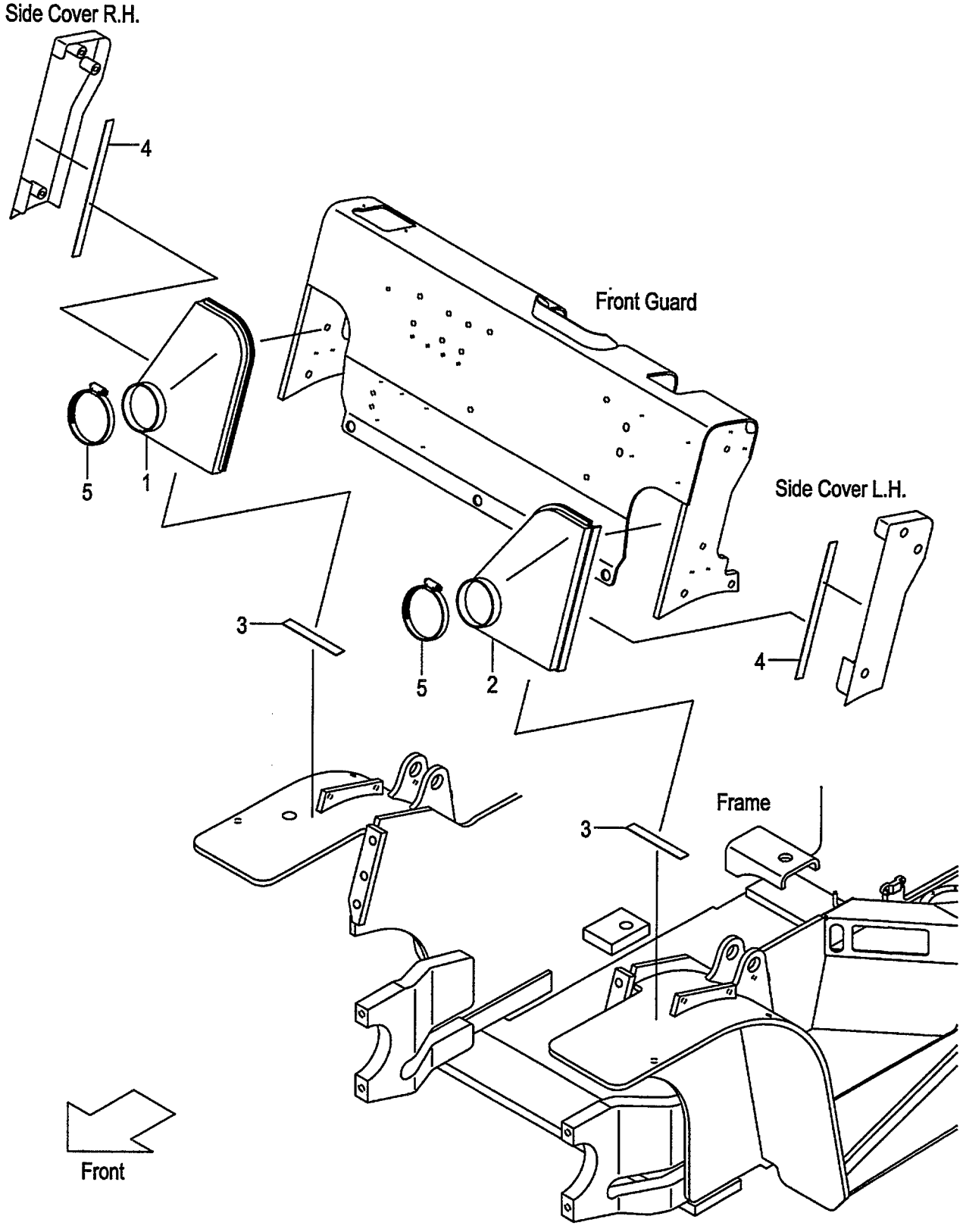

FIG.161
(F60264F0)

A:FD20C18 FD20T18 FD25C18 FD25T18
B:FD20C7 FD20T7 FD25C7 FD25T7 FD20W7 FD25W7

Item No	Part No.	Mark	Description		Req'd	Remarks : Serial No.
1	539A5-30251		BOOT,RH	ﾌﾞｰﾂ	1	[FC]
2	539A5-30261		BOOT,LH	ﾌﾞｰﾂ	1	[FC]
3	577H3-72181		TAPE	ﾃｰﾌﾟ	2	[FC]
4	539A5-32301		TAPE	ﾃｰﾌﾟ	2	[FC]
5	539A5-32091		CLAMP,HOSE	ｸﾗﾝﾌﾟ	2	[FC]

FIG.162 SEAT

(F6026810) シート

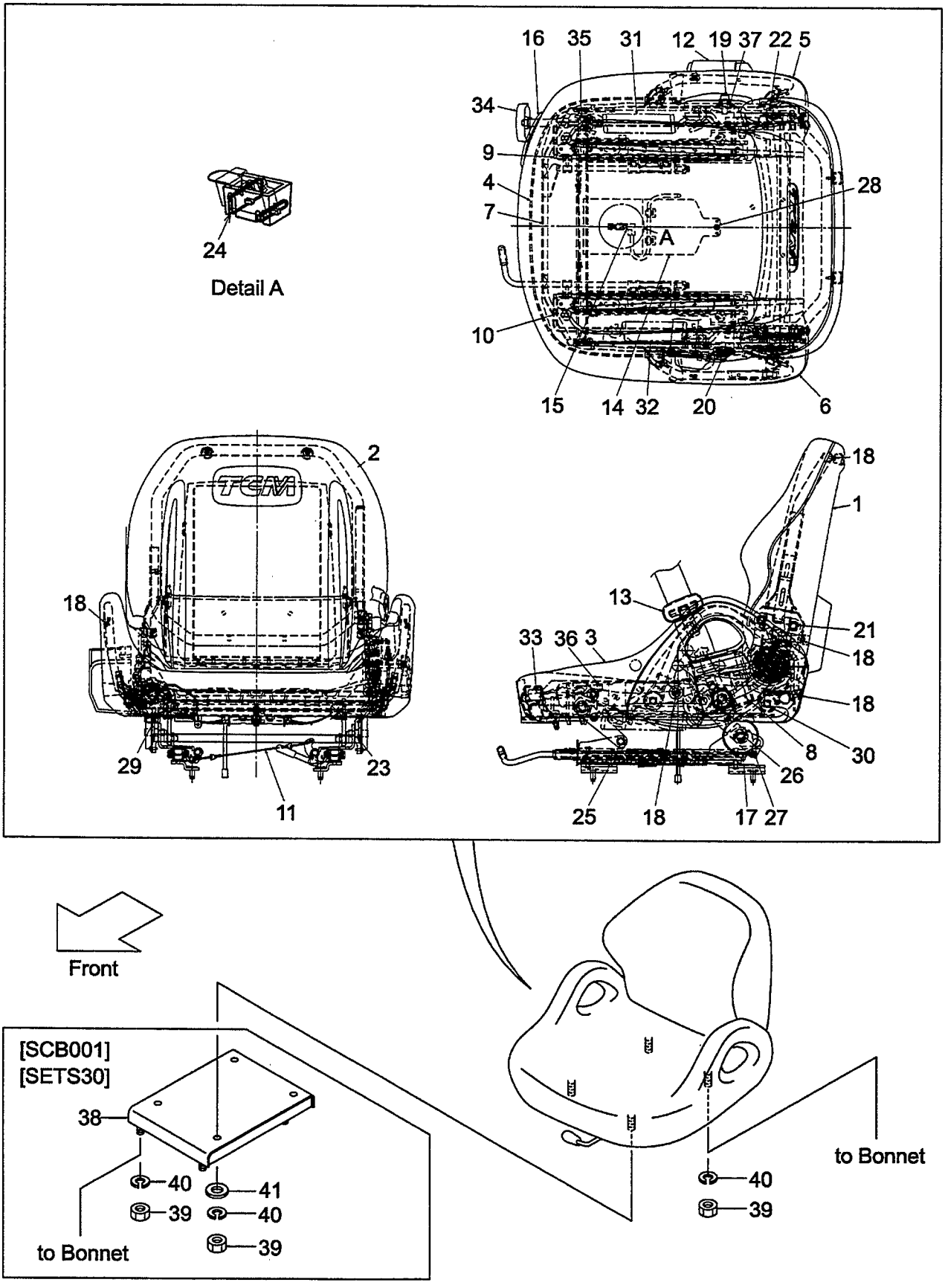

A:FD20C7 FD20T7 FD25C7 FD25T7 FD20W7 FD25W7

Item No	Part No.	Mark	Description		Req'd	Remarks : Serial No.
A1	242F6-80101		SEAT-ASSY	ｼｰﾄｱｯｾﾝ	1	INC.1-13,16-23,25-37
-	542F3-80101		SEAT-ASSY	ｼｰﾄｱｯｾﾝ	1	(SEAT SW) INC.1-37
1	242F6-82001		BOARD,SEAT-BACK	ﾎﾞｰﾄﾞ	1	
2	242F6-82011		PAD,SEAT-BACK	ﾊﾟｯﾄﾞ	1	
3	242F6-82021		PAD,SEAT-CUSHION	ﾊﾟｯﾄﾞ	1	
4	242F6-82031		PANEL,SEAT-CUSHION	ﾊﾟﾈﾙ	1	
5	242F6-82041		SHIELD,RH	ｼｰﾙﾄﾞ	1	
6	242F6-82051		SHIELD,LH	ｼｰﾙﾄﾞ	1	
7	242F6-82061		FRAME	ﾌﾚｰﾑ	1	
8	242F6-82071		LEVER	ﾚﾊﾞｰ	1	
9	242F6-82081		TRACK,RH	ﾄﾗｯｸ	1	
10	242F6-82091		TRACK,LH	ﾄﾗｯｸ	1	
11	242F6-82101		WIRE	ﾜｲﾔ	1	
12	242F6-82111		BELT,SEAT,OUTER	ﾍﾞﾙﾄ	1	
13	242F6-82121		BELT,SEAT,INNER	ﾍﾞﾙﾄ	1	
14	542F3-82001		PLATE,SEAT-CUSHION	ﾌﾟﾚｰﾄ	1	(SEAT SW)
15	542F3-82011		SWITCH,SEAT	ｽｲｯﾁ	1	(SEAT SW)
16	242F6-82131		CONTROL,SUSPENSION	ｺﾝﾄﾛｰﾙ	1	
17	242F6-82141		ABSORBER,SUSPENSION	ｱﾌﾞｿｰﾊﾞ	2	
18	242F6-82151		SCREW	ｽｸﾘｭ	10	
19	242F6-82161		BOLT	ﾎﾞﾙﾄ	1	
20	242F6-82171		BOLT	ﾎﾞﾙﾄ	1	
21	242F6-82181		BOLT	ﾎﾞﾙﾄ	2	
22	242F6-82191		BOLT	ﾎﾞﾙﾄ	1	
23	242F6-82201		COLLAR	ｶﾗｰ	4	
24	542F3-82021		CLAMP	ｸﾗﾝﾌﾟ	2	(SEAT SW)
25	242F6-82211		BOLT	ﾎﾞﾙﾄ	2	
26	242F6-82221		BOLT	ﾎﾞﾙﾄ	2	
27	242F6-82231		SCREW	ｽｸﾘｭ	4	
28	242F6-82241		SCREW	ｽｸﾘｭ	1	(SEAT SW)
29	242F6-82251		SCREW	ｽｸﾘｭ	2	
30	242F6-82261		BOLT	ﾎﾞﾙﾄ	4	
31	242F6-82271		SPRING,TENSION	ｽﾌﾟﾘﾝｸﾞ	1	
32	242F6-82281		SPRING,TENSION	ｽﾌﾟﾘﾝｸﾞ	1	
33	242F6-82291		SHAFT,SUS-CONTROL	ｼｬﾌﾄ	1	
34	242F6-82301		HANDLE,SUS-CONTROL	ﾊﾝﾄﾞﾙ	1	
35	242F6-82311		PIN	ﾋﾟﾝ	1	
36	242F6-82321		NUT	ﾅｯﾄ	1	
37	242F6-82331		WASHER	ﾜｯｼｬ	1	
38	534A5-32311		SPACER,SEAT	ｽﾍﾟｰｻ	1	[SCB001][SETS30]
39	01400-00008		NUT	ﾅｯﾄ	4	
-	01400-00008		NUT	ﾅｯﾄ	8	[SCB001][SETS30]
40	02010-00008		WASHER	ﾜｯｼｬ	4	
-	02010-00008		WASHER	ﾜｯｼｬ	8	[SCB001][SETS30]
41	02000-00008		WASHER	ﾜｯｼｬ	4	[SCB001][SETS30]

FIG.163 SEAT
(F6026820) シート

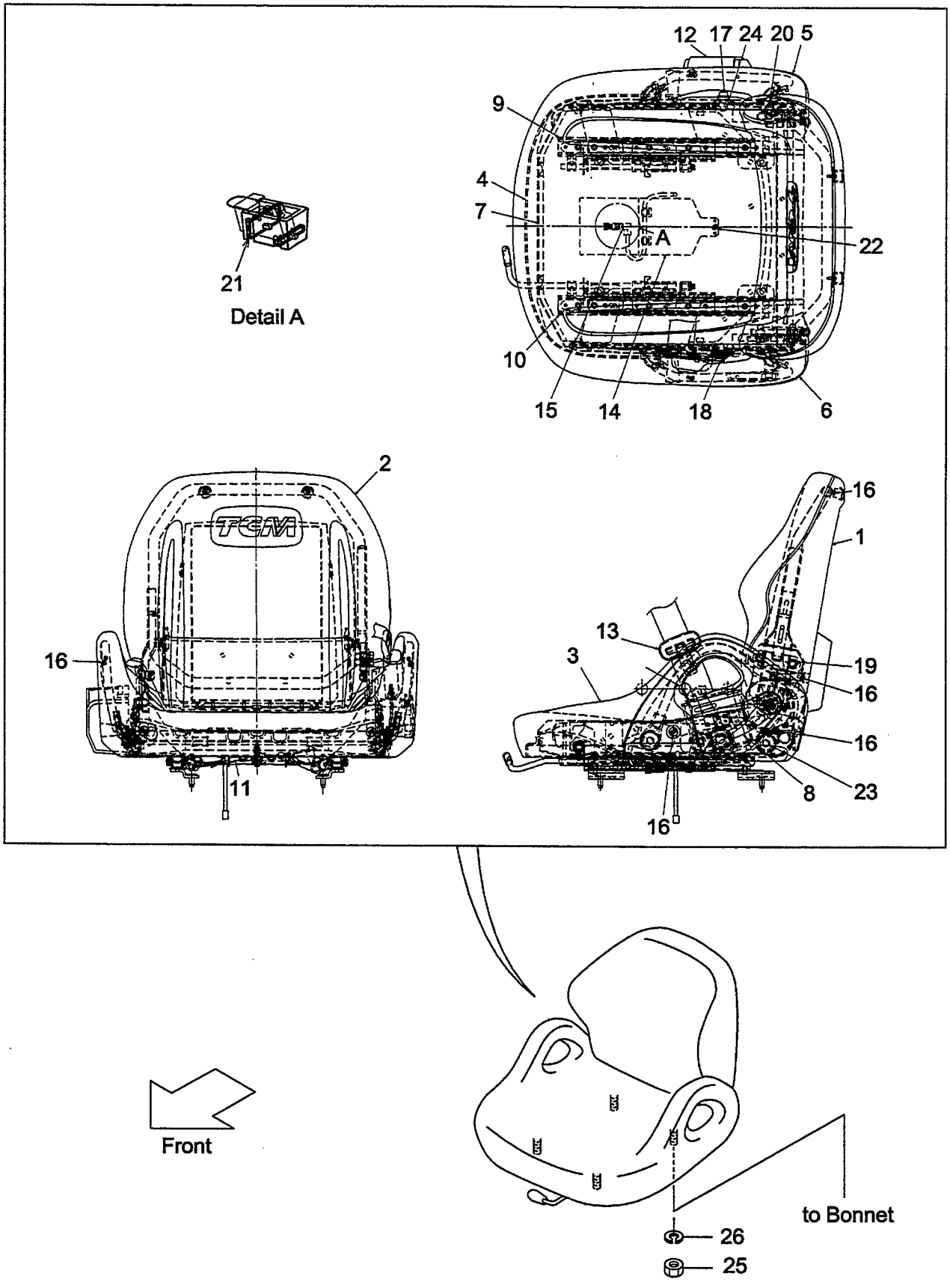

A:FD20C18 FD20T18 FD25C18 FD25T18

Item No	Part No.	Mark	Description		Req'd	Remarks : Serial No.
A1	242F6-80201		SEAT-ASSY	ｼｰﾄｱｯｾﾝ	1	INC.1-13,16-20,23,24
-	542F3-80201		SEAT-ASSY	ｼｰﾄｱｯｾﾝ	1	(SEAT SW) INC.1-24
1	242F6-82001		BOARD,SEAT-BACK	ﾎﾞｰﾄﾞ	1	
2	242F6-82011		PAD,SEAT-BACK	ﾊﾟｯﾄﾞ	1	
3	242F6-82021		PAD,SEAT-CUSHION	ﾊﾟｯﾄﾞ	1	
4	242F6-82031		PANEL,SEAT-CUSHION	ﾊﾟﾈﾙ	1	
5	242F6-82041		SHIELD,RH	ｼｰﾙﾄﾞ	1	
6	242F6-82051		SHIELD,LH	ｼｰﾙﾄﾞ	1	
7	242F6-82061		FRAME	ﾌﾚｰﾑ	1	
8	242F6-82071		LEVER	ﾚﾊﾞｰ	1	
9	242F6-82081		TRACK,RH	ﾄﾗｯｸ	1	
10	242F6-82091		TRACK,LH	ﾄﾗｯｸ	1	
11	242F6-82101		WIRE	ﾜｲﾔ	1	
12	242F6-82111		BELT,SEAT,OUTER	ﾍﾞﾙﾄ	1	
13	242F6-82121		BELT,SEAT,INNER	ﾍﾞﾙﾄ	1	
14	542F3-82001		PLATE,SEAT-CUSHION	ﾌﾟﾚｰﾄ	1	(SEAT SW)
15	542F3-82011		SWITCH,SEAT	ｽｲｯﾁ	1	(SEAT SW)
16	242F6-82151		SCREW	ｽｸﾘｭ	10	
17	242F6-82161		BOLT	ﾎﾞﾙﾄ	1	
18	242F6-82171		BOLT	ﾎﾞﾙﾄ	1	
19	242F6-82181		BOLT	ﾎﾞﾙﾄ	2	
20	242F6-82191		BOLT	ﾎﾞﾙﾄ	1	
21	542F3-82021		CLAMP	ｸﾗﾝﾌﾟ	2	(SEAT SW)
22	242F6-82241		SCREW	ｽｸﾘｭ	1	(SEAT SW)
23	242F6-82261		BOLT	ﾎﾞﾙﾄ	4	
24	242F6-82291		SHAFT,SUS-CONTROL	ｼｬﾌﾄ	1	
25	01400-00008		NUT	ﾅｯﾄ	4	
26	02010-00008		WASHER	ﾜｯｼｬ	4	

FIG.164 SEAT [HGL]

(F6026830) シート

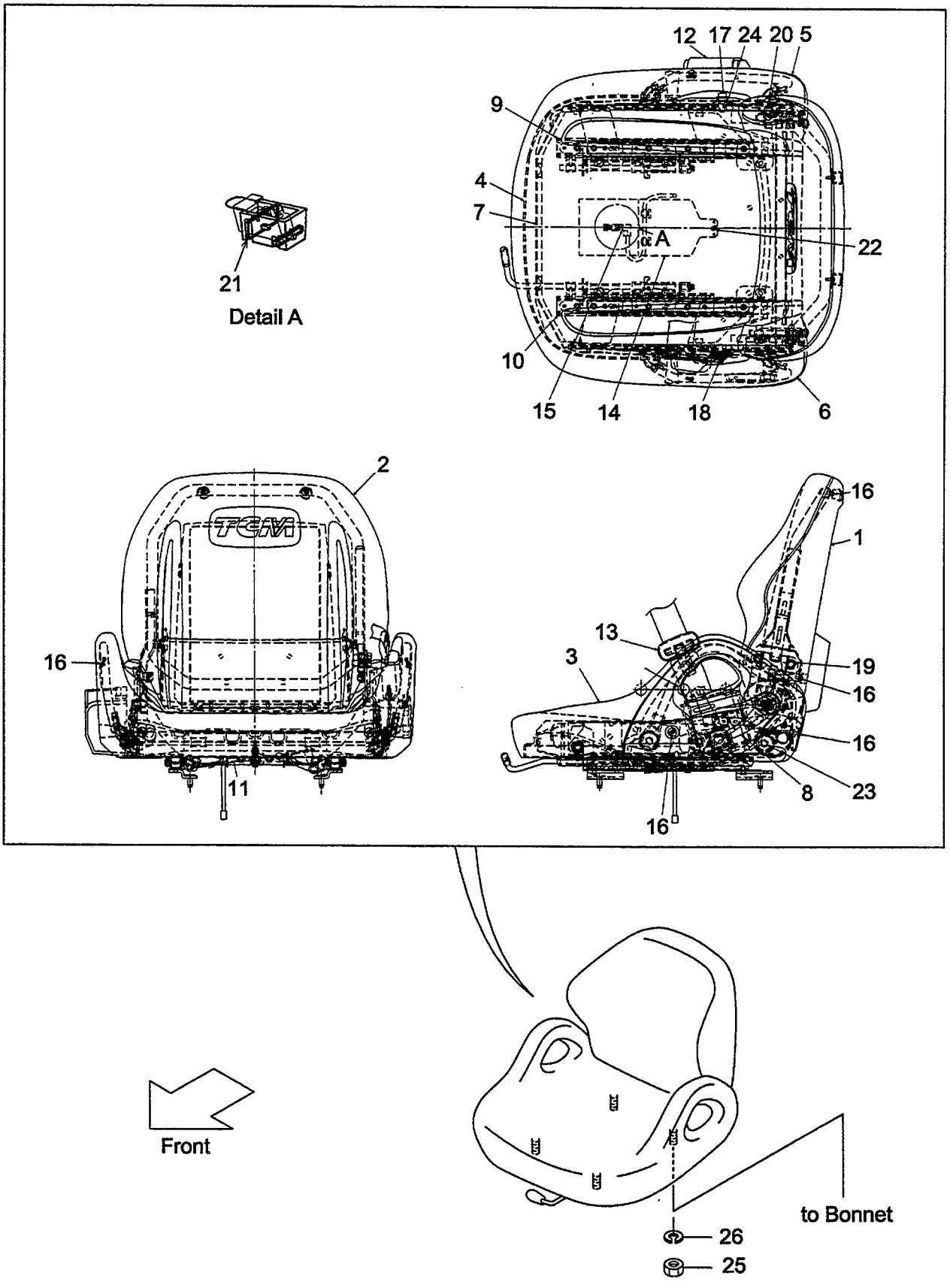

A:FD20C7 FD20T7 FD25C7 FD25T7 FD20W7 FD25W7

Item No	Part No.	Mark	Description		Req'd	Remarks : Serial No.
A1	242F6-80201		SEAT-ASSY	ｼｰﾄｱｯｾﾝ	1	[HGL] INC.1-13,16-20,23,24
-	542F3-80201		SEAT-ASSY	ｼｰﾄｱｯｾﾝ	1	[HGL](SEAT SW) INC.1-24
1	242F6-82001		BOARD,SEAT-BACK	ﾎﾞｰﾄﾞ	1	[HGL]
2	242F6-82011		PAD,SEAT-BACK	ﾊﾟｯﾄﾞ	1	[HGL]
3	242F6-82021		PAD,SEAT-CUSHION	ﾊﾟｯﾄﾞ	1	[HGL]
4	242F6-82031		PANEL,SEAT-CUSHION	ﾊﾟﾈﾙ	1	[HGL]
5	242F6-82041		SHIELD,RH	ｼｰﾙﾄﾞ	1	[HGL]
6	242F6-82051		SHIELD,LH	ｼｰﾙﾄﾞ	1	[HGL]
7	242F6-82061		FRAME	ﾌﾚｰﾑ	1	[HGL]
8	242F6-82071		LEVER	ﾚﾊﾞｰ	1	[HGL]
9	242F6-82081		TRACK,RH	ﾄﾗｯｸ	1	[HGL]
10	242F6-82091		TRACK,LH	ﾄﾗｯｸ	1	[HGL]
11	242F6-82101		WIRE	ﾜｲﾔ	1	[HGL]
12	242F6-82111		BELT,SEAT,OUTER	ﾍﾞﾙﾄ	1	[HGL]
13	242F6-82121		BELT,SEAT,INNER	ﾍﾞﾙﾄ	1	[HGL]
14	542F3-82001		PLATE,SEAT-CUSHION	ﾌﾟﾚｰﾄ	1	[HGL](SEAT SW)
15	542F3-82011		SWITCH,SEAT	ｽｲｯﾁ	1	[HGL](SEAT SW)
16	242F6-82151		SCREW	ｽｸﾘｭ	10	[HGL]
17	242F6-82161		BOLT	ﾎﾞﾙﾄ	1	[HGL]
18	242F6-82171		BOLT	ﾎﾞﾙﾄ	1	[HGL]
19	242F6-82181		BOLT	ﾎﾞﾙﾄ	2	[HGL]
20	242F6-82191		BOLT	ﾎﾞﾙﾄ	1	[HGL]
21	542F3-82021		CLAMP	ｸﾗﾝﾌﾟ	2	[HGL](SEAT SW)
22	242F6-82241		SCREW	ｽｸﾘｭ	1	[HGL](SEAT SW)
23	242F6-82261		BOLT	ﾎﾞﾙﾄ	4	[HGL]
24	242F6-82291		SHAFT,SUS-CONTROL	ｼｬﾌﾄ	1	[HGL]
25	01400-00008		NUT	ﾅｯﾄ	4	[HGL]
26	02010-00008		WASHER	ﾜｯｼｬ	4	[HGL]

FIG.165 SEAT [RW]

(F6026840) シート

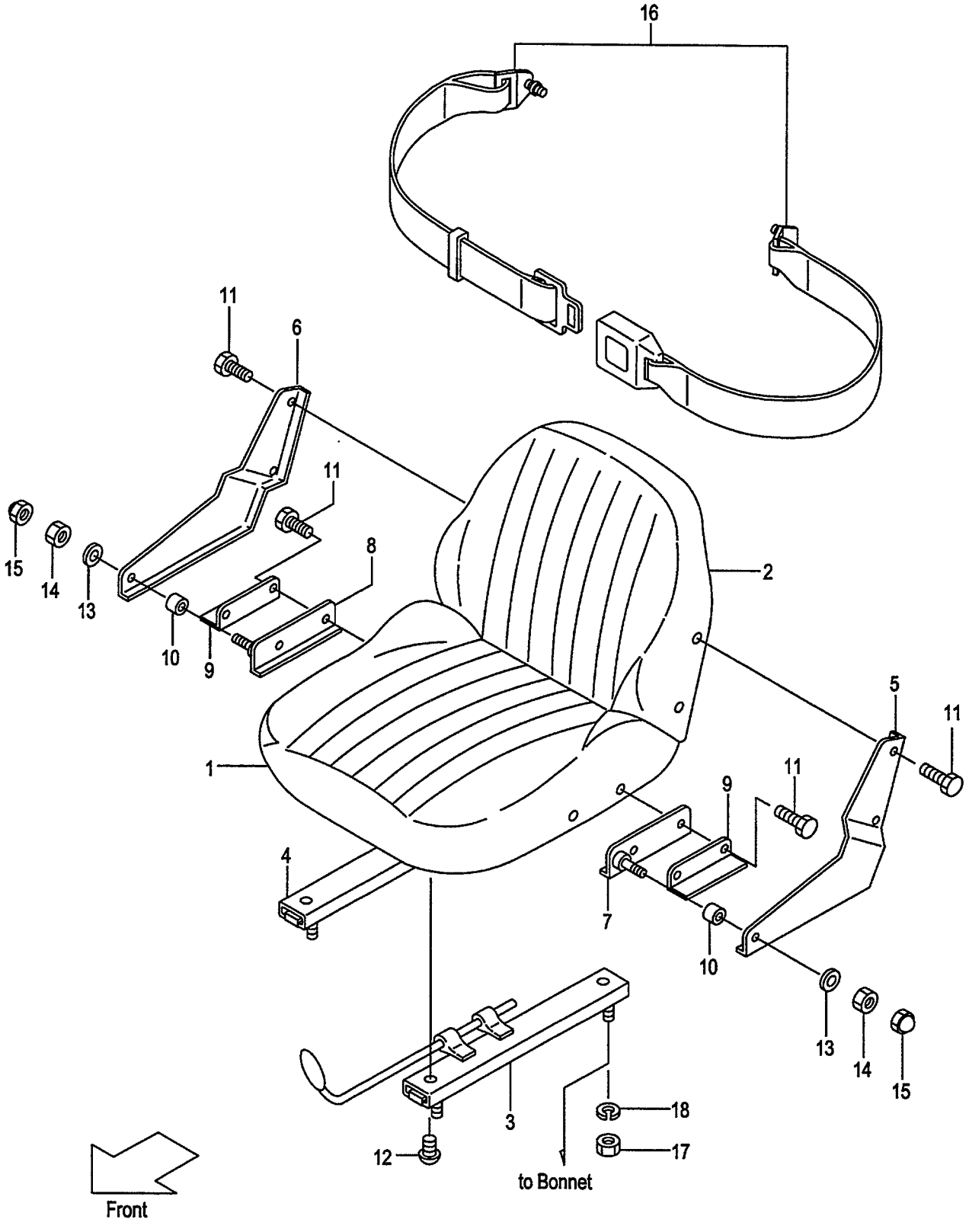

A:FD25C7 FD25T7 FD25W7

Item No	Part No.	Mark	Description		Req'd	Remarks : Serial No.
A1	24846-80302		SEAT-ASSY	ｼｰﾄｱｯｾﾝ	1	[RW] INC.1-15
1	23656-83001		CUSHION,SEAT	ｸｯｼｮﾝ	1	[RW]
2	23656-83011		BACK,SEAT	ﾊﾞｯｸ	1	[RW]
3	NO PART NO.	#	ADJUSTER,SEAT	ｱｼﾞｬｽﾀ	1	[RW]
4	NO PART NO.	#	ADJUSTER,SEAT	ｱｼﾞｬｽﾀ	1	[RW]
5	24846-82001		PLATE,SIDE,LH	ﾌﾟﾚｰﾄ	1	[RW]
6	24846-82011		PLATE,SIDE,RH	ﾌﾟﾚｰﾄ	1	[RW]
7	24846-82021		BRACKET,HINGE,LH	ﾌﾞﾗｹｯﾄ	1	[RW]
8	24846-82031		BRACKET,HINGE,RH	ﾌﾞﾗｹｯﾄ	1	[RW]
9	24846-82041		BRACKET	ﾌﾞﾗｹｯﾄ	2	[RW]
10	23655-22101		BUSHING	ﾌﾞｯｼﾝｸﾞ	2	[RW]
11	23656-83051		BOLT	ﾎﾞﾙﾄ	8	[RW]
12	23656-83061		SCREW	ｽｸﾘｭ	4	[RW]
13	02000-00010		WASHER	ﾜｯｼｬ	2	[RW]
14	01402-00010		NUT	ﾅｯﾄ	2	[RW]
15	24846-82051		NUT,CAP	ﾅｯﾄ	2	[RW]
16	514T6-42001		BELT,SEAT	ﾍﾞﾙﾄ	1	[RW]
17	01400-00008		NUT	ﾅｯﾄ	4	[RW]
18	02010-00008		WASHER	ﾜｯｼｬ	4	[RW]

FIG.166 SEAT [SETDX1]

(F6026850) シート

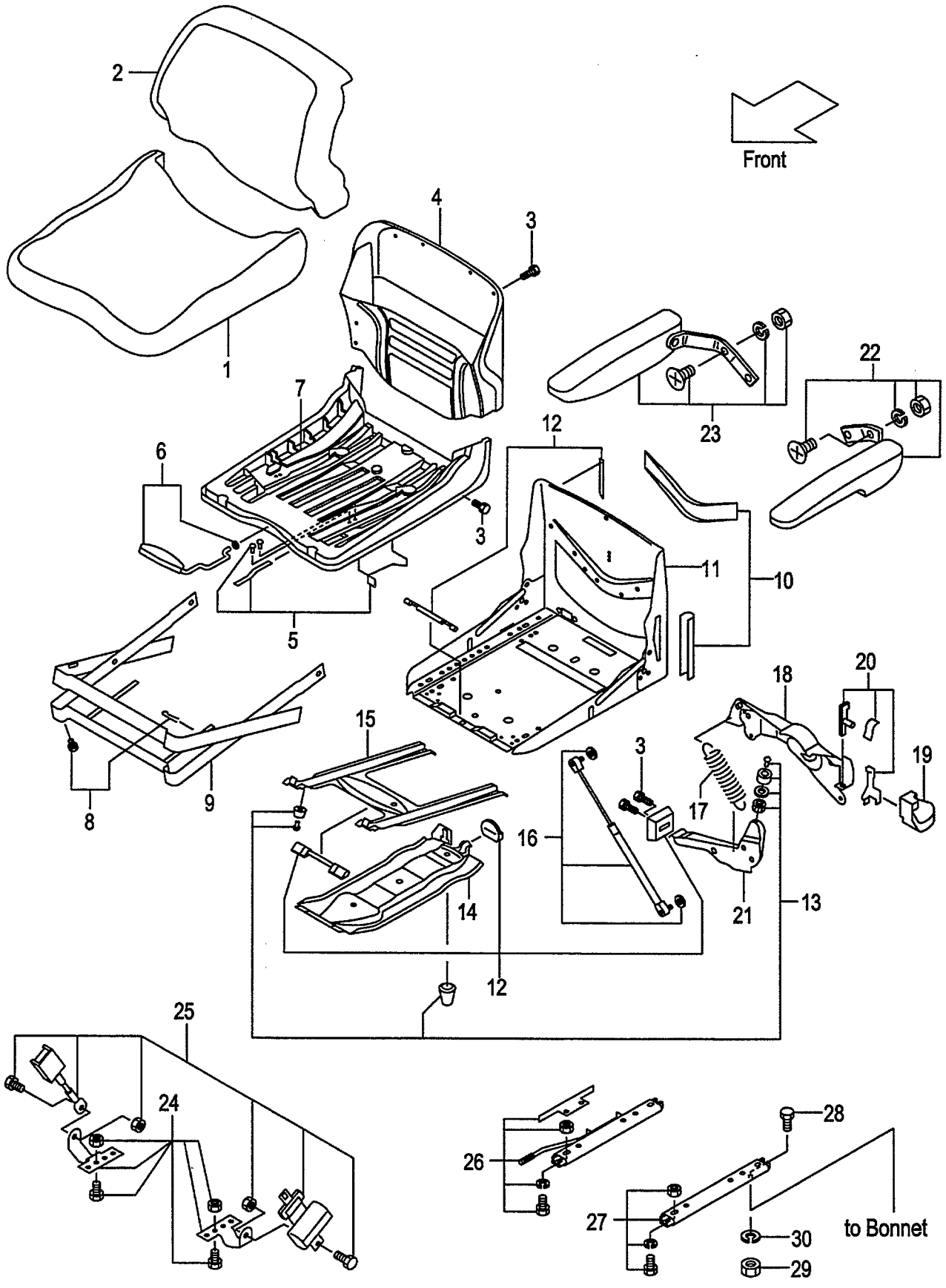

FIG.166
(F6026850)

A:FD20C18 FD20T18 FD25C18 FD25T18
B:FD20C7 FD20T7 FD25C7 FD25T7 FD20W7 FD25W7

Item No	Part No.	Mark	Description		Req'd	Remarks : Serial No.
A1	534A6-42001		SEAT-ASSY	ｼｰﾄｱｯｾﾝ	1	[SETDX1] INC.1-25
1	534A6-42201		CUSHION,SEAT	ｸｯｼｮﾝ	1	[SETDX1]
2	534A6-42211		CUSHION,BACKREST	ｸｯｼｮﾝ	1	[SETDX1]
3	534A6-42221		FIXTURE	ﾌｨｸｽﾁｬ	3	[SETDX1]
4	534A6-42231		PLATE,BACKREST	ﾌﾟﾚｰﾄ	1	[SETDX1]
5	534A6-42241		SET,SPRING	ｽﾌﾟﾘﾝｸﾞｾｯﾄ	1	[SETDX1]
6	534A6-42251		LEVER,RECLINING	ﾚﾊﾞｰ	1	[SETDX1]
7	534A6-42261		PLATE,SEAT	ﾌﾟﾚｰﾄ	1	[SETDX1]
8	534A6-42271		FIXTURE,COVER	ﾌｨｸｽﾁｬ	1	[SETDX1]
9	534A6-42281		COVER	ｶﾊﾞｰ	1	[SETDX1]
10	534A6-42291		FIXTURE,SEAT-FRAME	ﾌｨｸｽﾁｬ	1	[SETDX1]
11	534A6-42301		FRAME,SEAT	ﾌﾚｰﾑ	1	[SETDX1]
12	534A6-42311		SET,CONSUMABLES	ｺﾝｼｭｰﾏﾌﾞﾙｾｯﾄ	1	[SETDX1]
13	534A6-42321		KIT,CUSHION	ｸｯｼｮﾝｷｯﾄ	1	[SETDX1]
14	534A6-42331		SPRING,INNER	ｽﾌﾟﾘﾝｸﾞ	1	[SETDX1]
15	534A6-42341		SPRING,OUTER	ｽﾌﾟﾘﾝｸﾞ	1	[SETDX1]
16	534A6-42351		ABSORBER,SHOCK	ｱﾌﾞｿｰﾊﾞ	1	[SETDX1]
17	534A6-42361		SPRING,TENSION	ｽﾌﾟﾘﾝｸﾞ	1	[SETDX1]
18	534A6-42371		COVER	ｶﾊﾞｰ	1	[SETDX1]
19	534A6-42381		HANDLE	ﾊﾝﾄﾞﾙ	1	[SETDX1]
20	534A6-42391		SET,HANDLE	ﾊﾝﾄﾞﾙｾｯﾄ	1	[SETDX1]
21	534A6-42401		SET,LEVER	ﾚﾊﾞｰｾｯﾄ	1	[SETDX1]
22	534A6-42411		REST,ARM,LH	ﾚｽﾄ	1	[SETDX1]
23	534A6-42421		REST,ARM,RH	ﾚｽﾄ	1	[SETDX1]
A2	534A6-42451		BELT-ASSY,SEAT	ﾍﾞﾙﾄｱｯｾﾝ	1	[SETDX1] INC.24,25
24	534A6-42431		SET,BELT-BRACKET	ﾍﾞﾙﾄﾌﾞﾗｹｯﾄｾｯﾄ	1	[SETDX1]
25	534A6-42441		SET,SEAT-BELT	ｼｰﾄﾍﾞﾙﾄｾｯﾄ	1	[SETDX1]
26	534A6-42472		RAIL	ﾚｰﾙ	1	[SETDX1]
27	534A6-42482		RAIL,LOCK	ﾚｰﾙ	1	[SETDX1]
28	01100-08020		BOLT	ﾎﾞﾙﾄ	4	[SETDX1]
29	01400-00008		NUT	ﾅｯﾄ	4	[SETDX1]
30	02010-00008		WASHER	ﾜｯｼｬ	4	[SETDX1]

FIG.167 PUMP UNIT (CLUTCH)(TOR-CON)

(F6027120) ﾎﾟﾝﾌﾟﾕﾆｯﾄ

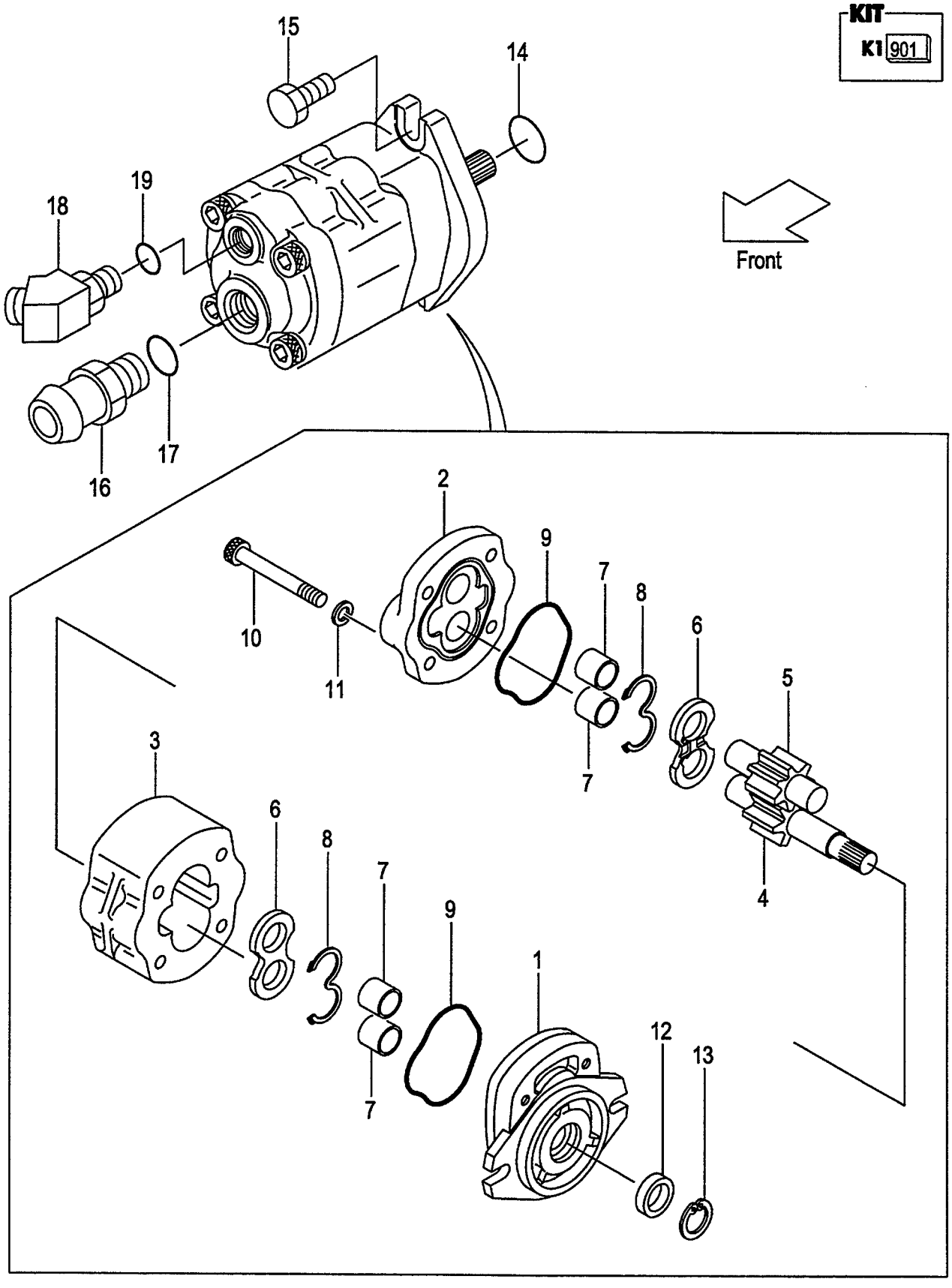

A:FD20C7 FD20T7 FD25C7 FD25T7

Item No	Part No.	Mark	Description		Req'd	Remarks : Serial No.
A1	110F7-10271		PUMP-ASSY,GEAR	ｷﾞﾔｰﾎﾟﾝﾌﾟｱｯｾﾝ	1	INC.1-13
901	110F7-12001	K1	KIT,REPAIR	ﾘﾍﾟｱｷｯﾄ	1	INC.8,9,12,13
1	NO PART NO.	#	COVER,FRONT	ｶﾊﾞｰ	1	
2	NO PART NO.	#	COVER,REAR	ｶﾊﾞｰ	1	
3	NO PART NO.	#	BODY	ﾎﾞﾃﾞｨ	1	
4	NO PART NO.	#	GEAR,DRIVE	ｷﾞﾔｰ	1	
5	NO PART NO.	#	GEAR,DRIVEN	ｷﾞﾔｰ	1	
6	NO PART NO.	#	PLATE,SIDE	ﾌﾟﾚｰﾄ	2	
7	NO PART NO.	#	BUSHING	ﾌﾞｯｼﾝｸﾞ	4	
8	NO PART NO.	#*	GASKET	ｶﾞｽｹｯﾄ	2	
9	NO PART NO.	#*	GASKET	ｶﾞｽｹｯﾄ	2	
10	R-400-50647-03		BOLT	ﾎﾞﾙﾄ	4	
11	R-402-00012-12		WASHER	ﾜｯｼｬ	4	
12	NO PART NO.	#*	SEAL,OIL	ｼｰﾙ	1	
13	NO PART NO.	#*	RING,SNAP	ｽﾅｯﾌﾟﾘﾝｸﾞ	1	
14	03340-00140		O-RING	Oﾘﾝｸﾞ	1	
15	01185-10055		BOLT	ﾎﾞﾙﾄ	2	
A2	225A7-62021		NIPPLE-ASSY	ﾆｯﾌﾟﾙｱｯｾﾝ	1	INC.16,17
16	NO PART NO.	#	NIPPLE	ﾆｯﾌﾟﾙ	1	
17	03320-00290		O-RING	Oﾘﾝｸﾞ	1	
A3	271A7-60351		ADAPTER-ASSY	ｱﾀﾞﾌﾟﾀｱｯｾﾝ	1	INC.18,19
18	NO PART NO.	#	ADAPTER	ｱﾀﾞﾌﾟﾀ	1	
19	03320-00180		O-RING	Oﾘﾝｸﾞ	1	

FIG.168 PUMP UNIT (CLUTCH)(TOR-CON)

(F6027130) ﾎﾟﾝﾌﾟﾕﾆｯﾄ

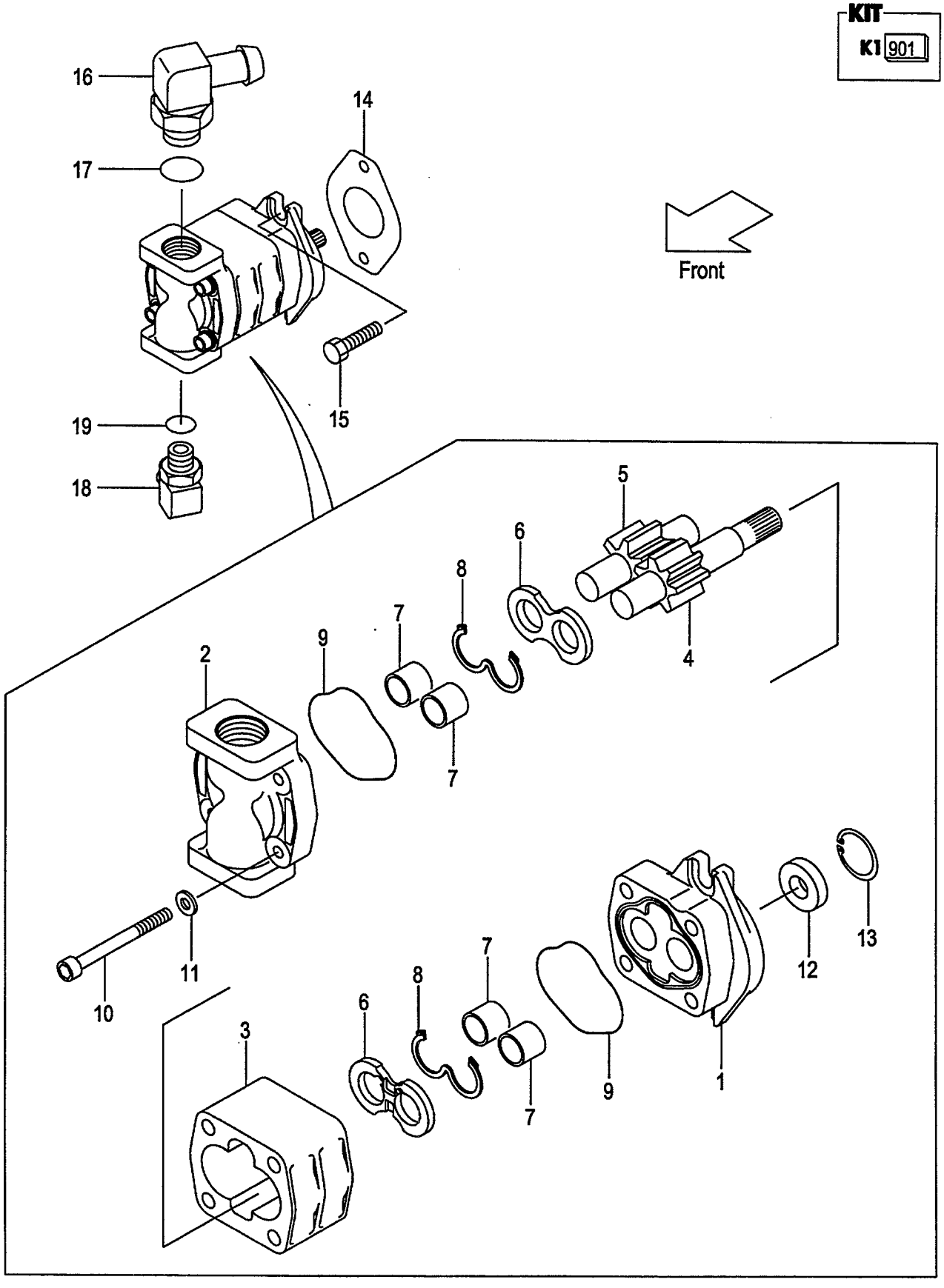

A:FD20C18 FD20T18 FD25C18 FD25T18

Item No	Part No.	Mark	Description		Req'd	Remarks : Serial No.
A1	241G7-10201		PUMP-ASSY,GEAR	ｷﾞﾔｰﾎﾟﾝﾌﾟｱｯｾﾝ	1	INC.1-13
901	R-403-21988	K1	KIT,REPAIR	ﾘﾍﾟｱｷｯﾄ	1	INC.8,9,12,13
1	NO PART NO.	#	COVER,FRONT	ｶﾊﾞｰ	1	
2	NO PART NO.	#	COVER,REAR	ｶﾊﾞｰ	1	
3	NO PART NO.	#	BODY	ﾎﾞﾃﾞｨ	1	
4	NO PART NO.	#	GEAR,DRIVE	ｷﾞﾔｰ	1	
5	NO PART NO.	#	GEAR,DRIVEN	ｷﾞﾔｰ	1	
6	NO PART NO.	#	PLATE,SIDE	ﾌﾟﾚｰﾄ	2	
7	NO PART NO.	#	BUSHING	ﾌﾞｯｼﾝｸﾞ	4	
8	NO PART NO.	#*	GASKET	ｶﾞｽｹｯﾄ	2	
9	NO PART NO.	#*	GASKET	ｶﾞｽｹｯﾄ	2	
10	NO PART NO.		BOLT	ﾎﾞﾙﾄ	4	
11	NO PART NO.		WASHER	ﾜｯｼｬ	4	
12	NO PART NO.	#*	SEAL,OIL	ｼｰﾙ	1	
13	NO PART NO.	#*	RING,SNAP	ｽﾅｯﾌﾟﾘﾝｸﾞ	1	
14	241G7-12001		PACKING	ﾊﾟｯｷﾝｸﾞ	1	
15	01186-10030		BOLT	ﾎﾞﾙﾄ	2	
A2	214L7-62261		ELBOW-ASSY	ｴﾙﾎﾞｱｯｾﾝ	1	INC.16,17
16	NO PART NO.	#	ELBOW	ｴﾙﾎﾞ	1	
17	03320-00290		O-RING	Oﾘﾝｸﾞ	1	
A3	229F0-91001		ELBOW-ASSY	ｴﾙﾎﾞｱｯｾﾝ	1	INC.18,19
18	NO PART NO.	#	ELBOW	ｴﾙﾎﾞ	1	
19	03320-00240		O-RING	Oﾘﾝｸﾞ	1	

FIG.169 PUMP UNIT (OIL CLUTCH)

(F6027150) ﾎﾟﾝﾌﾟﾕﾆｯﾄ

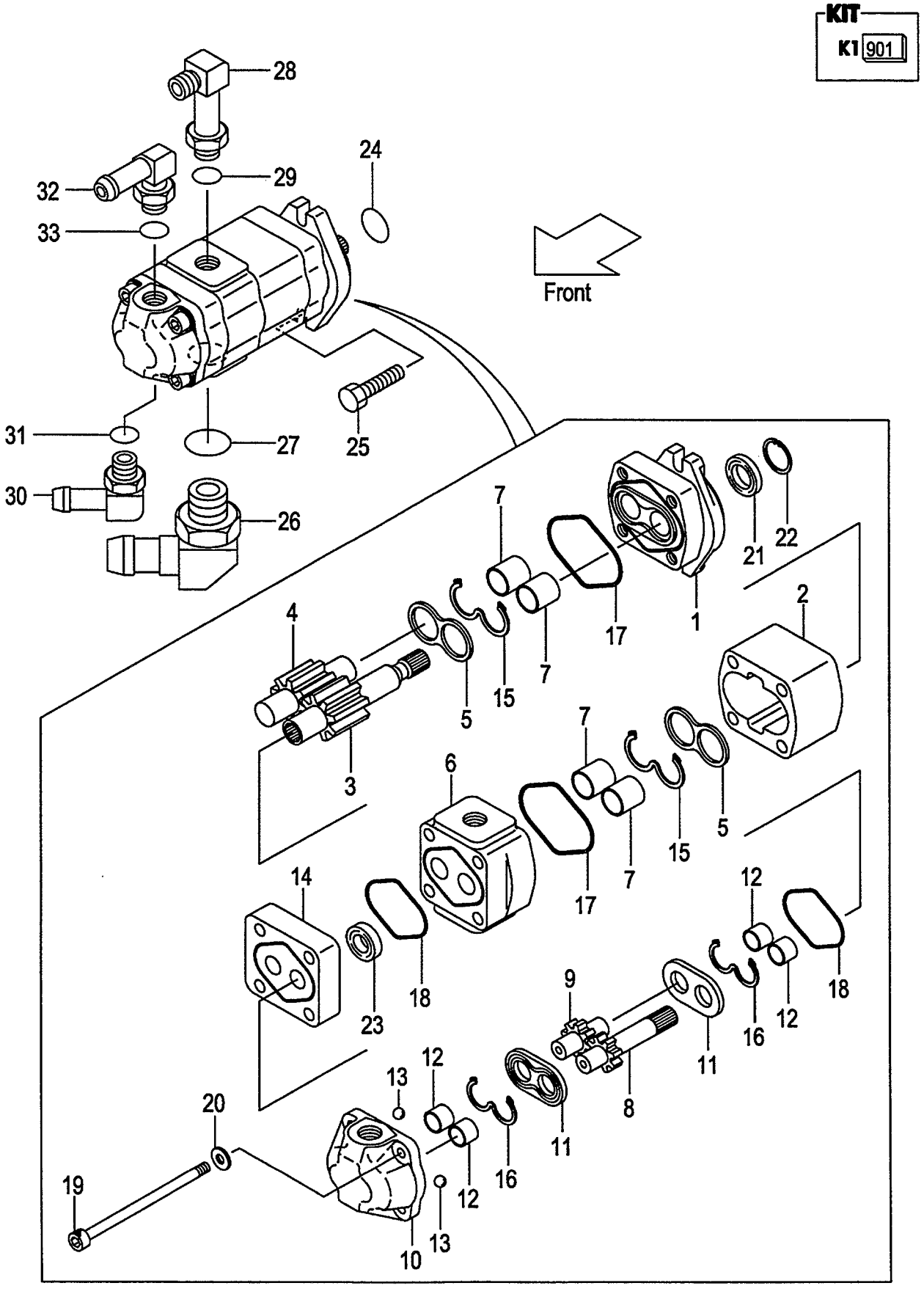

A:FD20W7 FD25W7

Item No	Part No.	Mark	Description		Req'd	Remarks : Serial No.
A1	133H7-10301		PUMP-ASSY,GEAR	ｷﾞﾔｰﾎﾟﾝﾌﾟｱｯｾﾝ	1	INC.1-23
901	R-403-24323	K1	KIT,SEAL	ｼｰﾙｷｯﾄ	1	INC.15-18,21,23
1	NO PART NO.	#	COVER,FRONT	ｶﾊﾞｰ	1	
2	NO PART NO.	#	BODY,1	ﾎﾞﾃﾞｨ	1	
3	NO PART NO.	#	GEAR,DRIVE,1	ｷﾞﾔｰ	1	
4	NO PART NO.	#	GEAR,DRIVEN,1	ｷﾞﾔｰ	1	
5	NO PART NO.	#	PLATE,SIDE,1	ﾌﾟﾚｰﾄ	2	
6	NO PART NO.	#	PLATE,ADAPTER	ﾌﾟﾚｰﾄ	1	
7	NO PART NO.	#	BUSHING,1	ﾌﾞｯｼﾝｸﾞ	4	
8	NO PART NO.	#	GEAR,DRIVE,2	ｷﾞﾔｰ	1	
9	NO PART NO.	#	GEAR,DRIVEN,2	ｷﾞﾔｰ	1	
10	NO PART NO.	#	BODY,2	ﾎﾞﾃﾞｨ	1	
11	NO PART NO.	#	PLATE,SIDE,2	ﾌﾟﾚｰﾄ	2	
12	NO PART NO.	#	BUSHING,2	ﾌﾞｯｼﾝｸﾞ	4	
13	NO PART NO.	#	BALL,STEEL	ﾎﾞｰﾙ	2	
14	NO PART NO.	#	SUB-PLATE,ADAPTER	ｻﾌﾞﾌﾟﾚｰﾄ	1	
15	NO PART NO.	#*	GASKET,1	ｶﾞｽｹｯﾄ	2	
16	NO PART NO.	#*	GASKET,2	ｶﾞｽｹｯﾄ	2	
17	NO PART NO.	#*	GASKET,1	ｶﾞｽｹｯﾄ	2	
18	NO PART NO.	#*	GASKET,2	ｶﾞｽｹｯﾄ	2	
19	R-402-65004-28		BOLT	ﾎﾞﾙﾄ	4	
20	R-402-00710-12		WASHER	ﾜｯｼｬ	4	
21	NO PART NO.	#*	SEAL,OIL	ｼｰﾙ	1	
22	NO PART NO.	#	RING,SNAP	ｽﾅｯﾌﾟﾘﾝｸﾞ	1	
23	NO PART NO.	#*	SEAL,OIL	ｼｰﾙ	1	
24	03340-00140		O-RING	Oﾘﾝｸﾞ	1	
25	01185-10055		BOLT	ﾎﾞﾙﾄ	2	
A2	239H7-60201		ELBOW-ASSY	ｴﾙﾎﾞｱｯｾﾝ	1	INC.26,27
26	NO PART NO.	#	ELBOW	ｴﾙﾎﾞ	1	
27	03320-00290		O-RING	Oﾘﾝｸﾞ	1	
A3	04150-20404		ELBOW-ASSY	ｴﾙﾎﾞｱｯｾﾝ	1	INC.28,29
28	NO PART NO.	#	ELBOW	ｴﾙﾎﾞ	1	
29	03320-00180		O-RING	Oﾘﾝｸﾞ	1	
A4	234H7-62351		FITTING-ASSY,HOSE	ﾎｰｽﾌｨｯﾃｨﾝｸﾞｱｯｾﾝ	1	INC.30,31
30	NO PART NO.	#	FITTING,HOSE	ﾌｨｯﾃｨﾝｸﾞ	1	
31	03320-00180		O-RING	Oﾘﾝｸﾞ	1	
A5	234H7-62301		FITTING-ASSY,HOSE	ﾎｰｽﾌｨｯﾃｨﾝｸﾞｱｯｾﾝ	1	INC.32,33
32	NO PART NO.	#	FITTING,HOSE	ﾌｨｯﾃｨﾝｸﾞ	1	
33	03320-00180		O-RING	Oﾘﾝｸﾞ	1	

FIG.170 CONTROL VALVE [2SV]

(F6027310) コントロールバルブ

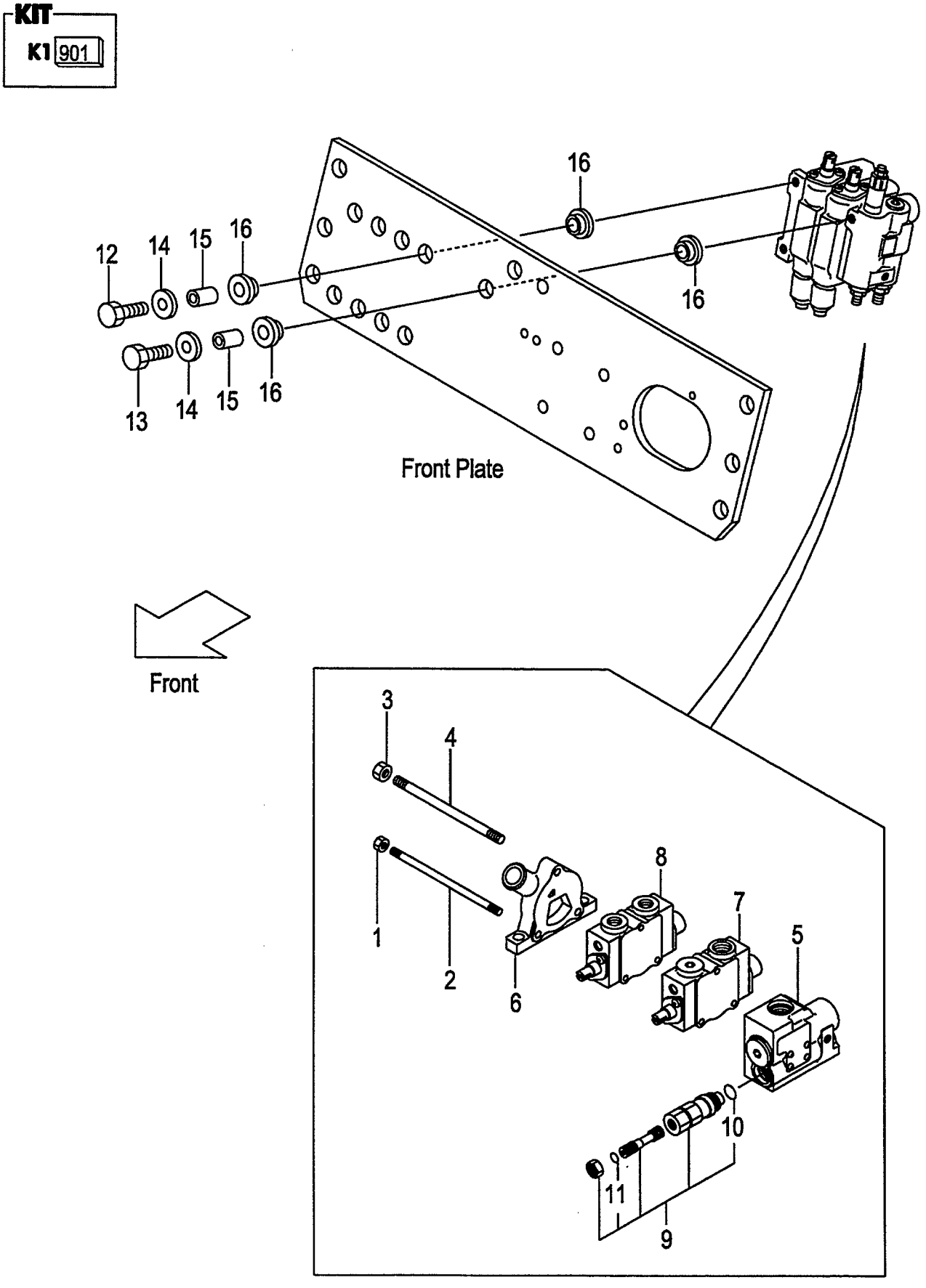

A:FD20C18 FD20T18 FD25C18 FD25T18
B:FD20C7 FD20T7 FD25C7 FD25T7
C:FD20W7 FD25W7

FIG.170
(F6027310)

Item No	Part No.	Mark	Description		Req'd	Remarks : Serial No.
A1	234A7-30202		VALVE-ASSY,CONTROL	ｺﾝﾄﾛｰﾙﾊﾞﾙﾌﾞｱｯｾﾝ	1	INC.1-11
-	534A2-40402		VALVE-ASSY,CONTROL	ｺﾝﾄﾛｰﾙﾊﾞﾙﾌﾞｱｯｾﾝ	1	B [EXC][EXE][EXK][EXN][OBT] [EXB/OBT] INC.1-11
-	534A4-60202		VALVE-ASSY,CONTROL	ｺﾝﾄﾛｰﾙﾊﾞﾙﾌﾞｱｯｾﾝ	1	[VLS]
901	B-2101A-30016	K1	KIT,SEAL	ｼｰﾙｷｯﾄ	1	INC.10,11
1	B-93118-08652		NUT	ﾅｯﾄ	2	
2	B-21011-31106		ROD,TIE	ﾛｯﾄﾞ	2	
3	B-93128-10082		NUT	ﾅｯﾄ	1	
4	B-21011-31105		ROD,TIE	ﾛｯﾄﾞ	1	
5	B-21013-37344		SECTION,INLET	ｲﾝﾚｯﾄｾｸｼｮﾝ	1	SEE FIG.174
-	B-21013-37349		SECTION,INLET	ｲﾝﾚｯﾄｾｸｼｮﾝ	1	B [EXC][EXE][EXK][EXN][OBT] [EXB/OBT]SEE FIG.174
6	B-21011-30134		SECTION,OUTLET	ｱｳﾄﾚｯﾄｾｸｼｮﾝ	1	
7	B-21013-36432		SECTION,SPOOL	ｽﾌﾟｰﾙｾｸｼｮﾝ	1	(LIFT)SEE FIG.175
8	B-21013-36433		SECTION,SPOOL	ｽﾌﾟｰﾙｾｸｼｮﾝ	1	(TILT)SEE FIG.176
9	63130-25614		VALVE,MAIN-RELIEF	ﾊﾞﾙﾌﾞ	1	INC.10,11
10	NO PART NO.	#*	O-RING	Oﾘﾝｸﾞ	1	
11	NO PART NO.	#*	O-RING	Oﾘﾝｸﾞ	1	
12	216G7-32041		BOLT	ﾎﾞﾙﾄ	2	
13	234A7-32001		BOLT	ﾎﾞﾙﾄ	1	
14	216G7-32021		WASHER,PLANE	ﾜｯｼｬ	3	
15	216G7-32011		COLLAR	ｶﾗｰ	3	
16	216G7-32001		RUBBER,VALVE	ﾗﾊﾞｰ	6	

FIG.171 CONTROL VALVE [3SV]

(F6027320) コントロールバルブ

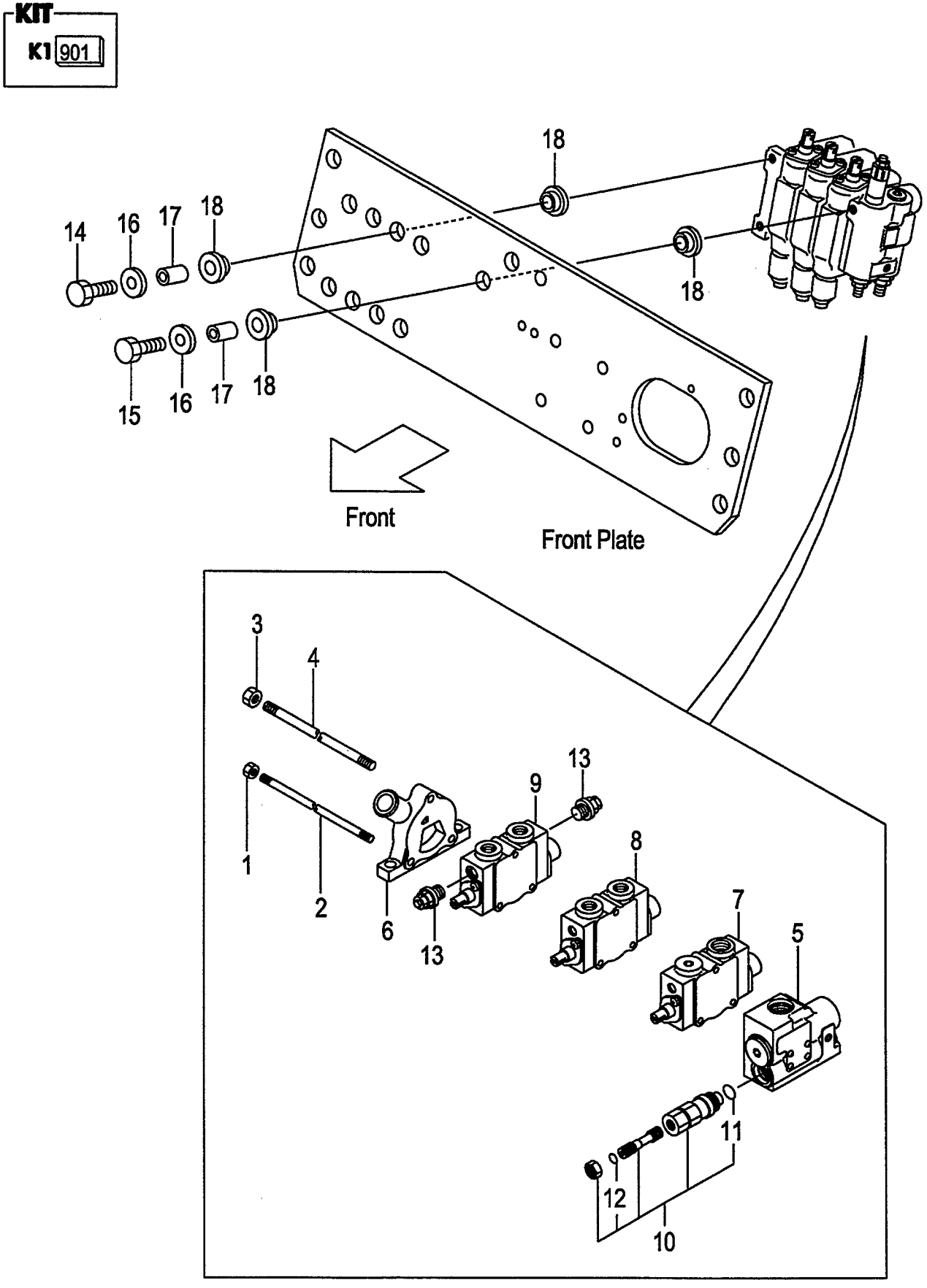

A:FD20C18 FD20T18 FD25C18 FD25T18
B:FD20C7 FD20T7 FD25C7 FD25T7
C:FD20W7 FD25W7

FIG.171
(F6027320)

Item No	Part No.	Mark	Description		Req'd	Remarks : Serial No.
A1	234A7-30302		VALVE-ASSY,CONTROL	ｺﾝﾄﾛｰﾙﾊﾞﾙﾌﾞｱｯｾﾝ	1	[3SV] INC.1-13
-	534A2-40502		VALVE-ASSY,CONTROL	ｺﾝﾄﾛｰﾙﾊﾞﾙﾌﾞｱｯｾﾝ	1	B [3SV/EXC&E&K&N][3SV/OBT] INC.1-13
-	534A2-40502		VALVE-ASSY,CONTROL	ｺﾝﾄﾛｰﾙﾊﾞﾙﾌﾞｱｯｾﾝ	1	B [3SV/EXB/OBT] INC.1-13
-	534A4-60302		VALVE-ASSY,CONTROL	ｺﾝﾄﾛｰﾙﾊﾞﾙﾌﾞｱｯｾﾝ	1	[3SV/VLS]
901	B-2101A-30016	K1	KIT,SEAL	ｼｰﾙｷｯﾄ	1	[3SV] INC.11,12
1	B-93118-08652		NUT	ﾅｯﾄ	2	[3SV]
2	B-21021-30104		ROD,TIE	ﾛｯﾄﾞ	2	[3SV]
3	B-93128-10082		NUT	ﾅｯﾄ	1	[3SV]
4	B-21021-30103		ROD,TIE	ﾛｯﾄﾞ	1	[3SV]
5	B-21013-37344		SECTION,INLET	ｲﾝﾚｯﾄｾｸｼｮﾝ	1	[3SV]SEE FIG.174
-	B-21013-37349		SECTION,INLET	ｲﾝﾚｯﾄｾｸｼｮﾝ	1	B [3SV/EXC&E&K&N][3SV/OBT] SEE FIG.174
-	B-21013-37349		SECTION,INLET	ｲﾝﾚｯﾄｾｸｼｮﾝ	1	B [3SV/EXB/OBT]SEE FIG.174
6	B-21011-30134		SECTION,OUTLET	ｱｳﾄﾚｯﾄｾｸｼｮﾝ	1	[3SV]
7	B-21013-36432		SECTION,SPOOL	ｽﾌﾟｰﾙｾｸｼｮﾝ	1	[3SV](LIFT)SEE FIG.175
8	B-21013-36433		SECTION,SPOOL	ｽﾌﾟｰﾙｾｸｼｮﾝ	1	[3SV](TILT)SEE FIG.176
9	B-21013-39701		SECTION,SPOOL	ｽﾌﾟｰﾙｾｸｼｮﾝ	1	[3SV](3RD)SEE FIG.177
10	63130-25614		VALVE,MAIN-RELIEF	ﾊﾞﾙﾌﾞ	1	[3SV] INC.11,12
11	NO PART NO.	#*	O-RING	Oﾘﾝｸﾞ	1	[3SV]
12	NO PART NO.	#*	O-RING	Oﾘﾝｸﾞ	1	[3SV]
13	B-C0003-30301		VALVE,SHUT-OFF	ﾊﾞﾙﾌﾞ	2	[3SV]
14	216G7-32041		BOLT	ﾎﾞﾙﾄ	2	[3SV]
15	234A7-32001		BOLT	ﾎﾞﾙﾄ	1	[3SV]
16	216G7-32021		WASHER,PLANE	ﾜｯｼｬ	3	[3SV]
17	216G7-32011		COLLAR	ｶﾗｰ	3	[3SV]
18	216G7-32001		RUBBER,VALVE	ﾗﾊﾞｰ	6	[3SV]

FIG.172 CONTROL VALVE [4SV]

(F6027330) コントロールバルブ

KIT
K1 901

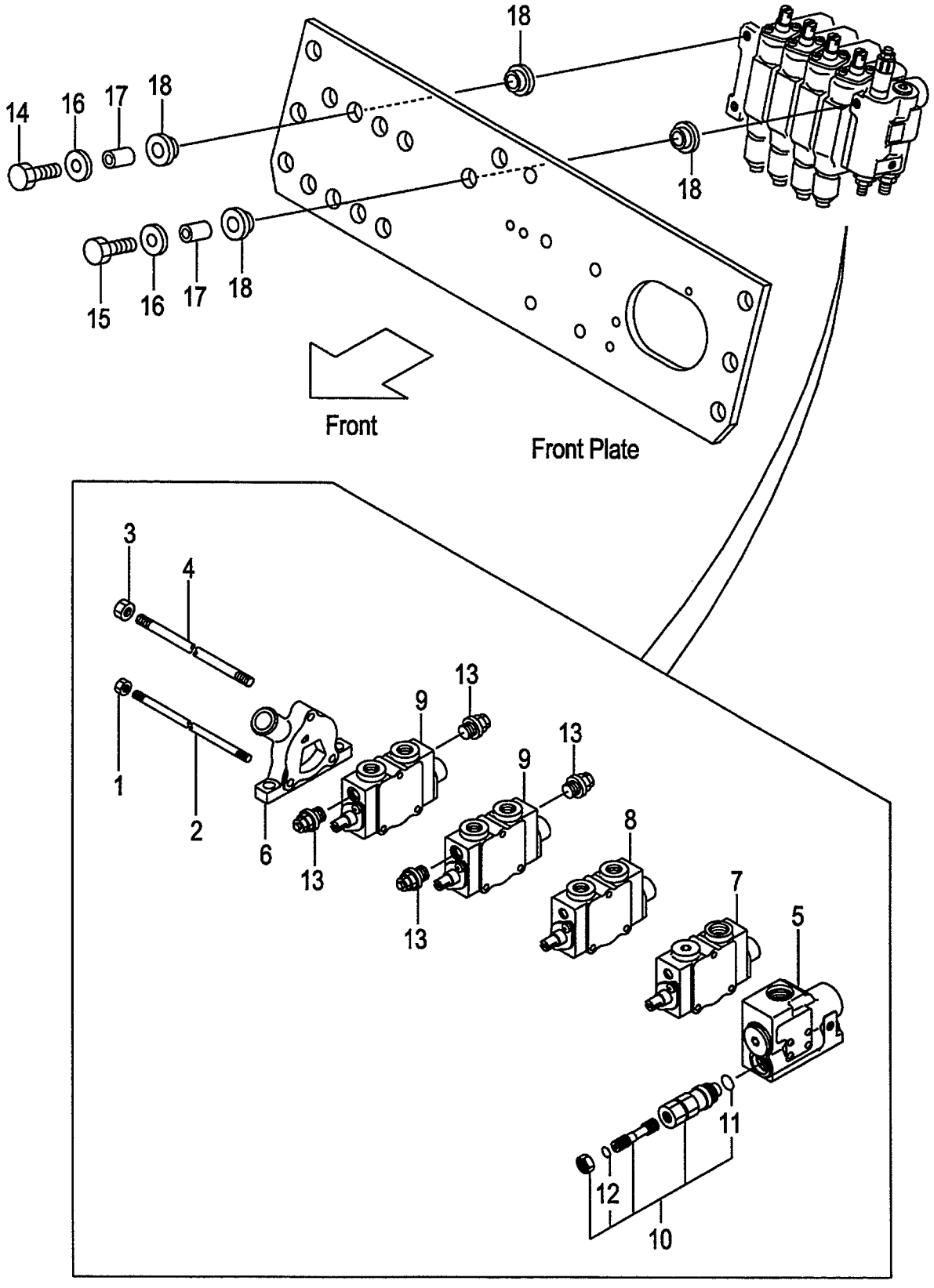

A:FD20C18 FD20T18 FD25C18 FD25T18
B:FD20C7 FD20T7 FD25C7 FD25T7
C:FD20W7 FD25W7

FIG.172
(F6027330)

Item No	Part No.	Mark	Description		Req'd	Remarks : Serial No.
A1	234A7-30402		VALVE-ASSY,CONTROL	ｺﾝﾄﾛｰﾙﾊﾞﾙﾌﾞｱｯｾﾝ	1	[4SV] INC.1-13
-	534A2-40602		VALVE-ASSY,CONTROL	ｺﾝﾄﾛｰﾙﾊﾞﾙﾌﾞｱｯｾﾝ	1	B [4SV/EXC&E&K&N][4SV/OBT] INC.1-13
-	534A2-40602		VALVE-ASSY,CONTROL	ｺﾝﾄﾛｰﾙﾊﾞﾙﾌﾞｱｯｾﾝ	1	B [4SV/EXB/OBT] INC.1-13
-	534A4-60402		VALVE-ASSY,CONTROL	ｺﾝﾄﾛｰﾙﾊﾞﾙﾌﾞｱｯｾﾝ	1	[4SV/VLS]
901	B-2101A-30016	K1	KIT,SEAL	ｼｰﾙｷｯﾄ	1	[4SV] INC.11,12
1	B-93118-08652		NUT	ﾅｯﾄ	2	[4SV]
2	B-21031-30104		ROD,TIE	ﾛｯﾄﾞ	2	[4SV]
3	B-93128-10082		NUT	ﾅｯﾄ	1	[4SV]
4	B-21031-30103		ROD,TIE	ﾛｯﾄﾞ	1	[4SV]
5	B-21013-37344		SECTION,INLET	ｲﾝﾚｯﾄｾｸｼｮﾝ	1	[4SV]SEE FIG.174
-	B-21013-37349		SECTION,INLET	ｲﾝﾚｯﾄｾｸｼｮﾝ	1	B [4SV/EXC&E&K&N][4SV/OBT] SEE FIG.174
-	B-21013-37349		SECTION,INLET	ｲﾝﾚｯﾄｾｸｼｮﾝ	1	B [4SV/EXB/OBT]SEE FIG.174
6	B-21011-30134		SECTION,OUTLET	ｱｳﾄﾚｯﾄｾｸｼｮﾝ	1	[4SV]
7	B-21013-36432		SECTION,SPOOL	ｽﾌﾟｰﾙｾｸｼｮﾝ	1	[4SV](LIFT)SEE FIG.175
8	B-21013-36433		SECTION,SPOOL	ｽﾌﾟｰﾙｾｸｼｮﾝ	1	[4SV](TILT)SEE FIG.176
9	B-21013-39701		SECTION,SPOOL	ｽﾌﾟｰﾙｾｸｼｮﾝ	2	[4SV](3RD,4TH)SEE FIG.177
10	63130-25614		VALVE,MAIN-RELIEF	ﾊﾞﾙﾌﾞ	1	[4SV] INC.11,12
11	NO PART NO.	#*	O-RING	Oﾘﾝｸﾞ	1	[4SV]
12	NO PART NO.	#*	O-RING	Oﾘﾝｸﾞ	1	[4SV]
13	B-C0003-30301		VALVE,SHUT-OFF	ﾊﾞﾙﾌﾞ	4	[4SV]
14	216G7-32041		BOLT	ﾎﾞﾙﾄ	2	[4SV]
15	234A7-32001		BOLT	ﾎﾞﾙﾄ	1	[4SV]
16	216G7-32021		WASHER,PLANE	ﾜｯｼｬ	3	[4SV]
17	216G7-32011		COLLAR	ｶﾗｰ	3	[4SV]
18	216G7-32001		RUBBER,VALVE	ﾗﾊﾞｰ	6	[4SV]

FIG.173 CONTROL VALVE [5SV]

(F6027340) コントロールバルブ

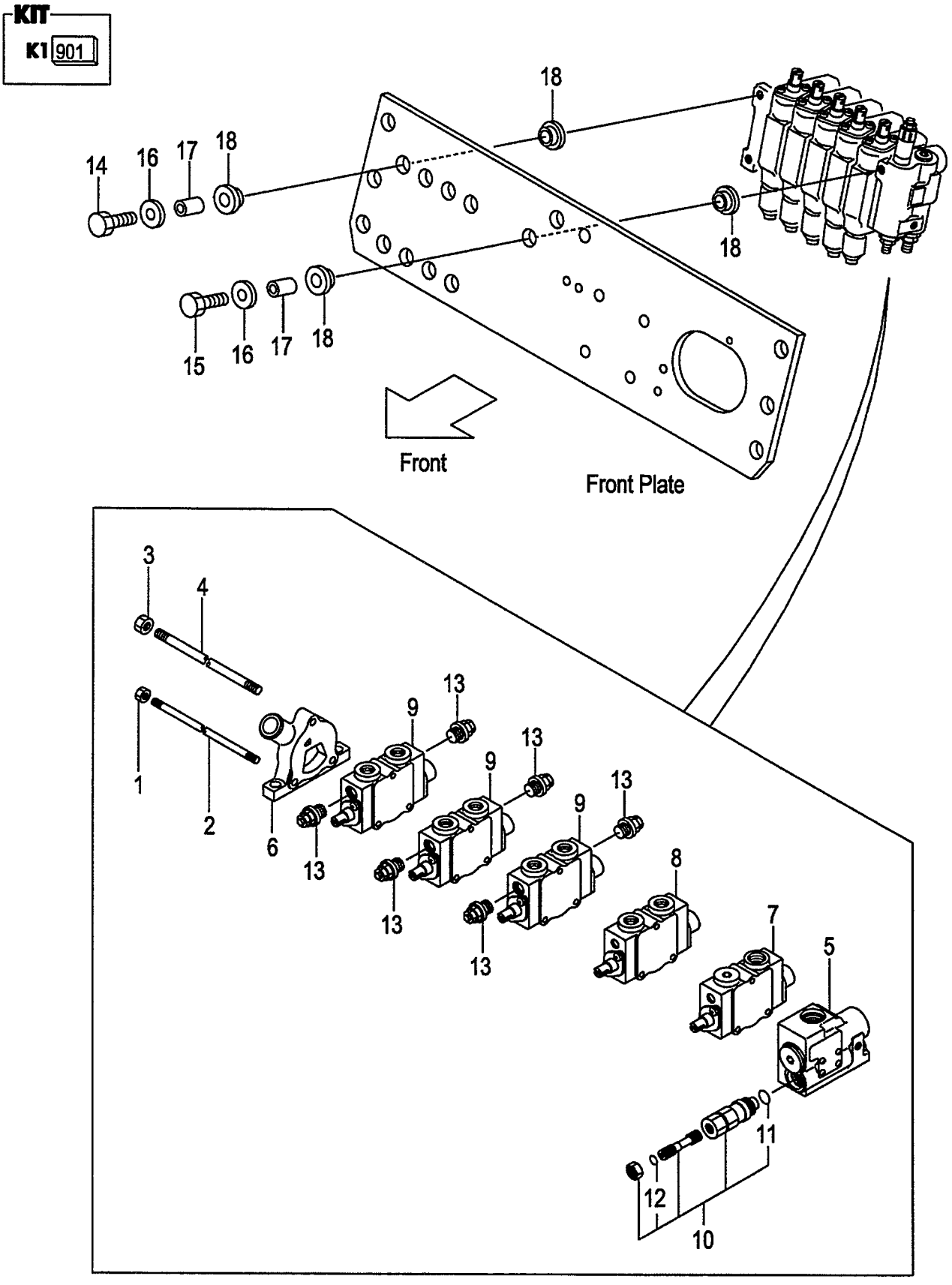

A:FD20C18 FD20T18 FD25C18 FD25T18
B:FD20C7 FD20T7 FD25C7 FD25T7
C:FD20W7 FD25W7

FIG.173
(F6027340)

Item No	Part No.	Mark	Description		Req'd	Remarks : Serial No.
A1	234A7-30502		VALVE-ASSY,CONTROL	ｺﾝﾄﾛｰﾙﾊﾞﾙﾌﾞｱｯｾﾝ	1	[5SV] INC.1-13
-	534A2-40702		VALVE-ASSY,CONTROL	ｺﾝﾄﾛｰﾙﾊﾞﾙﾌﾞｱｯｾﾝ	1	B [5SV/EXC&E&K&N][5SV/OBT] INC.1-13
-	534A2-40702		VALVE-ASSY,CONTROL	ｺﾝﾄﾛｰﾙﾊﾞﾙﾌﾞｱｯｾﾝ	1	B [5SV/EXB/OBT] INC.1-13
-	534A4-60502		VALVE-ASSY,CONTROL	ｺﾝﾄﾛｰﾙﾊﾞﾙﾌﾞｱｯｾﾝ	1	[5SV/VLS]
901	B-2101A-30016	K1	KIT,SEAL	ｼｰﾙｷｯﾄ	1	[5SV] INC.11,12
1	B-93118-08652		NUT	ﾅｯﾄ	2	[5SV]
2	B-21041-30104		ROD,TIE	ﾛｯﾄﾞ	2	[5SV]
3	B-93128-10082		NUT	ﾅｯﾄ	1	[5SV]
4	B-21041-30103		ROD,TIE	ﾛｯﾄﾞ	1	[5SV]
5	B-21013-37344		SECTION,INLET	ｲﾝﾚｯﾄｾｸｼｮﾝ	1	[5SV]SEE FIG.174
-	B-21013-37349		SECTION,INLET	ｲﾝﾚｯﾄｾｸｼｮﾝ	1	B [5SV/EXC&E&K&N][5SV/OBT] SEE FIG.174
-	B-21013-37349		SECTION,INLET	ｲﾝﾚｯﾄｾｸｼｮﾝ	1	B [5SV/EXB/OBT]SEE FIG.174
6	B-21011-30134		SECTION,OUTLET	ｱｳﾄﾚｯﾄｾｸｼｮﾝ	1	[5SV]
7	B-21013-36432		SECTION,SPOOL	ｽﾌﾟｰﾙｾｸｼｮﾝ	1	[5SV](LIFT)SEE FIG.175
8	B-21013-36433		SECTION,SPOOL	ｽﾌﾟｰﾙｾｸｼｮﾝ	1	[5SV](TILT)SEE FIG.176
9	B-21013-39701		SECTION,SPOOL	ｽﾌﾟｰﾙｾｸｼｮﾝ	3	[5SV](3RD,4TH,5TH)SEE FIG.177
10	63130-25614		VALVE,MAIN-RELIEF	ﾊﾞﾙﾌﾞ	1	[5SV] INC.11,12
11	NO PART NO.	#*	O-RING	Oﾘﾝｸﾞ	1	[5SV]
12	NO PART NO.	#*	O-RING	Oﾘﾝｸﾞ	1	[5SV]
13	B-C0003-30301		VALVE,SHUT-OFF	ﾊﾞﾙﾌﾞ	6	[5SV]
14	216G7-32041		BOLT	ﾎﾞﾙﾄ	2	[5SV]
15	234A7-32001		BOLT	ﾎﾞﾙﾄ	1	[5SV]
16	216G7-32021		WASHER,PLANE	ﾜｯｼｬ	3	[5SV]
17	216G7-32011		COLLAR	ｶﾗｰ	3	[5SV]
18	216G7-32001		RUBBER,VALVE	ﾗﾊﾞｰ	6	[5SV]

FIG.174 INLET SECTION
(F6027350) インレットセクション

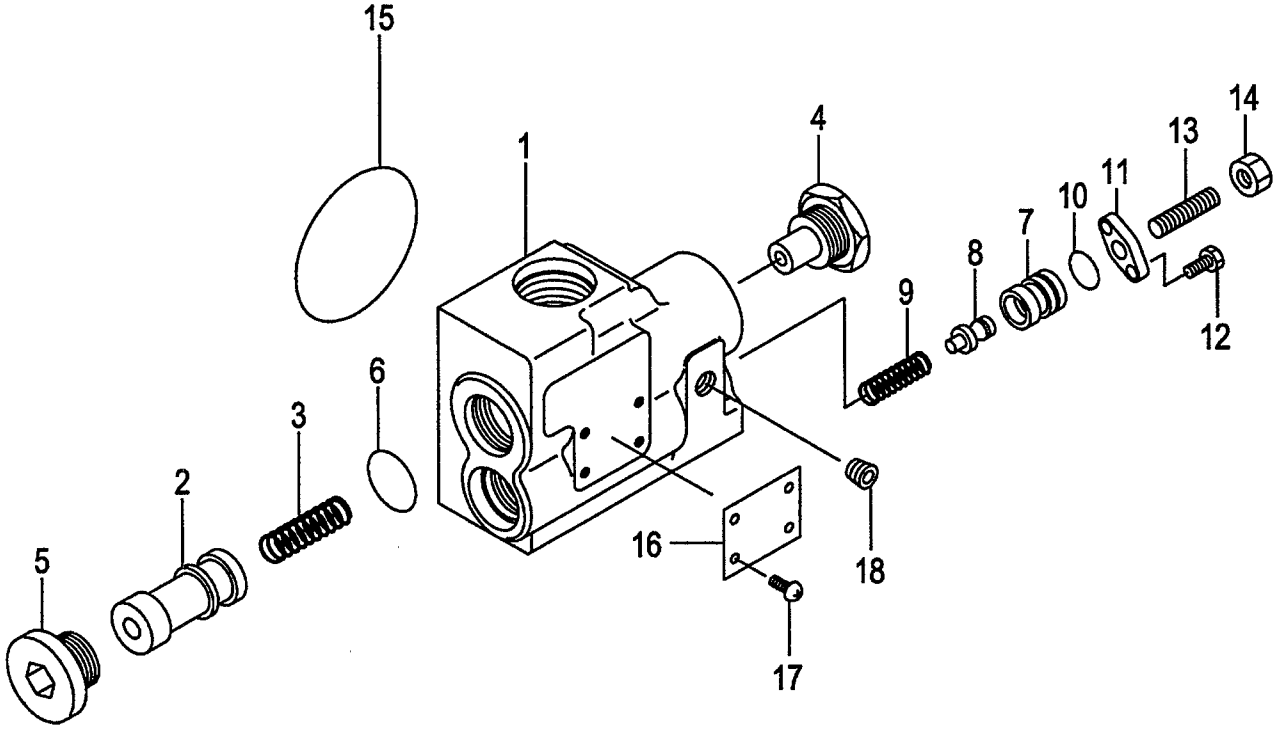

A:FD20C18 FD20T18 FD25C18 FD25T18
B:FD20C7 FD20T7 FD25C7 FD25T7
C:FD20W7 FD25W7

FIG.174
(F6027350)

Item No	Part No.	Mark	Description		Req'd	Remarks : Serial No.
A1	B-21013-37344		SECTION-ASSY,INLET	ｲﾝﾚｯﾄｾｸｼｮﾝｱｯｾﾝ	1	INC.1-18
-	B-21013-37349		SECTION-ASSY,INLET	ｲﾝﾚｯﾄｾｸｼｮﾝｱｯｾﾝ	1	B [EXC][EXE][EXK][EXN][OBT] [EXB/OBT] INC.1-18
1	NO PART NO.	#	HOUSING,INLET	ﾊｳｼﾞﾝｸﾞ	1	
2	NO PART NO.	#	SPOOL	ｽﾌﾟｰﾙ	1	
3	B-21731-30802		SPRING	ｽﾌﾟﾘﾝｸﾞ	1	
4	B-21733-40212		CONNECTOR	ｺﾈｸﾀ	1	
5	B-21731-30613		PLUG	ﾌﾟﾗｸﾞ	1	
6	B-95113-02400		O-RING	Oﾘﾝｸﾞ	1	
7	B-21731-30703		HOUSING	ﾊｳｼﾞﾝｸﾞ	1	
8	B-21731-30502		POPPET	ﾎﾟﾍﾟｯﾄ	1	
9	B-21731-30306		SPRING	ｽﾌﾟﾘﾝｸﾞ	1	
-	B-21731-30307		SPRING	ｽﾌﾟﾘﾝｸﾞ	1	B [EXC][EXE][EXK][EXN][OBT] [EXB/OBT]
10	B-95111-01200		O-RING	Oﾘﾝｸﾞ	1	
11	B-21731-30406		PLATE	ﾌﾟﾚｰﾄ	1	
12	B-92703-06181		BOLT	ﾎﾞﾙﾄ	2	
13	B-91511-08180		SCREW	ｽｸﾘｭ	1	
14	B-93364-08052		NUT	ﾅｯﾄ	1	
15	B-21001-00106		O-RING	Oﾘﾝｸﾞ	1	
16	NO PART NO.	#	PLATE,NAME	ﾌﾟﾚｰﾄ	1	
17	NO PART NO.	#	SCREW	ｽｸﾘｭ	4	
18	B-97123-01111		PLUG	ﾌﾟﾗｸﾞ	1	

FIG.175 SPOOL SECTION (LIFT)

(F6027360) スプールセクション

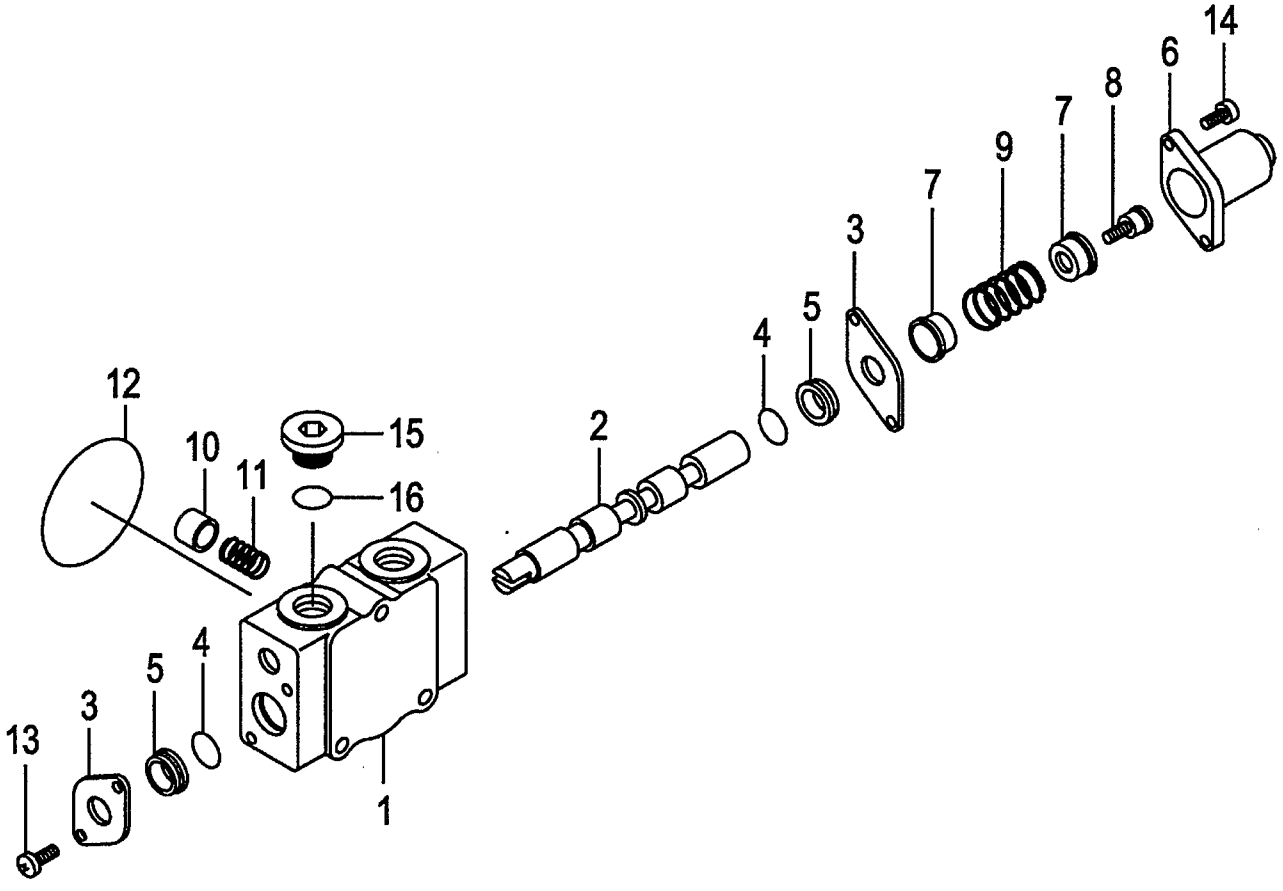

A:FD20C18 FD20T18 FD25C18 FD25T18
B:FD20C7 FD20T7 FD25C7 FD25T7
C:FD20W7 FD25W7

FIG.175
(F6027360)

Item No	Part No.	Mark	Description		Req'd	Remarks : Serial No.
A1	B-21013-36432		SECTION-ASSY,SPOOL	ｽﾌﾟｰﾙｾｸｼｮﾝｱｯｾﾝ	1	INC.1-16
1	NO PART NO.	#	HOUSING,VALVE	ﾊｳｼﾞﾝｸﾞ	1	
2	NO PART NO.	#	SPOOL	ｽﾌﾟｰﾙ	1	
3	B-21011-31702		PLATE	ﾌﾟﾚｰﾄ	2	
4	B-21001-00689		O-RING	Oﾘﾝｸﾞ	2	
5	B-21011-32801		WIPER	ﾜｲﾊﾟ	2	
6	B-21011-31011		CAP	ｷｬｯﾌﾟ	1	
7	B-21011-30702		SEAT	ｼｰﾄ	2	
8	B-21011-30507		SCREW	ｽｸﾘｭ	1	
9	B-21011-30603		SPRING	ｽﾌﾟﾘﾝｸﾞ	1	
10	B-21011-32404		POPPET	ﾎﾟﾍﾟｯﾄ	1	
11	B-21011-30604		SPRING	ｽﾌﾟﾘﾝｸﾞ	1	
12	B-21001-00106		O-RING	Oﾘﾝｸﾞ	1	
13	B-91111-60102		SCREW	ｽｸﾘｭ	2	
14	B-92703-06181		BOLT	ﾎﾞﾙﾄ	2	
15	B-21001-90408		PLUG	ﾌﾟﾗｸﾞ	1	
16	B-95113-01800		O-RING	Oﾘﾝｸﾞ	1	

FIG.176 SPOOL SECTION (TILT)

(F6027370) スプールセクション

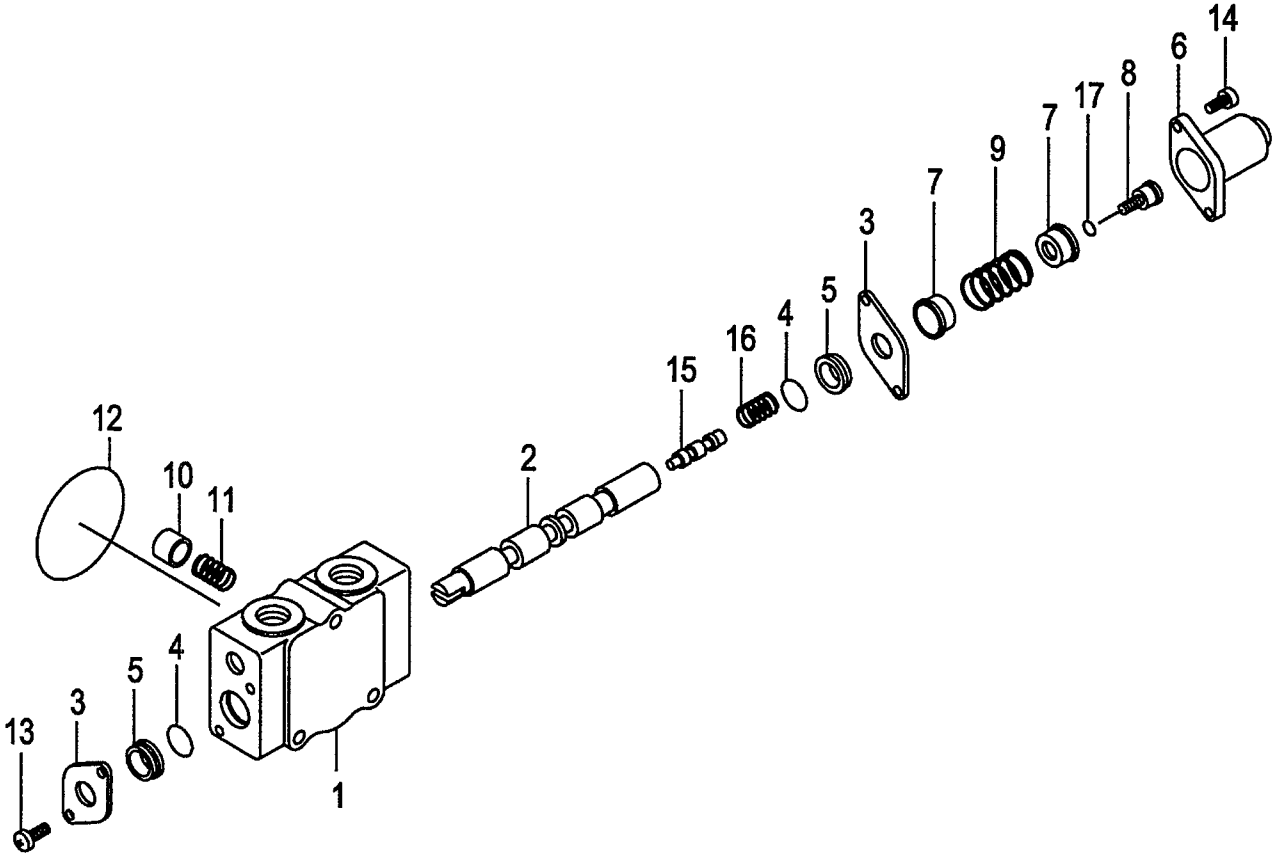

A:FD20C18 FD20T18 FD25C18 FD25T18
B:FD20C7 FD20T7 FD25C7 FD25T7
C:FD20W7 FD25W7

FIG.176
(F6027370)

Item No	Part No.	Mark	Description		Req'd	Remarks : Serial No.
A1	B-21013-36433		SECTION-ASSY,SPOOL	ｽﾌﾟｰﾙｾｸｼｮﾝｱｯｾﾝ	1	INC.1-17
1	NO PART NO.	#	HOUSING,VALVE	ﾊｳｼﾞﾝｸﾞ	1	
2	NO PART NO.	#	SPOOL	ｽﾌﾟｰﾙ	1	
3	B-21011-31702		PLATE	ﾌﾟﾚｰﾄ	2	
4	B-21001-00689		O-RING	Oﾘﾝｸﾞ	2	
5	B-21011-32801		WIPER	ﾜｲﾊﾟ	2	
6	B-21011-31011		CAP	ｷｬｯﾌﾟ	1	
7	B-21011-30702		SEAT	ｼｰﾄ	2	
8	B-21011-30528		SCREW	ｽｸﾘｭ	1	
9	B-21011-30603		SPRING	ｽﾌﾟﾘﾝｸﾞ	1	
10	B-21011-32404		POPPET	ﾎﾟﾍﾟｯﾄ	1	
11	B-21011-30604		SPRING	ｽﾌﾟﾘﾝｸﾞ	1	
12	B-21001-00106		O-RING	Oﾘﾝｸﾞ	1	
13	B-91111-60102		SCREW	ｽｸﾘｭ	2	
14	B-92703-06181		BOLT	ﾎﾞﾙﾄ	2	
15	NO PART NO.	#	VALVE	ﾊﾞﾙﾌﾞ	1	
16	B-21011-30618		SPRING	ｽﾌﾟﾘﾝｸﾞ	1	
17	B-95133-00500		O-RING	Oﾘﾝｸﾞ	1	

FIG.177 SPOOL SECTION [3SV][4SV][5SV]

(F6027380) スプールセクション

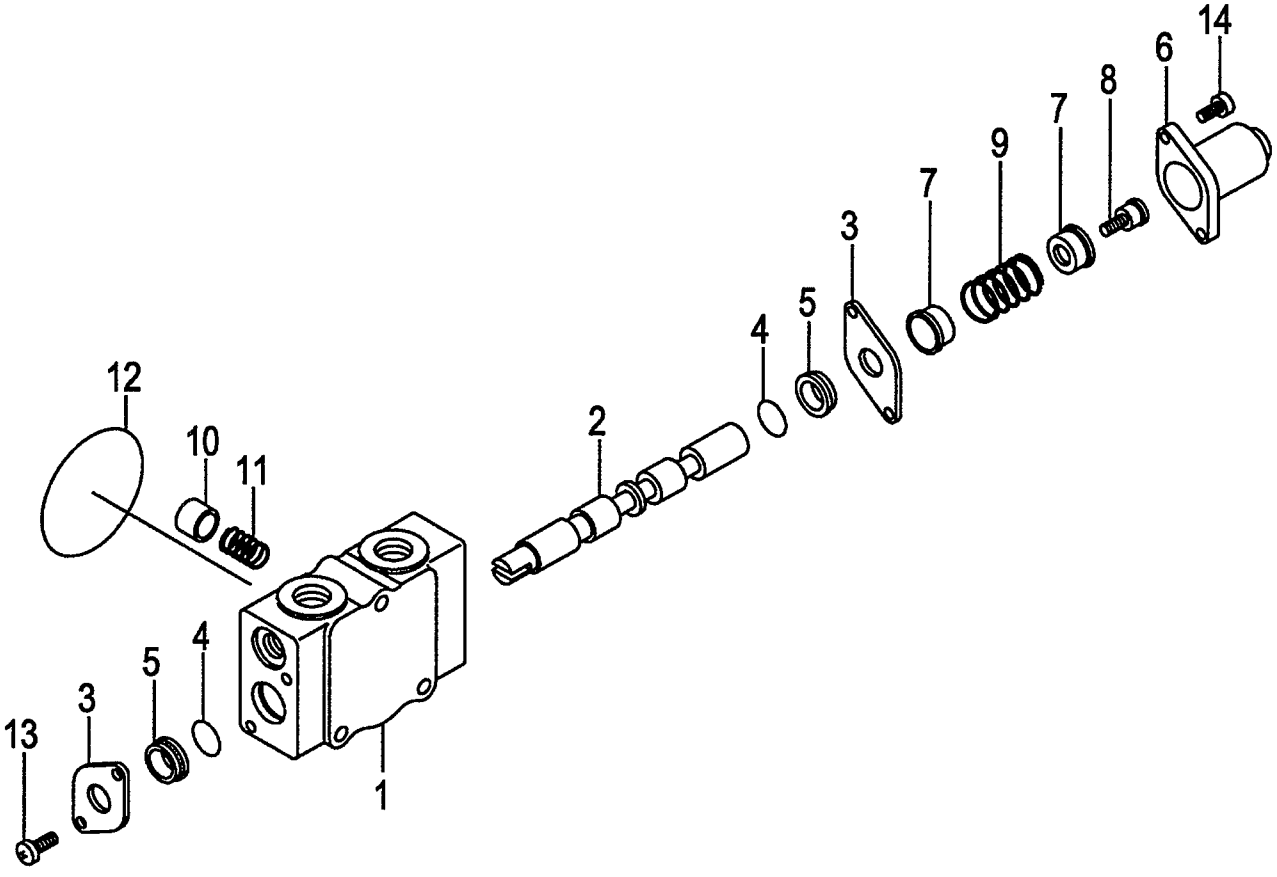

A:FD20C18 FD20T18 FD25C18 FD25T18
B:FD20C7 FD20T7 FD25C7 FD25T7
C:FD20W7 FD25W7

FIG.177
(F6027380)

Item No	Part No.	Mark	Description		Req'd	Remarks : Serial No.
A1	B-21013-39701		SECTION-ASSY,SPOOL	ｽﾌﾟｰﾙｾｸｼｮﾝｱｯｾﾝ	1	[3SV] INC.1-14
-	B-21013-39701		SECTION-ASSY,SPOOL	ｽﾌﾟｰﾙｾｸｼｮﾝｱｯｾﾝ	2	[4SV] INC.1-14
-	B-21013-39701		SECTION-ASSY,SPOOL	ｽﾌﾟｰﾙｾｸｼｮﾝｱｯｾﾝ	3	[5SV] INC.1-14
1	NO PART NO.	#	HOUSING,VALVE	ﾊｳｼﾞﾝｸﾞ	1	[3SV]
-	NO PART NO.	#	HOUSING,VALVE	ﾊｳｼﾞﾝｸﾞ	2	[4SV]
-	NO PART NO.	#	HOUSING,VALVE	ﾊｳｼﾞﾝｸﾞ	3	[5SV]
2	NO PART NO.	#	SPOOL	ｽﾌﾟｰﾙ	1	[3SV]
-	NO PART NO.	#	SPOOL	ｽﾌﾟｰﾙ	2	[4SV]
-	NO PART NO.	#	SPOOL	ｽﾌﾟｰﾙ	3	[5SV]
3	B-21011-31702		PLATE	ﾌﾟﾚｰﾄ	2	[3SV]
-	B-21011-31702		PLATE	ﾌﾟﾚｰﾄ	4	[4SV]
-	B-21011-31702		PLATE	ﾌﾟﾚｰﾄ	6	[5SV]
4	B-21001-00689		O-RING	Oﾘﾝｸﾞ	2	[3SV]
-	B-21001-00689		O-RING	Oﾘﾝｸﾞ	4	[4SV]
-	B-21001-00689		O-RING	Oﾘﾝｸﾞ	6	[5SV]
5	B-21011-32801		WIPER	ﾜｲﾊﾟ	2	[3SV]
-	B-21011-32801		WIPER	ﾜｲﾊﾟ	4	[4SV]
-	B-21011-32801		WIPER	ﾜｲﾊﾟ	6	[5SV]
6	B-21011-31011		CAP	ｷｬｯﾌﾟ	1	[3SV]
-	B-21011-31011		CAP	ｷｬｯﾌﾟ	2	[4SV]
-	B-21011-31011		CAP	ｷｬｯﾌﾟ	3	[5SV]
7	B-21011-30702		SEAT	ｼｰﾄ	2	[3SV]
-	B-21011-30702		SEAT	ｼｰﾄ	4	[4SV]
-	B-21011-30702		SEAT	ｼｰﾄ	6	[5SV]
8	B-21011-30507		SCREW	ｽｸﾘｭ	1	[3SV]
-	B-21011-30507		SCREW	ｽｸﾘｭ	2	[4SV]
-	B-21011-30507		SCREW	ｽｸﾘｭ	3	[5SV]
9	B-21011-30603		SPRING	ｽﾌﾟﾘﾝｸﾞ	1	[3SV]
-	B-21011-30603		SPRING	ｽﾌﾟﾘﾝｸﾞ	2	[4SV]
-	B-21011-30603		SPRING	ｽﾌﾟﾘﾝｸﾞ	3	[5SV]
10	B-21011-32404		POPPET	ﾎﾟﾍﾟｯﾄ	1	[3SV]
-	B-21011-32404		POPPET	ﾎﾟﾍﾟｯﾄ	2	[4SV]
-	B-21011-32404		POPPET	ﾎﾟﾍﾟｯﾄ	3	[5SV]
11	B-21011-30604		SPRING	ｽﾌﾟﾘﾝｸﾞ	1	[3SV]
-	B-21011-30604		SPRING	ｽﾌﾟﾘﾝｸﾞ	2	[4SV]
-	B-21011-30604		SPRING	ｽﾌﾟﾘﾝｸﾞ	3	[5SV]
12	B-21001-00106		O-RING	Oﾘﾝｸﾞ	1	[3SV]
-	B-21001-00106		O-RING	Oﾘﾝｸﾞ	2	[4SV]
-	B-21001-00106		O-RING	Oﾘﾝｸﾞ	3	[5SV]
13	B-91111-60102		SCREW	ｽｸﾘｭ	2	[3SV]
-	B-91111-60102		SCREW	ｽｸﾘｭ	4	[4SV]
-	B-91111-60102		SCREW	ｽｸﾘｭ	6	[5SV]
14	B-92703-06181		BOLT	ﾎﾞﾙﾄ	2	[3SV]
-	B-92703-06181		BOLT	ﾎﾞﾙﾄ	4	[4SV]
-	B-92703-06181		BOLT	ﾎﾞﾙﾄ	6	[5SV]

FIG.178 CONTROL VALVE FITTING

(F6027390) コントロールバルブフィッティング

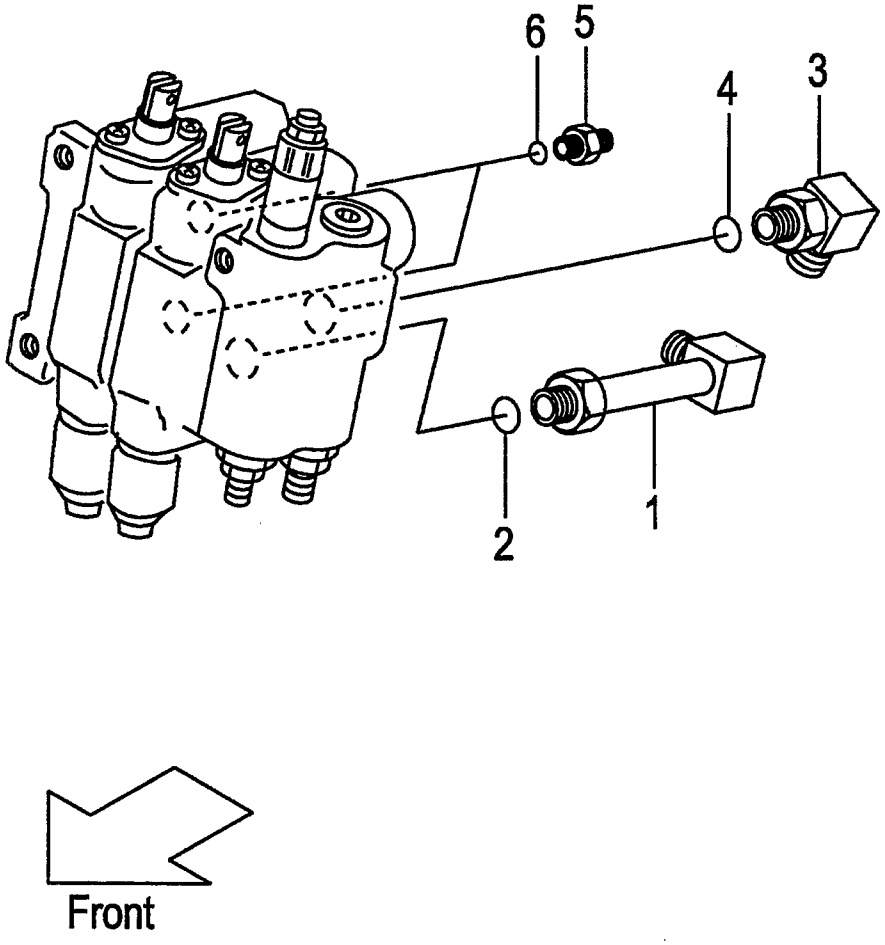

FIG.178
(F6027390)

A:FD20C18 FD20T18 FD25C18 FD25T18
B:FD20C7 FD20T7 FD25C7 FD25T7 FD20W7 FD25W7

Item No	Part No.	Mark	Description		Req'd	Remarks : Serial No.
A1	22777-60301		ELBOW-ASSY	ｴﾙﾎﾞｱｯｾﾝ	1	INC.1,2
1	NO PART NO.	#	ELBOW	ｴﾙﾎﾞ	1	
2	03320-00180		O-RING	Oﾘﾝｸﾞ	1	
A2	04150-30404		ELBOW-ASSY	ｴﾙﾎﾞｱｯｾﾝ	1	INC.3,4
3	NO PART NO.	#	ELBOW	ｴﾙﾎﾞ	1	
4	03320-00180		O-RING	Oﾘﾝｸﾞ	1	
A3	277H7-60601		NIPPLE-ASSY	ﾆｯﾌﾟﾙｱｯｾﾝ	2	INC.5,6
5	NO PART NO.	#	NIPPLE	ﾆｯﾌﾟﾙ	2	
6	03320-00140		O-RING	Oﾘﾝｸﾞ	2	

FIG.179 VALVE CONTROL [2SV]

(F60273A0) ﾊﾞﾙﾌﾞｺﾝﾄﾛｰﾙ

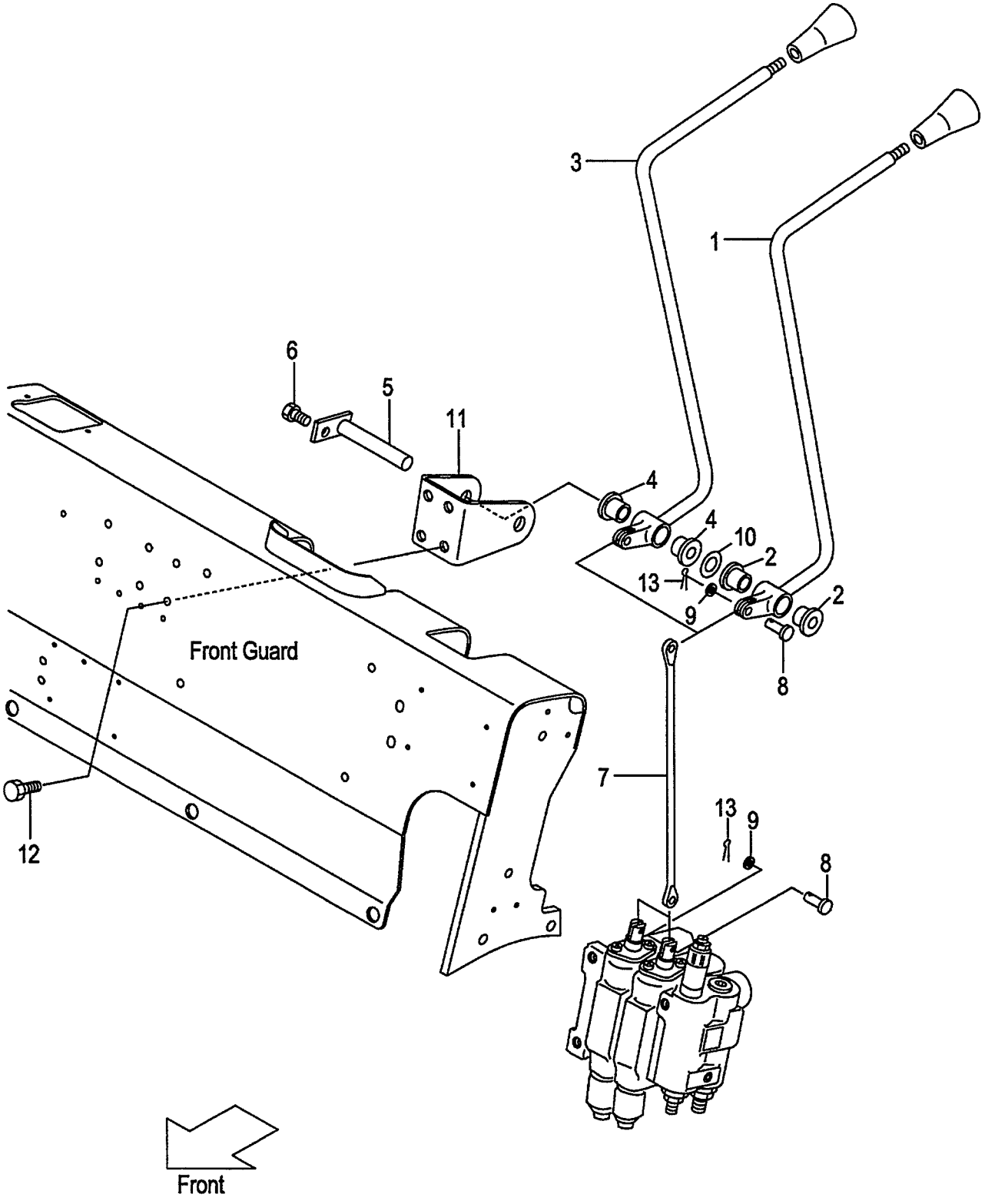

FIG.179
(F60273A0)

A:FD20C18 FD20T18 FD25C18 FD25T18
B:FD20C7 FD20T7 FD25C7 FD25T7 FD20W7 FD25W7

Item No	Part No.	Mark	Description		Req'd	Remarks : Serial No.
A1	216G7-40012		LEVER-ASSY,LIFT	ﾘﾌﾄﾚﾊﾞｰｱｯｾﾝ	1	INC.1,2
1	NO PART NO.	#	LEVER,LIFT	ﾚﾊﾞｰ	1	
2	214A7-42071		BUSHING	ﾌﾞｯｼﾝｸﾞ	2	
A2	216G7-40022		LEVER-ASSY,TILT	ﾃｨﾙﾄﾚﾊﾞｰｱｯｾﾝ	1	INC.3,4
3	NO PART NO.	#	LEVER,TILT	ﾚﾊﾞｰ	1	
4	214A7-42071		BUSHING	ﾌﾞｯｼﾝｸﾞ	2	
5	23647-40041		SHAFT,2SV-LEVER	ｼｬﾌﾄ	1	
-	529F3-70401		SHAFT,2SV-LEVER	ｼｬﾌﾄ	1	[FC]
6	01183-06012		BOLT	ﾎﾞﾙﾄ	1	
7	214A7-42171		JOINT	ｼﾞｮｲﾝﾄ	2	
8	22717-40061		PIN,CLEVIS	ﾋﾟﾝ	4	
9	02000-00005		WASHER	ﾜｯｼｬ	4	
10	22517-40051		SHIM,T-0.2	ｼﾑ	3	
11	216G7-42001		BRACKET,VALVE-LEVER	ﾌﾞﾗｹｯﾄ	1	
12	216H3-92281		BOLT	ﾎﾞﾙﾄ	4	
13	02200-16010		PIN,COTTER	ﾋﾟﾝ	4	

FIG.180 VALVE CONTROL [3SV]

(F60273B0) ﾊﾞﾙﾌﾞｺﾝﾄﾛｰﾙ

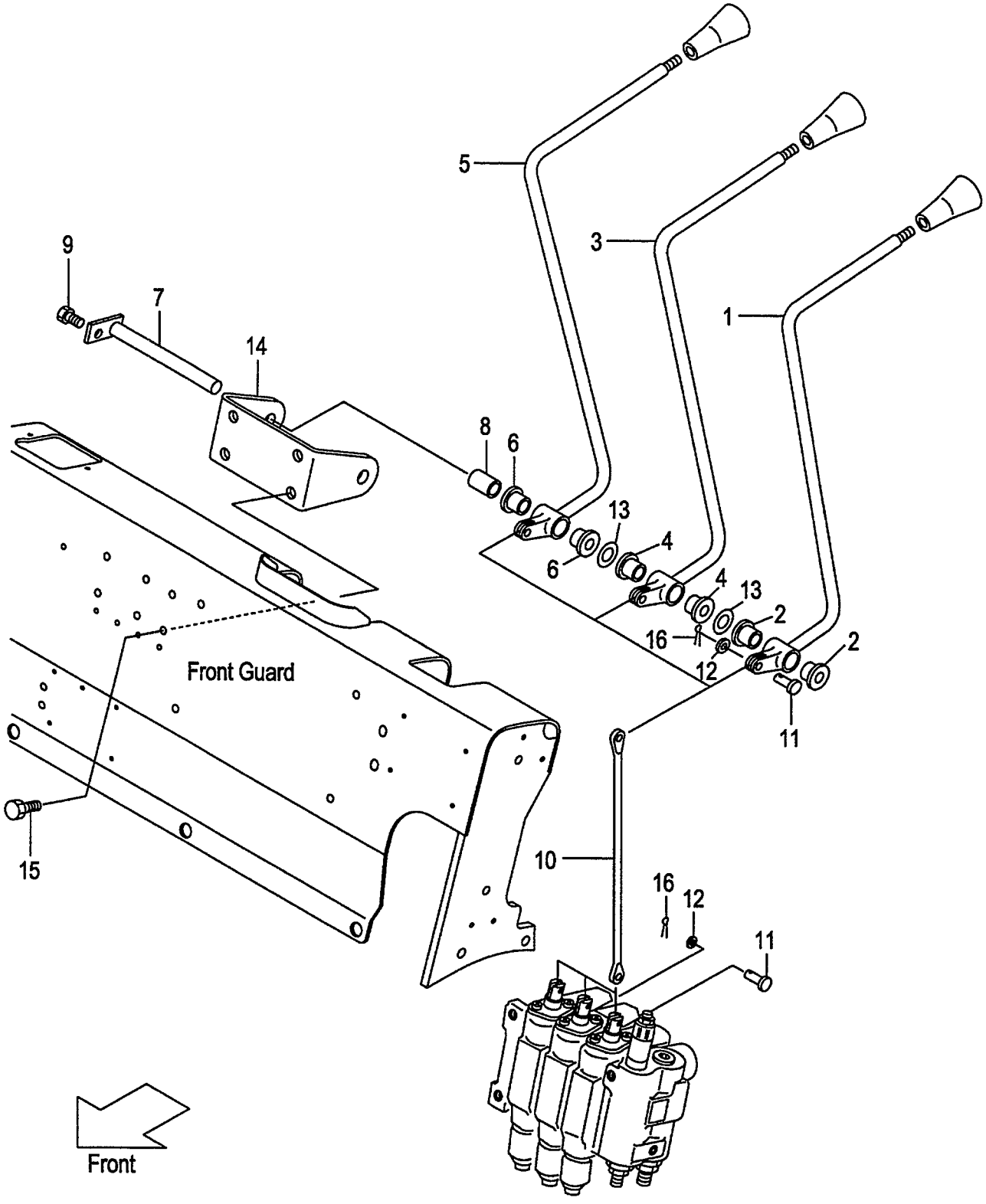

A:FD20C18 FD20T18 FD25C18 FD25T18
B:FD20C7 FD20T7 FD25C7 FD25T7 FD20W7 FD25W7

Item No	Part No.	Mark	Description		Req'd	Remarks : Serial No.
A1	216G7-40012		LEVER-ASSY,LIFT	ﾘﾌﾄﾚﾊﾞｰｱｯｾﾝ	1	[3SV] INC.1,2
1	NO PART NO.	#	LEVER,LIFT	ﾚﾊﾞｰ	1	[3SV]
2	214A7-42071		BUSHING	ﾌﾞｯｼﾝｸﾞ	2	[3SV]
A2	216G7-40022		LEVER-ASSY,TILT	ﾃｨﾙﾄﾚﾊﾞｰｱｯｾﾝ	1	[3SV] INC.3,4
3	NO PART NO.	#	LEVER,TILT	ﾚﾊﾞｰ	1	[3SV]
4	214A7-42071		BUSHING	ﾌﾞｯｼﾝｸﾞ	2	[3SV]
A3	216G7-40032		LEVER-ASSY,THIRD	ﾚﾊﾞｰｱｯｾﾝ	1	[3SV] INC.5,6
5	NO PART NO.	#	LEVER,THIRD	ﾚﾊﾞｰ	1	[3SV]
6	214A7-42071		BUSHING	ﾌﾞｯｼﾝｸﾞ	2	[3SV]
7	23457-42041		SHAFT,3&4SV-LEVER	ｼｬﾌﾄ	1	[3SV]
-	529F3-70411		SHAFT,3&4SV-LEVER	ｼｬﾌﾄ	1	[3SV/FC]
8	23657-42131		COLLAR	ｶﾗｰ	1	[3SV]
9	01183-06012		BOLT	ﾎﾞﾙﾄ	1	[3SV]
10	214A7-42171		JOINT	ｼﾞｮｲﾝﾄ	3	[3SV]
11	22717-40061		PIN,CLEVIS	ﾋﾟﾝ	6	[3SV]
12	02000-00005		WASHER	ﾜｯｼｬ	6	[3SV]
13	22517-40051		SHIM,T-0.2	ｼﾑ	6	[3SV]
14	216G7-42011		BRACKET,VALVE-LEVER	ﾌﾞﾗｹｯﾄ	1	[3SV]
15	216H3-92281		BOLT	ﾎﾞﾙﾄ	4	[3SV]
16	02200-16010		PIN,COTTER	ﾋﾟﾝ	6	[3SV]

FIG.181 VALVE CONTROL [4SV]

(F60273C0) ﾊﾞﾙﾌﾞｺﾝﾄﾛｰﾙ

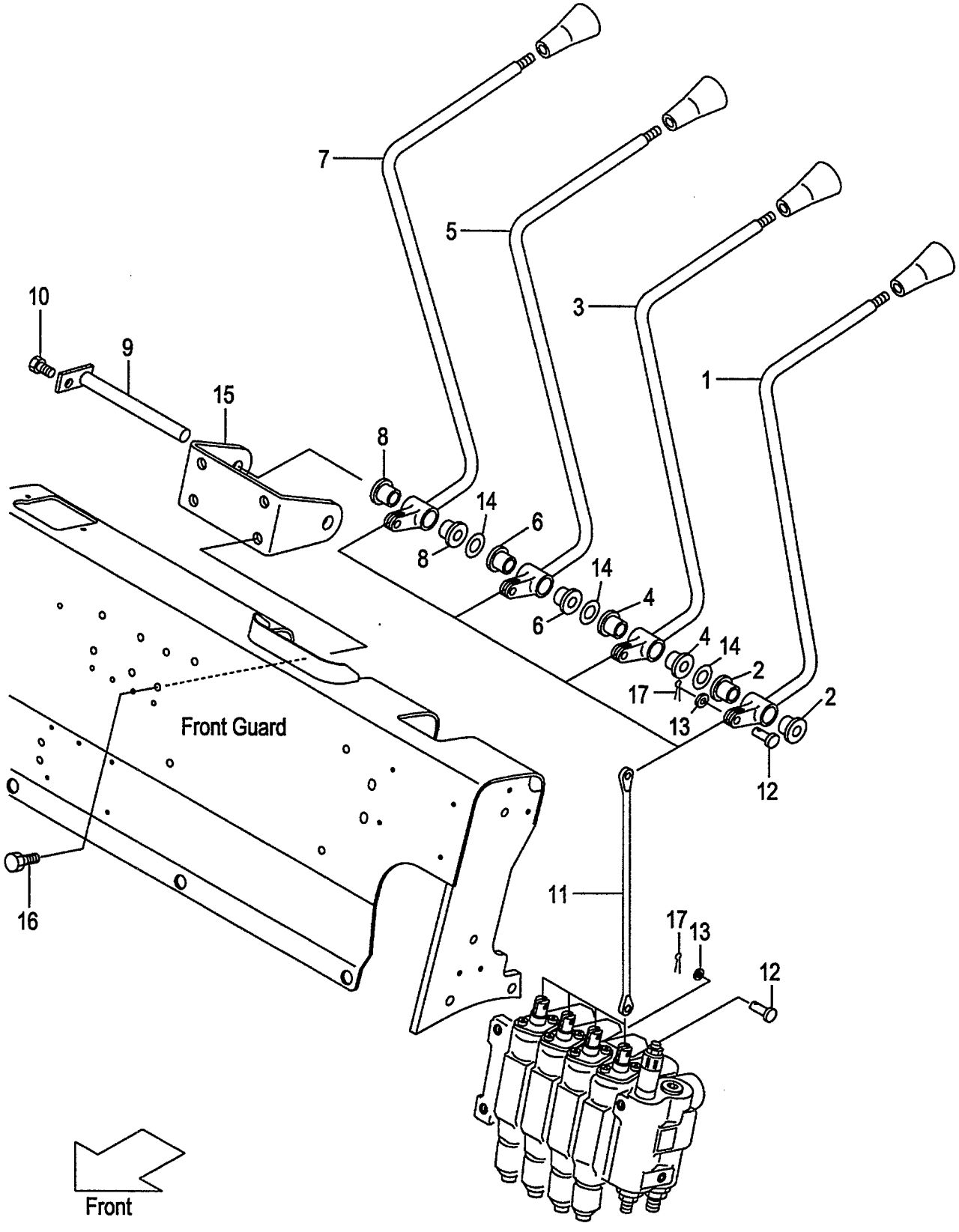

FIG.181
(F60273C0)

A:FD20C18 FD20T18 FD25C18 FD25T18
B:FD20C7 FD20T7 FD25C7 FD25T7 FD20W7 FD25W7

Item No	Part No.	Mark	Description		Req'd	Remarks : Serial No.
A1	216G7-40012		LEVER-ASSY,LIFT	ﾘﾌﾄﾚﾊﾞｰｱｯｾﾝ	1	[4SV] INC.1,2
1	NO PART NO.	#	LEVER,LIFT	ﾚﾊﾞｰ	1	[4SV]
2	214A7-42071		BUSHING	ﾌﾞｯｼﾝｸﾞ	2	[4SV]
A2	216G7-40022		LEVER-ASSY,TILT	ﾃｨﾙﾄﾚﾊﾞｰｱｯｾﾝ	1	[4SV] INC.3,4
3	NO PART NO.	#	LEVER,TILT	ﾚﾊﾞｰ	1	[4SV]
4	214A7-42071		BUSHING	ﾌﾞｯｼﾝｸﾞ	2	[4SV]
A3	216G7-40032		LEVER-ASSY,THIRD	ﾚﾊﾞｰｱｯｾﾝ	1	[4SV] INC.5,6
5	NO PART NO.	#	LEVER,THIRD	ﾚﾊﾞｰ	1	[4SV]
6	214A7-42071		BUSHING	ﾌﾞｯｼﾝｸﾞ	2	[4SV]
A4	216G7-40042		LEVER-ASSY,FOURTH	ﾚﾊﾞｰｱｯｾﾝ	1	[4SV] INC.7,8
7	NO PART NO.	#	LEVER,FOURTH	ﾚﾊﾞｰ	1	[4SV]
8	214A7-42071		BUSHING	ﾌﾞｯｼﾝｸﾞ	2	[4SV]
9	23457-42041		SHAFT,3&4SV-LEVER	ｼｬﾌﾄ	1	[4SV]
-	529F3-70411		SHAFT,3&4SV-LEVER	ｼｬﾌﾄ	1	[4SV/FC]
10	01183-06012		BOLT	ﾎﾞﾙﾄ	1	[4SV]
11	214A7-42171		JOINT	ｼﾞｮｲﾝﾄ	4	[4SV]
12	22717-40061		PIN,CLEVIS	ﾋﾟﾝ	8	[4SV]
13	02000-00005		WASHER	ﾜｯｼｬ	8	[4SV]
14	22517-40051		SHIM,T-0.2	ｼﾑ	9	[4SV]
15	216G7-42011		BRACKET,VALVE-LEVER	ﾌﾞﾗｹｯﾄ	1	[4SV]
16	216H3-92281		BOLT	ﾎﾞﾙﾄ	4	[4SV]
17	02200-16010		PIN,COTTER	ﾋﾟﾝ	8	[4SV]

FIG.182 VALVE CONTROL [5SV]

(F60273D0) ﾊﾞﾙﾌﾞｺﾝﾄﾛｰﾙ

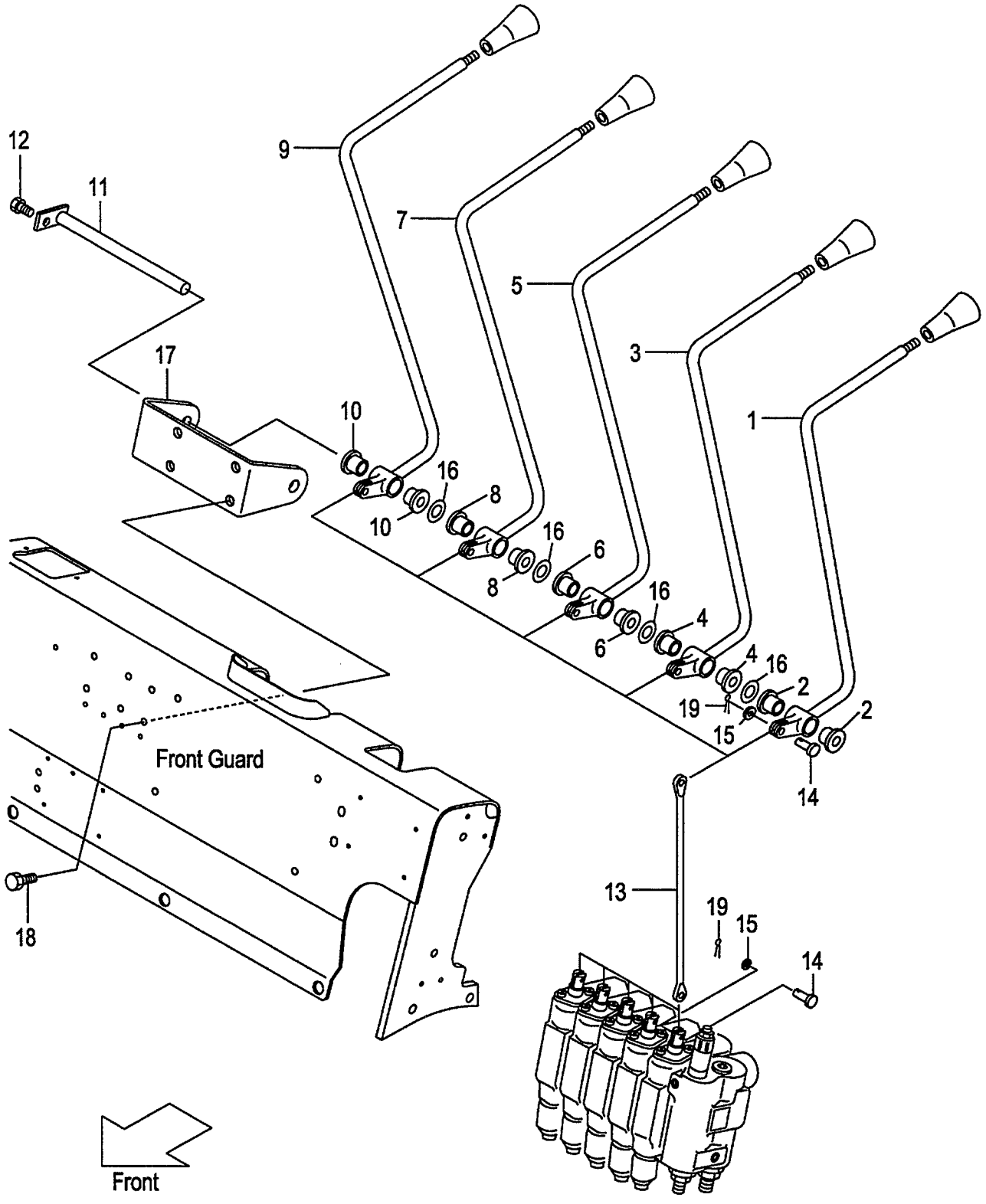

A:FD20C18 FD20T18 FD25C18 FD25T18
B:FD20C7 FD20T7 FD25C7 FD25T7 FD20W7 FD25W7

Item No	Part No.	Mark	Description		Req'd	Remarks : Serial No.
A1	216G7-40012		LEVER-ASSY,LIFT	ﾘﾌﾄﾚﾊﾞｰｱｯｾﾝ	1	[5SV] INC.1,2
1	NO PART NO.	#	LEVER,LIFT	ﾚﾊﾞｰ	1	[5SV]
2	214A7-42071		BUSHING	ﾌﾞｯｼﾝｸﾞ	2	[5SV]
A2	216G7-40022		LEVER-ASSY,TILT	ﾃｨﾙﾄﾚﾊﾞｰｱｯｾﾝ	1	[5SV] INC.3,4
3	NO PART NO.	#	LEVER,TILT	ﾚﾊﾞｰ	1	[5SV]
4	214A7-42071		BUSHING	ﾌﾞｯｼﾝｸﾞ	2	[5SV]
A3	216G7-40032		LEVER-ASSY,THIRD	ﾚﾊﾞｰｱｯｾﾝ	1	[5SV] INC.5,6
5	NO PART NO.	#	LEVER,THIRD	ﾚﾊﾞｰ	1	[5SV]
6	214A7-42071		BUSHING	ﾌﾞｯｼﾝｸﾞ	2	[5SV]
A4	216G7-40042		LEVER-ASSY,FOURTH	ﾚﾊﾞｰｱｯｾﾝ	1	[5SV] INC.7,8
7	NO PART NO.	#	LEVER,FOURTH	ﾚﾊﾞｰ	1	[5SV]
8	214A7-42071		BUSHING	ﾌﾞｯｼﾝｸﾞ	2	[5SV]
A5	234A7-40052		LEVER-ASSY,FIFTH	ﾚﾊﾞｰｱｯｾﾝ	1	[5SV] INC.9,10
9	NO PART NO.	#	LEVER,FIFTH	ﾚﾊﾞｰ	1	[5SV]
10	214A7-42071		BUSHING	ﾌﾞｯｼﾝｸﾞ	2	[5SV]
11	55593-02371		SHAFT,5SV-LEVER	ｼｬﾌﾄ	1	[5SV]
-	529F3-70421		SHAFT,5SV-LEVER	ｼｬﾌﾄ	1	[5SV/FC]
12	01183-06012		BOLT	ﾎﾞﾙﾄ	1	[5SV]
13	214A7-42171		JOINT	ｼﾞｮｲﾝﾄ	5	[5SV]
14	22717-40061		PIN,CLEVIS	ﾋﾟﾝ	10	[5SV]
15	02000-00005		WASHER	ﾜｯｼｬ	10	[5SV]
16	22517-40051		SHIM,T-0.2	ｼﾑ	12	[5SV]
17	234A7-42011		BRACKET,VALVE-LEVER	ﾌﾞﾗｹｯﾄ	1	[5SV]
18	216H3-92281		BOLT	ﾎﾞﾙﾄ	4	[5SV]
19	02200-16010		PIN,COTTER	ﾋﾟﾝ	10	[5SV]

FIG.183 VALVE CONTROL KNOB

(F60273E0) ﾊﾞﾙﾌﾞｺﾝﾄﾛｰﾙﾉﾌﾞ

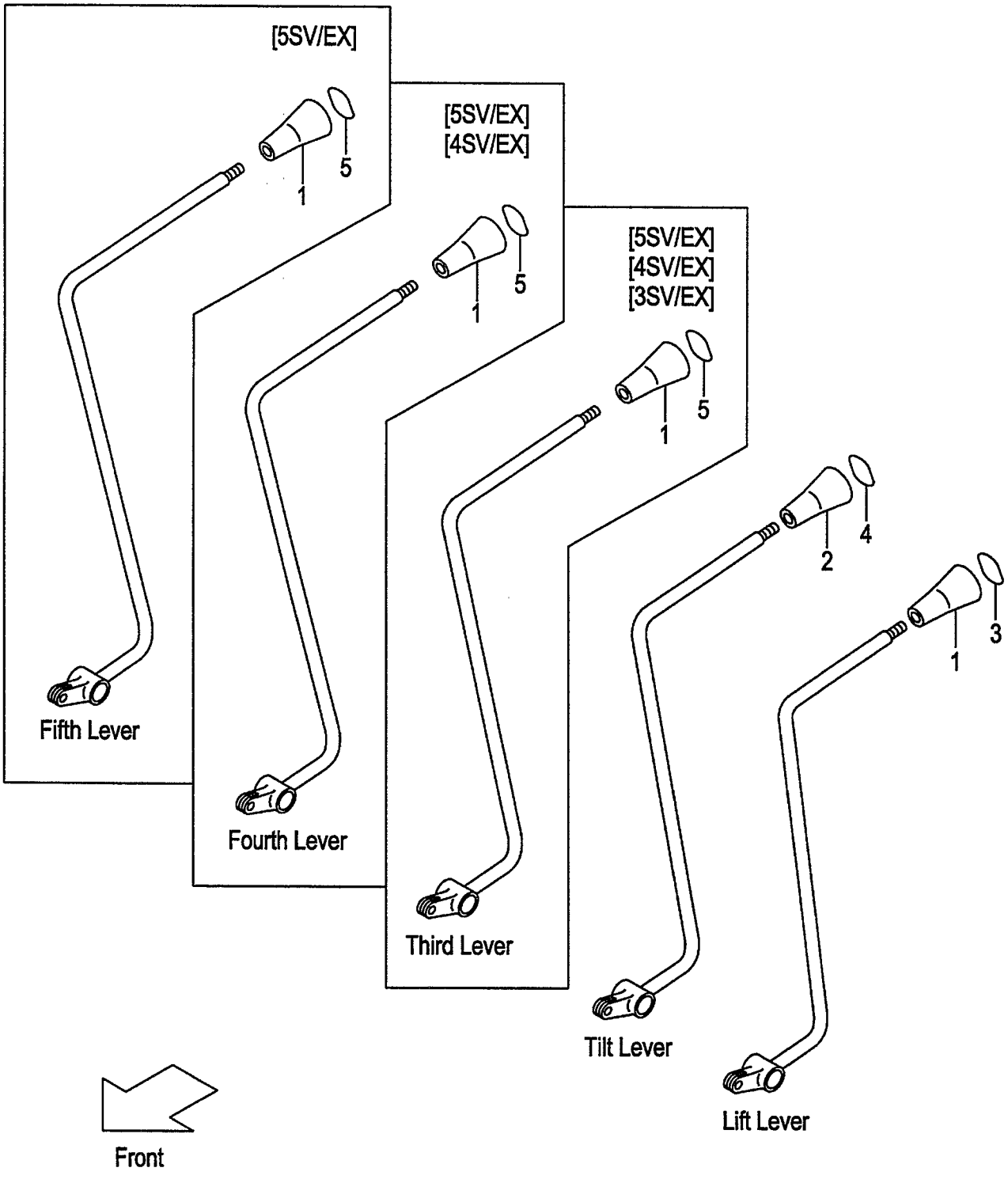

A:FD20C18 FD20T18 FD25C18 FD25T18
B:FD20C7 FD20T7 FD25C7 FD25T7
C:FD20W7 FD25W7

FIG.183
(F60273E0)

Item No	Part No.	Mark	Description	Req'd	Remarks : Serial No.
1	214A7-42181		KNOB,VALVE-LEVER ﾉﾌﾞ	1	
-	214A7-42181		KNOB,VALVE-LEVER ﾉﾌﾞ	2	B [3SV/EX]
-	214A7-42181		KNOB,VALVE-LEVER ﾉﾌﾞ	3	B [4SV/EX]
-	214A7-42181		KNOB,VALVE-LEVER ﾉﾌﾞ	4	B [5SV/EX]
2	281E7-42101		KNOB,VALVE-LEVER ﾉﾌﾞ	1	
3	214A7-42191		DECAL,SYMBOL,LIFT ﾃﾞｶﾙ	1	
4	214A7-42201		DECAL,SYMBOL,TILT ﾃﾞｶﾙ	1	
5	514A2-72411		DECAL,SYMBOL,SPACE ﾃﾞｶﾙ	1	B [3SV/EX]
-	514A2-72411		DECAL,SYMBOL,SPACE ﾃﾞｶﾙ	2	B [4SV/EX]
-	514A2-72411		DECAL,SYMBOL,SPACE ﾃﾞｶﾙ	3	B [5SV/EX]

FIG.184 HYDRAULIC LINE (MAIN)(1/3)(CLUTCH)(TOR-CON)

(F6027620) ﾊｲﾄﾞﾛﾘｯｸﾗｲﾝ(ﾒｲﾝ)(1/3)

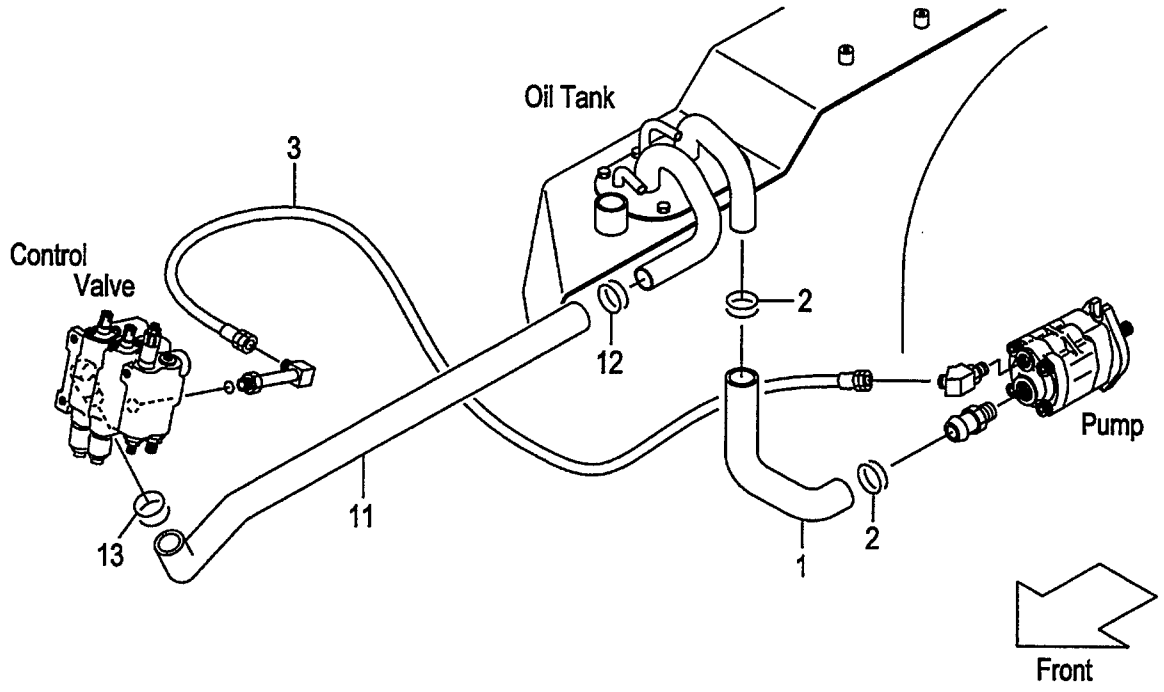

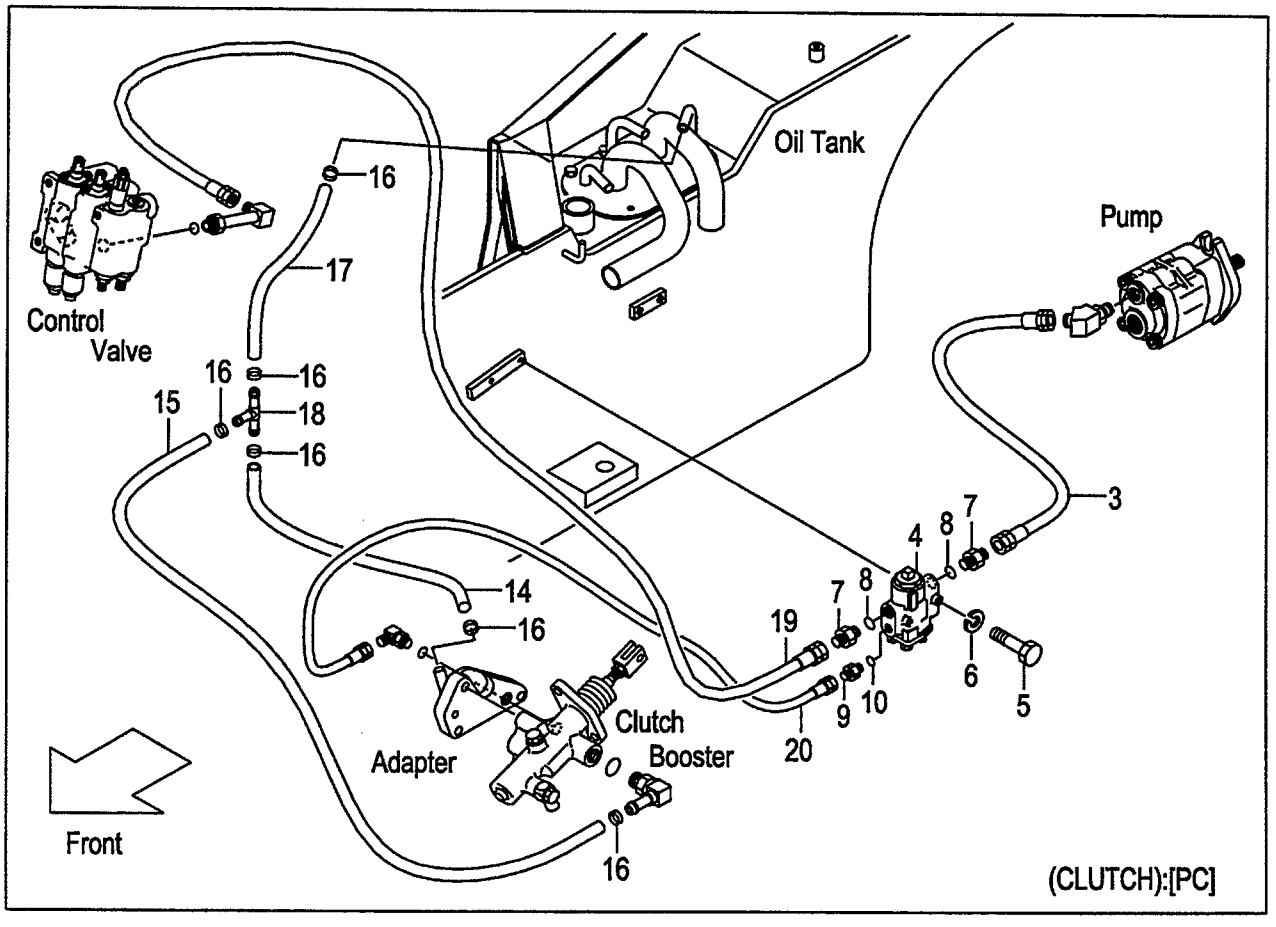

A:FD20C7 FD25C7
B:FD20T7 FD25T7

FIG.184
(F6027620)

Item No	Part No.	Mark	Description		Req'd	Remarks : Serial No.
1	242F7-62001		HOSE,SUCTION	ﾎｰｽ	1	
2	04911-00046		CLIP	ｸﾘｯﾌﾟ	2	
3	04691-04108		HOSE	ﾎｰｽ	1	
-	04691-04048		HOSE	ﾎｰｽ	1	A [PC]
4	234H7-60301		VALVE,FLOW-PRIORITY	ﾊﾞﾙﾌﾞ	1	A [PC]
5	01100-06055		BOLT	ﾎﾞﾙﾄ	2	A [PC]
6	02010-00006		WASHER	ﾜｯｼｬ	2	A [PC]
A1	04134-20404		NIPPLE-ASSY	ﾆｯﾌﾟﾙｱｯｾﾝ	2	A [PC] INC.7,8
7	NO PART NO.	#	NIPPLE	ﾆｯﾌﾟﾙ	2	A [PC]
8	03320-00180		O-RING	Oﾘﾝｸﾞ	2	A [PC]
A2	23657-60311		NIPPLE-ASSY	ﾆｯﾌﾟﾙｱｯｾﾝ	1	A [PC] INC.9,10
9	NO PART NO.	#	NIPPLE	ﾆｯﾌﾟﾙ	1	A [PC]
10	03320-00140		O-RING	Oﾘﾝｸﾞ	1	A [PC]
11	234A7-62101		HOSE,RETURN	ﾎｰｽ	1	
-	234A7-62201		HOSE,RETURN	ﾎｰｽ	1	[4SV][5SV]
12	04911-00044		CLIP	ｸﾘｯﾌﾟ	1	
13	04911-00040		CLIP	ｸﾘｯﾌﾟ	1	
14	04710-04102		HOSE	ﾎｰｽ	1	A [PC]
15	04710-04121		HOSE	ﾎｰｽ	1	A [PC]
16	04911-00021		CLIP	ｸﾘｯﾌﾟ	6	A [PC]
17	04710-04030		HOSE	ﾎｰｽ	1	A [PC]
18	53675-55051		THREE-WAY	ｽﾘｰｳｴｲ	1	A [PC]
19	04691-04048		HOSE	ﾎｰｽ	1	A [PC]
20	04691-02065		HOSE	ﾎｰｽ	1	A [PC]

FIG.185 HYDRAULIC LINE (MAIN)(1/3)

(F6027630) ﾊｲﾄﾞﾛﾘｯｸﾗｲﾝ(ﾒｲﾝ)(1/3)

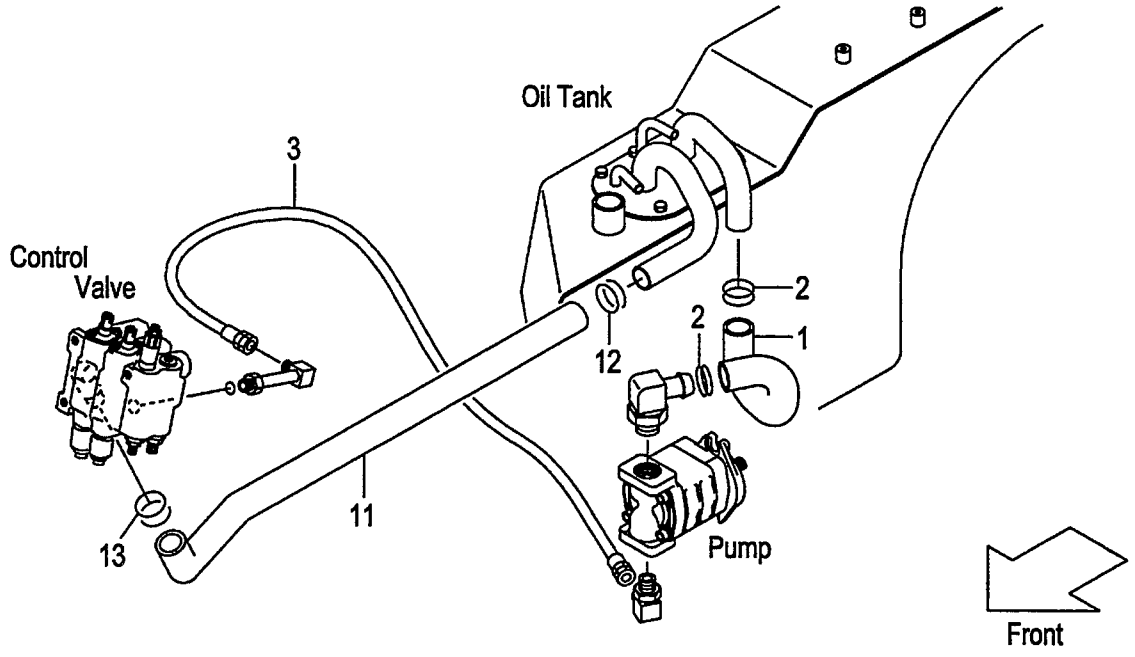

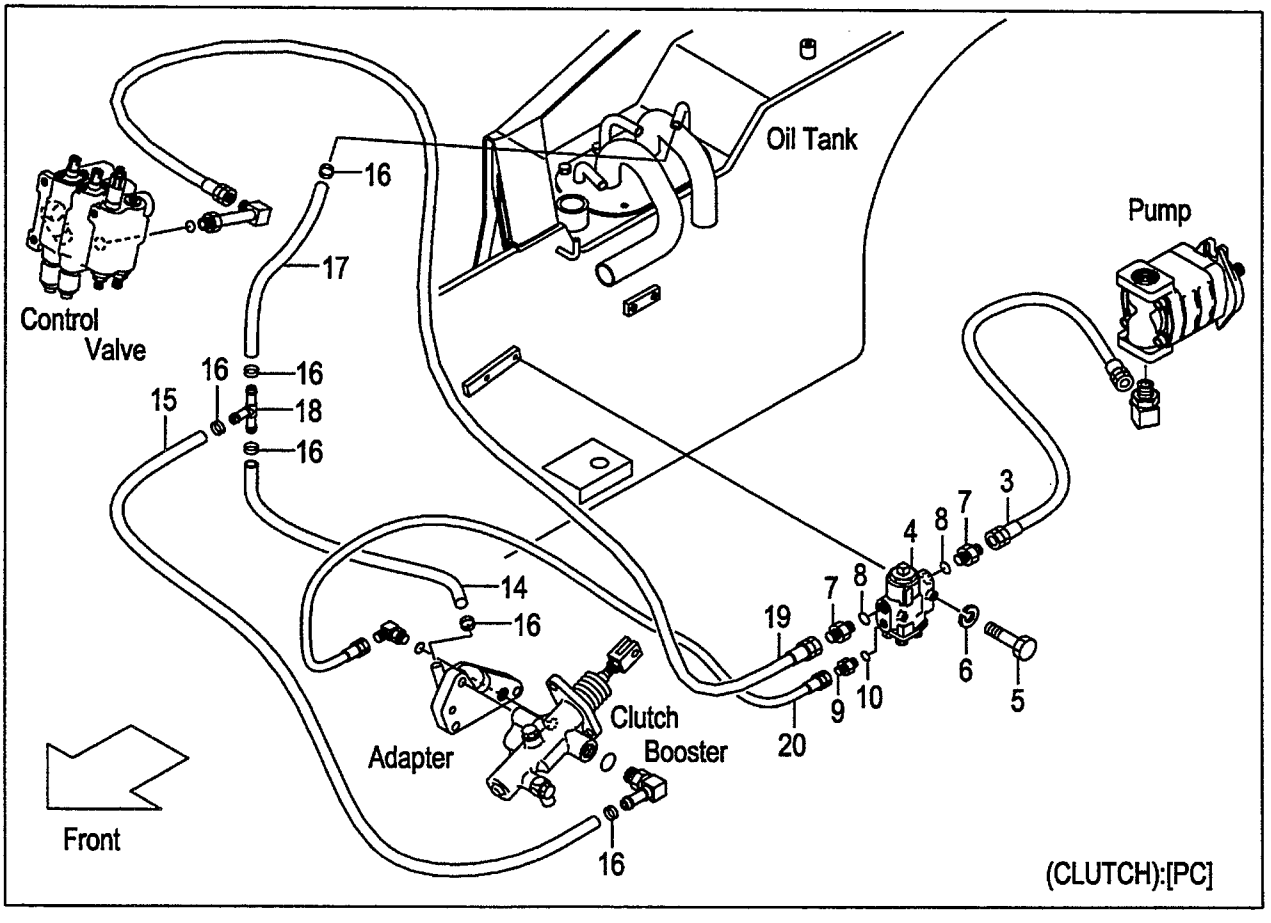

A:FD20C18 FD25C18
B:FD20T18 FD25T18

FIG.185
(F6027630)

Item No	Part No.	Mark	Description		Req'd	Remarks : Serial No.
1	242E7-62001		HOSE,SUCTION	ﾎｰｽ	1	
2	04911-00046		CLIP	ｸﾘｯﾌﾟ	2	
3	04691-04108		HOSE	ﾎｰｽ	1	
-	04691-04048		HOSE	ﾎｰｽ	1	A [PC]
4	234H7-60301		VALVE,FLOW-PRIORITY	ﾊﾞﾙﾌﾞ	1	A [PC]
5	01100-06055		BOLT	ﾎﾞﾙﾄ	2	A [PC]
6	02010-00006		WASHER	ﾜｯｼｬ	2	A [PC]
A1	04134-20404		NIPPLE-ASSY	ﾆｯﾌﾟﾙｱｯｾﾝ	2	A [PC] INC.7,8
7	NO PART NO.	#	NIPPLE	ﾆｯﾌﾟﾙ	2	A [PC]
8	03320-00180		O-RING	Oﾘﾝｸﾞ	2	A [PC]
A2	23657-60311		NIPPLE-ASSY	ﾆｯﾌﾟﾙｱｯｾﾝ	1	A [PC] INC.9,10
9	NO PART NO.	#	NIPPLE	ﾆｯﾌﾟﾙ	1	A [PC]
10	03320-00140		O-RING	Oﾘﾝｸﾞ	1	A [PC]
11	234A7-62101		HOSE,RETURN	ﾎｰｽ	1	
-	234A7-62201		HOSE,RETURN	ﾎｰｽ	1	[4SV][5SV]
12	04911-00044		CLIP	ｸﾘｯﾌﾟ	1	
13	04911-00040		CLIP	ｸﾘｯﾌﾟ	1	
14	04710-04102		HOSE	ﾎｰｽ	1	A [PC]
15	04710-04121		HOSE	ﾎｰｽ	1	A [PC]
16	04911-00021		CLIP	ｸﾘｯﾌﾟ	6	A [PC]
17	04710-04030		HOSE	ﾎｰｽ	1	A [PC]
18	53675-55051		THREE-WAY	ｽﾘｰｳｴｲ	1	A [PC]
19	04691-04048		HOSE	ﾎｰｽ	1	A [PC]
20	04691-02065		HOSE	ﾎｰｽ	1	A [PC]

FIG.186 HYDRAULIC LINE (MAIN)(1/3)(OIL CLUTCH)

(F6027650) ﾊｲﾄﾞﾛﾘｯｸﾗｲﾝ(ﾒｲﾝ)(1/3)

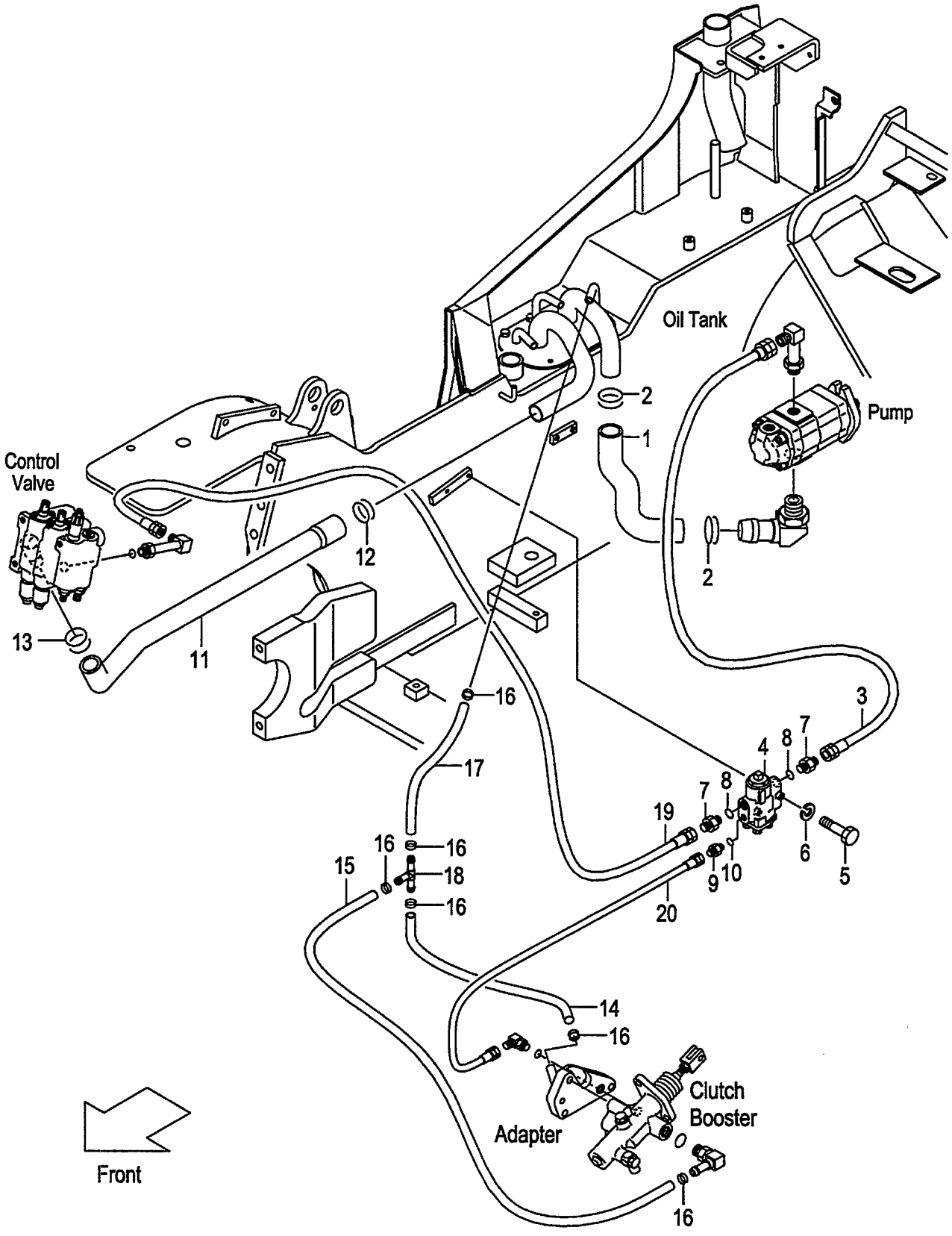

A:FD20W7 FD25W7

Item No	Part No.	Mark	Description		Req'd	Remarks : Serial No.
1	242S7-62001		HOSE,SUCTION	ホース	1	
2	04911-00046		CLIP	クリップ	2	
3	04691-04048		HOSE	ホース	1	
4	234H7-60301		VALVE,FLOW-PRIORITY	バルブ	1	
5	01100-06055		BOLT	ボルト	2	
6	02010-00006		WASHER	ワッシャ	2	
A1	04134-20404		NIPPLE-ASSY	ニップルアッセン	2	INC.7,8
7	NO PART NO.	#	NIPPLE	ニップル	2	
8	03320-00180		O-RING	Oリング	2	
A2	23657-60311		NIPPLE-ASSY	ニップルアッセン	1	INC.9,10
9	NO PART NO.	#	NIPPLE	ニップル	1	
10	03320-00140		O-RING	Oリング	1	
11	234A7-62101		HOSE,RETURN	ホース	1	
-	234A7-62201		HOSE,RETURN	ホース	1	[4SV][5SV]
12	04911-00044		CLIP	クリップ	1	
13	04911-00040		CLIP	クリップ	1	
14	04710-04102		HOSE	ホース	1	
15	04710-04121		HOSE	ホース	1	
16	04911-00021		CLIP	クリップ	6	
17	04710-04030		HOSE	ホース	1	
18	53675-55051		THREE-WAY	スリーウエイ	1	
19	04691-04048		HOSE	ホース	1	
20	04691-02065		HOSE	ホース	1	

FIG.187 HYDRAULIC LINE (MAIN)(2/3)

(F6027660) ﾊｲﾄﾞﾛﾘｯｸﾗｲﾝ(ﾒｲﾝ)(2/3)

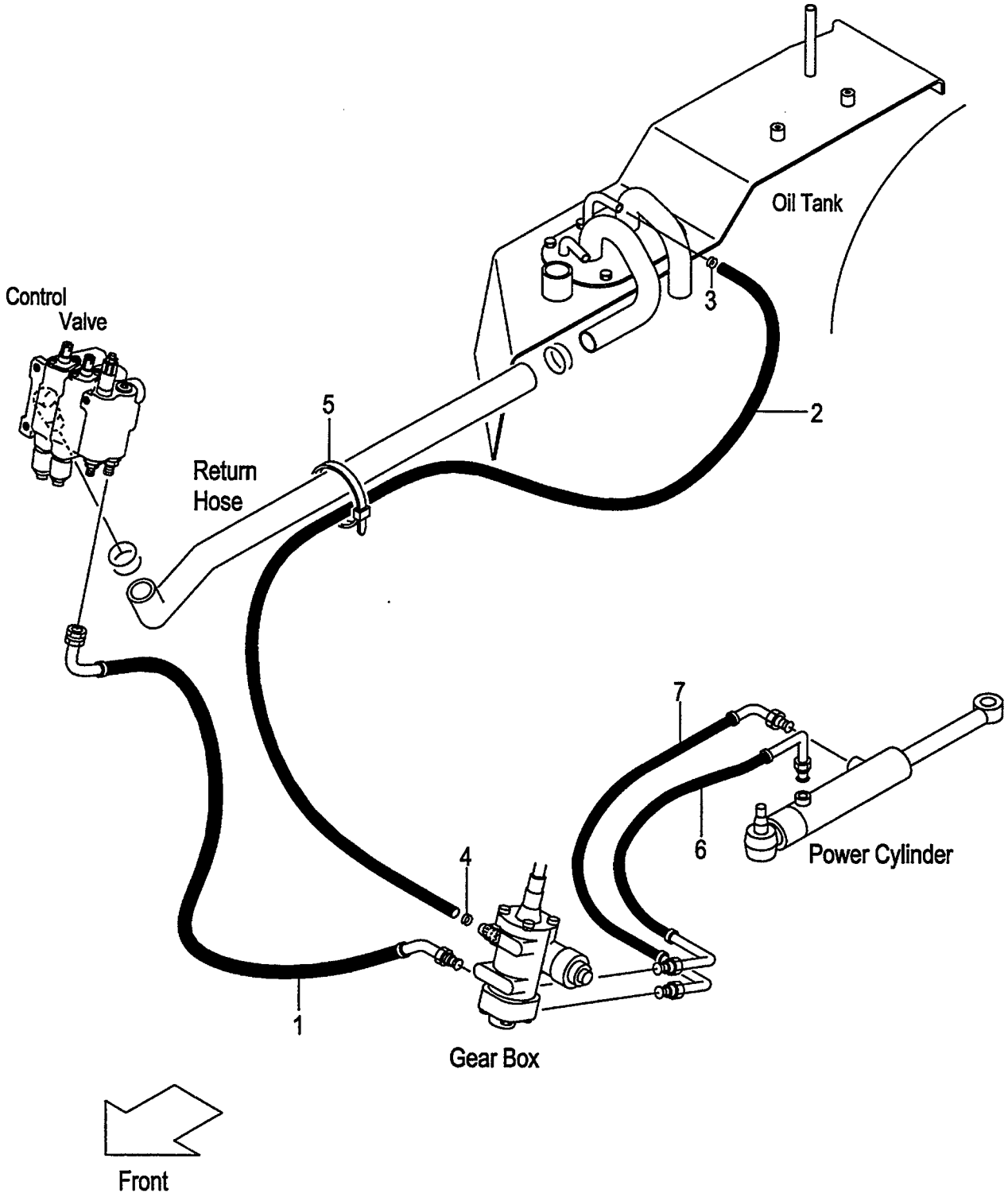

A:FD20C18 FD25C18 D:FD20T7 FD25T7
B:FD20T18 FD25T18 E:FD20W7 FD25W7
C:FD20C7 FD25C7

FIG.187
(F6027660)

Item No	Part No.	Mark	Description		Req'd	Remarks : Serial No.
1	214A7-62131		HOSE	ホース	1	
2	04710-04140		HOSE	ホース	1	
3	04911-00021		CLIP	クリップ	1	
4	04911-00020		CLIP	クリップ	1	
5	27042-42312		BAND,CABLE	バンド	2	
6	239A7-60301		HOSE,PS,FRONT	ホース	1	A,B,C,D
-	239H7-60401		HOSE,PS,FRONT	ホース	1	E
-	239H7-60401		HOSE,PS,FRONT	ホース	1	A,C [PC]
7	239A7-60311		HOSE,PS,REAR	ホース	1	

FIG.188 HYDRAULIC LINE (MAIN)(2/3) [EXC][EXE][EXK][EXN][OBT]

(F60276A0) ﾊｲﾄﾞﾛﾘｯｸﾗｲﾝ(ﾒｲﾝ)(2/3)

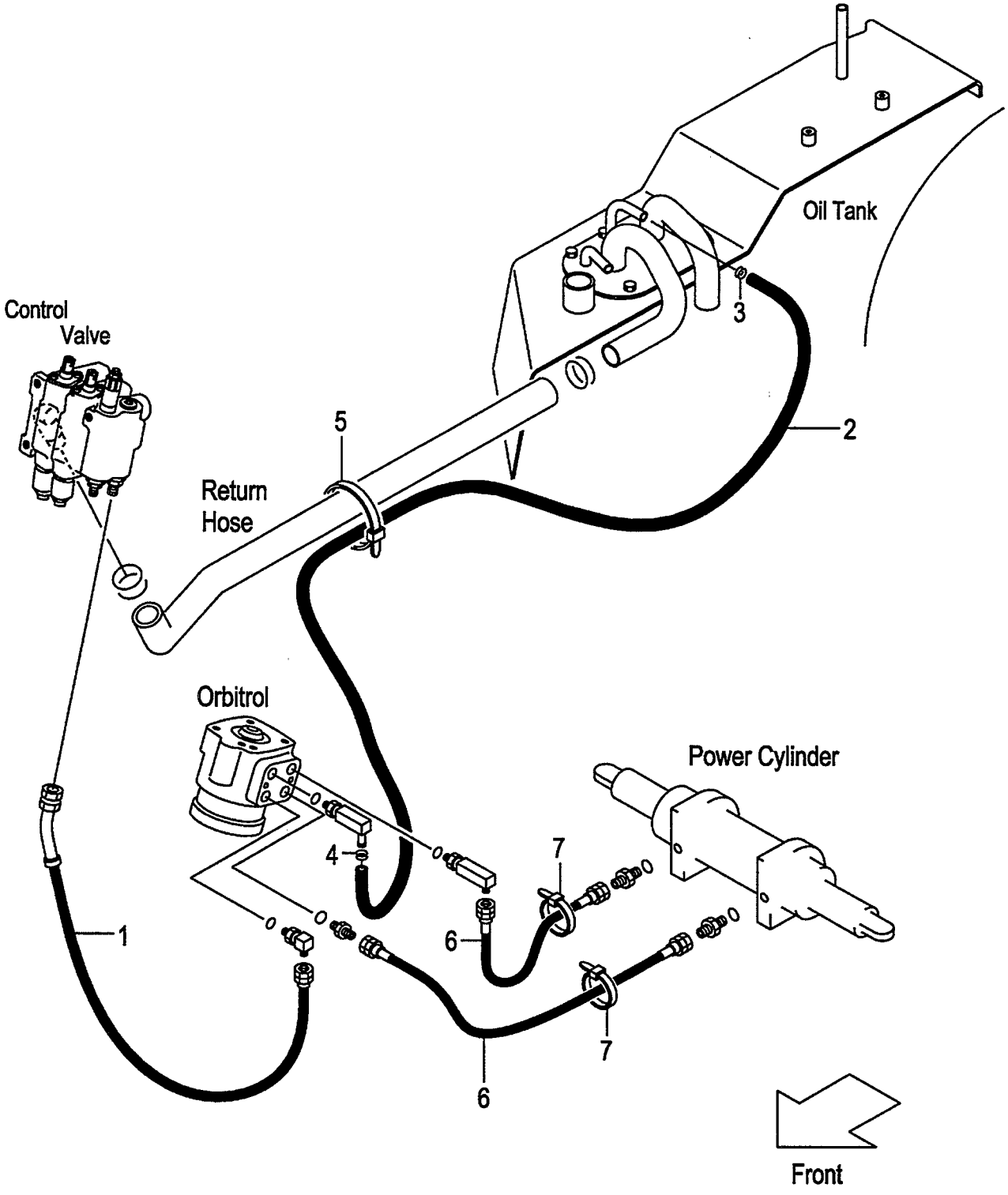

A:FD20C7 FD25C7
B:FD20T7 FD25T7

FIG.188
(F60276A0)

Item No	Part No.	Mark	Description		Req'd	Remarks : Serial No.
1	215E7-62091		HOSE	ホース	1	[EXC][EXE][EXK][EXN][OBT] [EXB/OBT]
2	04710-04165		HOSE	ホース	1	[EXC][EXE][EXK][EXN][OBT] [EXB/OBT]
3	04911-00021		CLIP	ｸﾘｯﾌﾟ	1	[EXC][EXE][EXK][EXN][OBT] [EXB/OBT]
4	04911-00020		CLIP	ｸﾘｯﾌﾟ	1	[EXC][EXE][EXK][EXN][OBT] [EXB/OBT]
5	27042-42312		BAND,CABLE	ﾊﾞﾝﾄﾞ	2	[EXC][EXE][EXK][EXN][OBT] [EXB/OBT]
6	514A2-42512		HOSE,PS	ホース	2	[EXC][EXE][EXK][EXN][OBT] [EXB/OBT]
7	04913-11380		BAND,INSHULOCK	ﾊﾞﾝﾄﾞ	2	[EXC][EXE][EXK][EXN][OBT] [EXB/OBT]

FIG.189 HYDRAULIC LINE (MAIN)(2/3) [(EXC,EXE,EXK,EXN)/PSS]

(F60276B0) ﾊｲﾄﾞﾛﾘｯｸﾗｲﾝ(ﾒｲﾝ)(2/3)

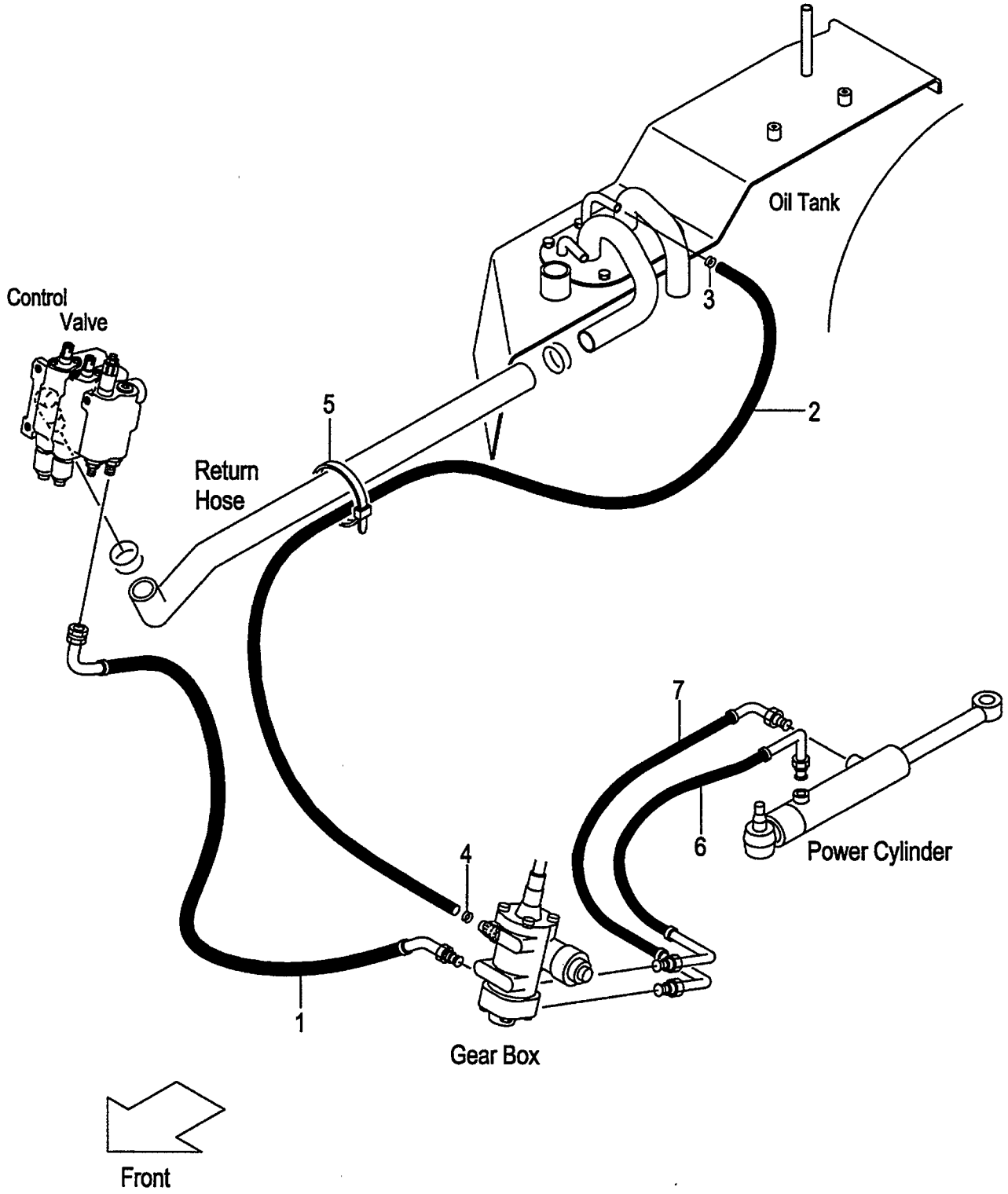

A:FD20C7 FD25C7
B:FD20T7 FD25T7

FIG.189
(F60276B0)

Item No	Part No.	Mark	Description		Req'd	Remarks : Serial No.
1	214A7-62131		HOSE	ホース	1	[EXC/PSS][EXE/PSS][EXK/PSS] [EXN/PSS]
2	04710-04140		HOSE	ホース	1	[EXC/PSS][EXE/PSS][EXK/PSS] [EXN/PSS]
3	04911-00021		CLIP	ｸﾘｯﾌﾟ	1	[EXC/PSS][EXE/PSS][EXK/PSS] [EXN/PSS]
4	04911-00020		CLIP	ｸﾘｯﾌﾟ	1	[EXC/PSS][EXE/PSS][EXK/PSS] [EXN/PSS]
5	27042-42312		BAND,CABLE	ﾊﾞﾝﾄﾞ	2	[EXC/PSS][EXE/PSS][EXK/PSS] [EXN/PSS]
6	239A7-60301		HOSE,PS,FRONT	ホース	1	[EXC/PSS][EXE/PSS][EXK/PSS] [EXN/PSS]
-	239H7-60401		HOSE,PS,FRONT	ホース	1	A [EXC/PSS/PC][EXE/PSS/PC] [EXK/PSS/PC][EXN/PSS/PC]
7	239A7-60311		HOSE,PS,REAR	ホース	1	[EXC/PSS][EXE/PSS][EXK/PSS] [EXN/PSS]

FIG.190 HYDRAULIC LINE (MAIN)(3/3)

(F6027670) ﾊｲﾄﾞﾛﾘｯｸﾗｲﾝ(ﾒｲﾝ)(3/3)

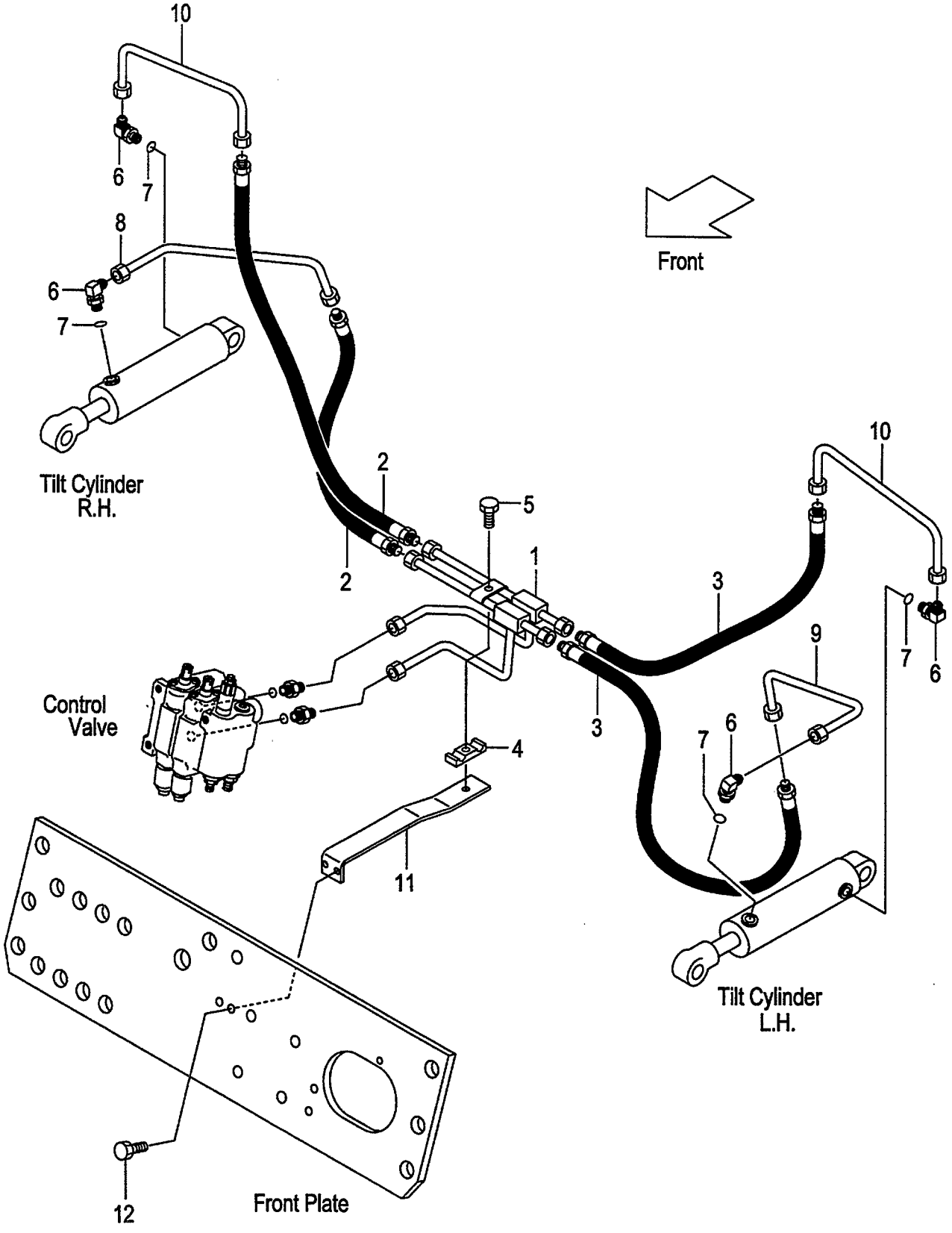

A:FD20C18 FD20T18 FD25C18 FD25T18
B:FD20C7 FD20T7 FD25C7 FD25T7 FD20W7 FD25W7

Item No	Part No.	Mark	Description		Req'd	Remarks : Serial No.
1	239A7-62112		PIPE,TILT	ﾊﾟｲﾌﾟ	1	
2	239A7-62251		HOSE,TILT,RH	ﾎｰｽ	2	
3	239A7-62261		HOSE,TILT,LH	ﾎｰｽ	2	
4	239A7-62351		RUBBER,TILT-PIPE	ﾗﾊﾞｰ	1	
5	01183-08025		BOLT	ﾎﾞﾙﾄ	1	
A1	277H7-60501		ELBOW-ASSY	ｴﾙﾎﾞｱｯｾﾝ	4	INC.6,7
6	NO PART NO.	#	ELBOW	ｴﾙﾎﾞ	4	
7	03320-00110		O-RING	Oﾘﾝｸﾞ	4	
8	239A7-62211		PIPE,RH,TILT-FRONT	ﾊﾟｲﾌﾟ	1	
9	239A7-62121		PIPE,LH,TILT-FRONT	ﾊﾟｲﾌﾟ	1	
10	239A7-62131		PIPE,TILT-REAR	ﾊﾟｲﾌﾟ	2	
11	239A7-62401		BRACKET,TILT-PIPE	ﾌﾞﾗｹｯﾄ	1	
12	01183-08020		BOLT	ﾎﾞﾙﾄ	2	

FIG.191 HYDRAULIC LINE (TOR-CON)

(F6027680) ﾊｲﾄﾞﾛﾘｯｸﾗｲﾝ(ﾄﾙｺﾝ)

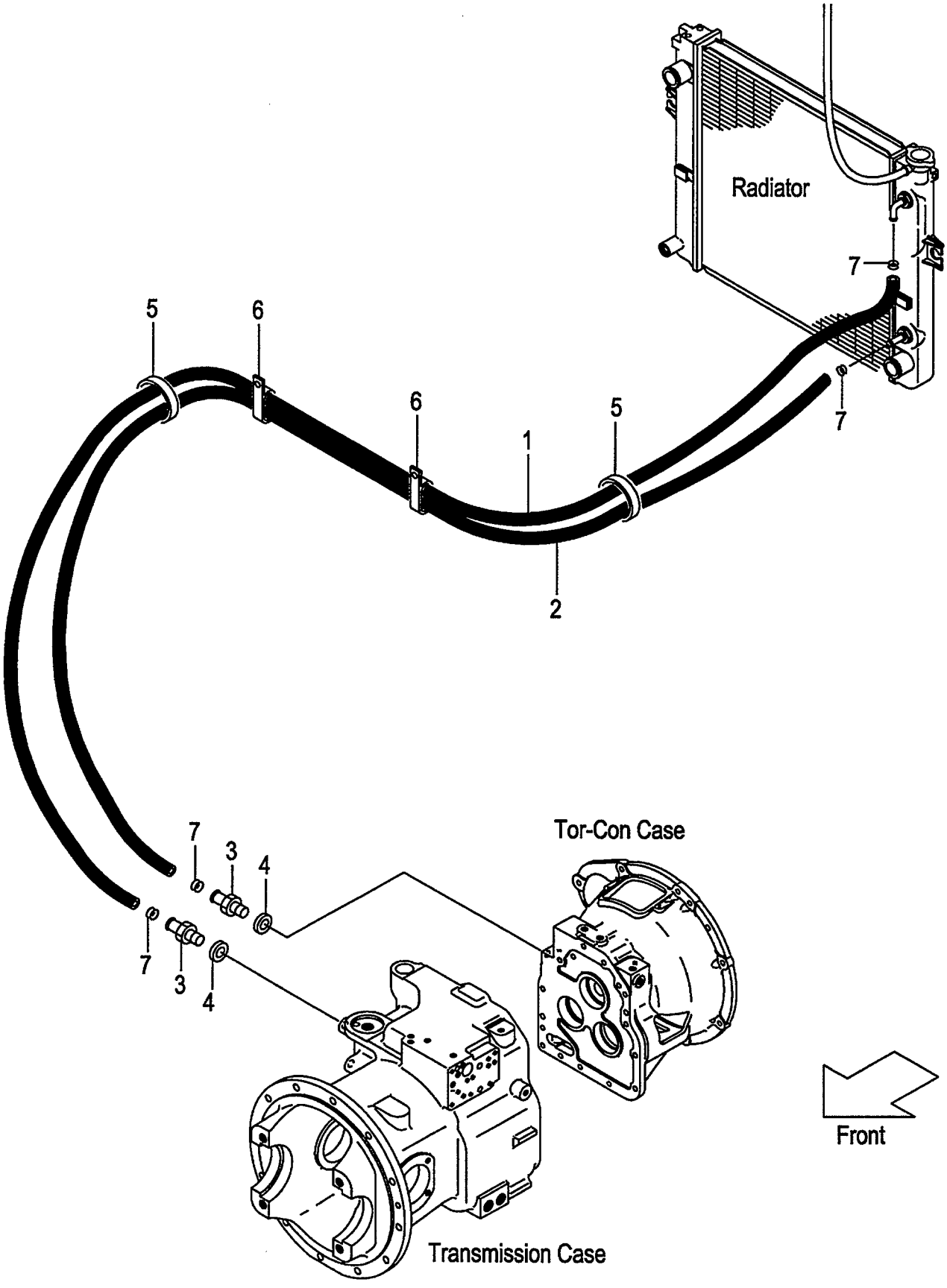

FIG.191
(F6027680)

A:FD20T18 FD25T18

Item No	Part No.	Mark	Description		Req'd	Remarks : Serial No.
1	234B7-82101		HOSE,OIL-COOLER	ﾎｰｽ	1	
2	234B7-82111		HOSE,OIL-COOLER	ﾎｰｽ	1	
3	228U7-62221		NIPPLE	ﾆｯﾌﾟﾙ	2	
4	20802-51301		PACKING	ﾊﾟｯｷﾝｸﾞ	2	
-	23467-82041		PACKING	ﾊﾟｯｷﾝｸﾞ	2	(NO CONTROL NO.)
5	04913-20380		BAND	ﾊﾞﾝﾄﾞ	2	
6	209P7-62531		CLIP	ｸﾘｯﾌﾟ	2	
7	04911-00023		CLIP	ｸﾘｯﾌﾟ	4	

FIG.192 HYDRAULIC LINE (TOR-CON)

(F6027690) ﾊｲﾄﾞﾛﾘｯｸﾗｲﾝ(ﾄﾙｺﾝ)

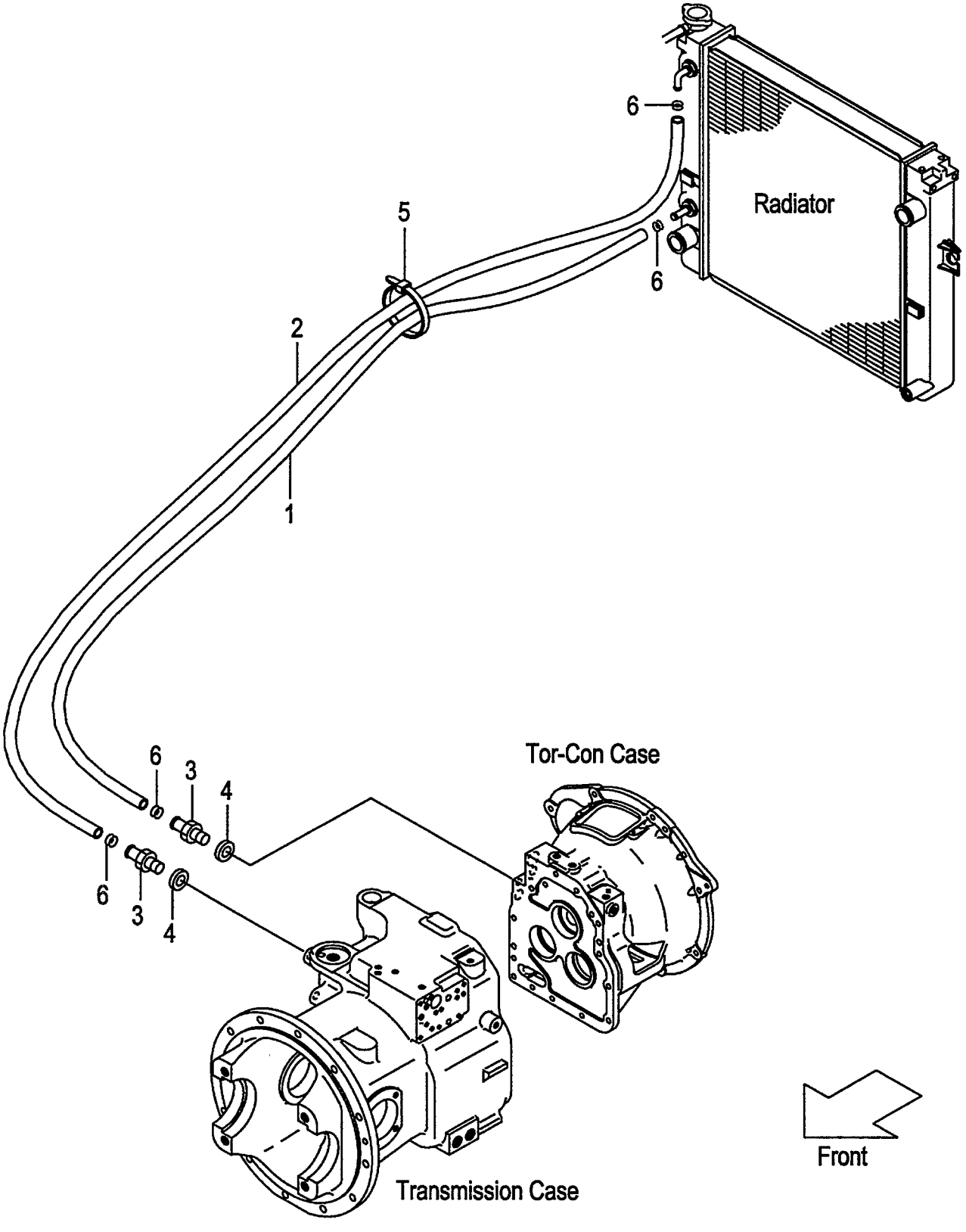

A:FD20T7 FD25T7

Item No	Part No.	Mark	Description		Req'd	Remarks : Serial No.
1	216H7-82111		HOSE,OIL-COOLER	ﾎｰｽ	1	
2	234B7-82111		HOSE,OIL-COOLER	ﾎｰｽ	1	
3	228U7-62221		NIPPLE	ﾆｯﾌﾟﾙ	2	
4	20802-51301		PACKING	ﾊﾟｯｷﾝｸﾞ	2	
-	23467-82041		PACKING	ﾊﾟｯｷﾝｸﾞ	2	(NO CONTROL NO.)
5	04913-20380		BAND	ﾊﾞﾝﾄﾞ	1	
6	25787-82081		CLIP	ｸﾘｯﾌﾟ	4	

FIG.193 HYDRAULIC LINE (OIL CLUTCH)

(F60276D0) ハイドロリックライン(オイルクラッチ)

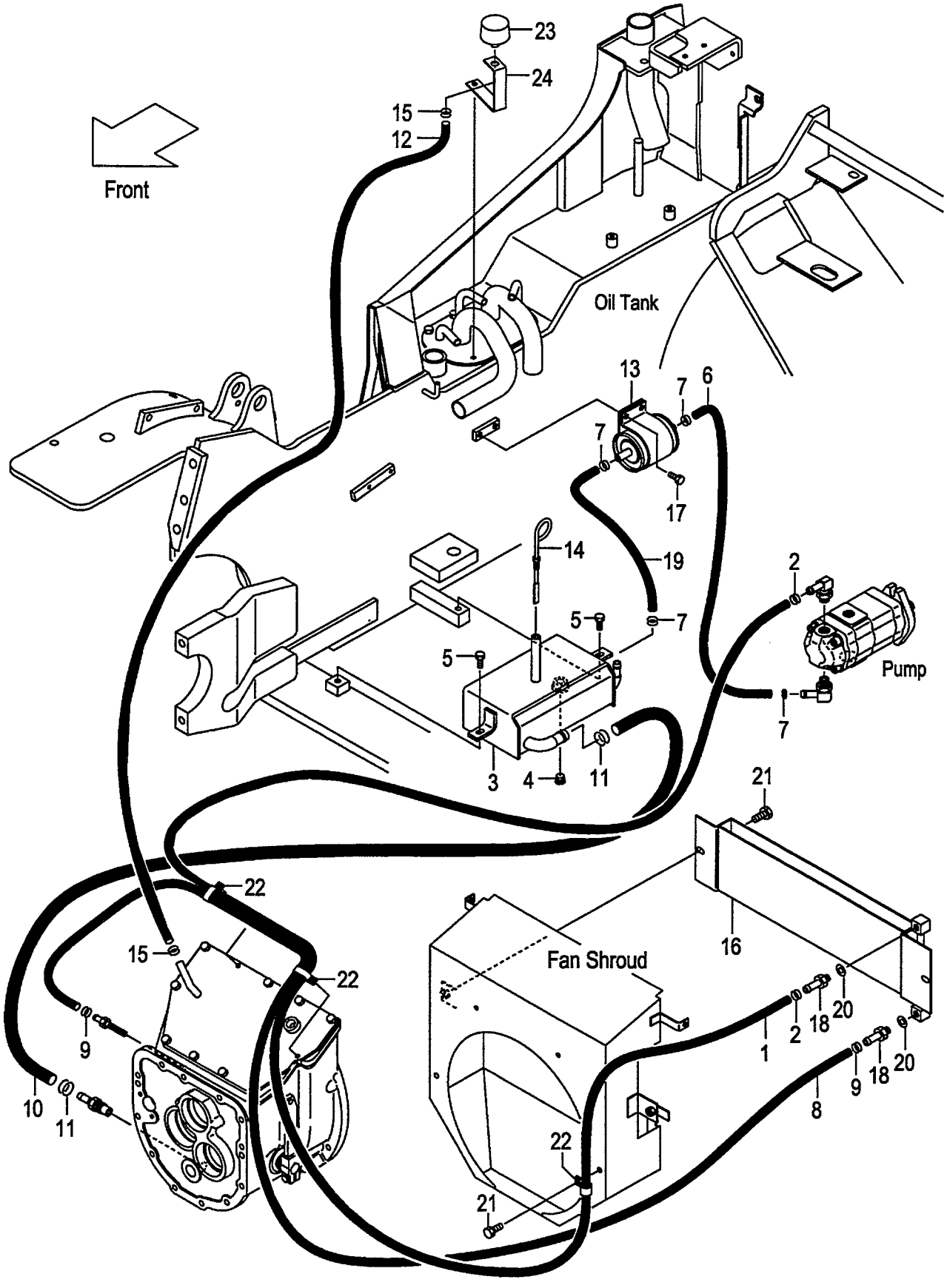

A:FD20W7 FD25W7

Item No	Part No.	Mark	Description		Req'd	Remarks : Serial No.
1	239H7-82001		HOSE,OIL-COOLER	ホース	1	
2	229G7-82051		CLIP,HOSE	クリップ	2	
3	234H7-60104		TANK,OIL	タンク	1	
4	04000-00300		PLUG	プラグ	1	
5	01183-08020		BOLT	ボルト	2	
6	04710-04060		HOSE	ホース	1	
7	04911-00021		CLIP	クリップ	4	
8	229G7-82011		HOSE,OIL-COOLER	ホース	1	
9	229G7-82051		CLIP,HOSE	クリップ	2	
10	234H7-62291		HOSE	ホース	1	
11	04911-00032		CLIP	クリップ	2	
12	04710-04040		HOSE	ホース	1	
13	234H7-62171		FILTER	フイルタ	1	
14	27717-52081		GAUGE,OIL-LEVEL	ゲージ	1	
15	04914-00019		CLIP	クリップ	2	
16	217W2-10001		COOLER,OIL	クーラ	1	
17	01185-08016		BOLT	ボルト	2	
18	229G7-82101		NIPPLE	ニップル	2	
19	04710-04050		HOSE	ホース	1	
20	23467-82041		PACKING	パッキング	2	
21	01186-10016		BOLT	ボルト	3	
22	25957-62201		CLIP	クリップ	3	
23	216G7-52201		CAP,BREATHER	キャップ	1	
24	216G7-52121		BRACKET,AIR-BREATHER	ブラケット	1	

FIG.194 TILT CYLINDER

(F6028510) ﾃｨﾙﾄｼﾘﾝﾀﾞ

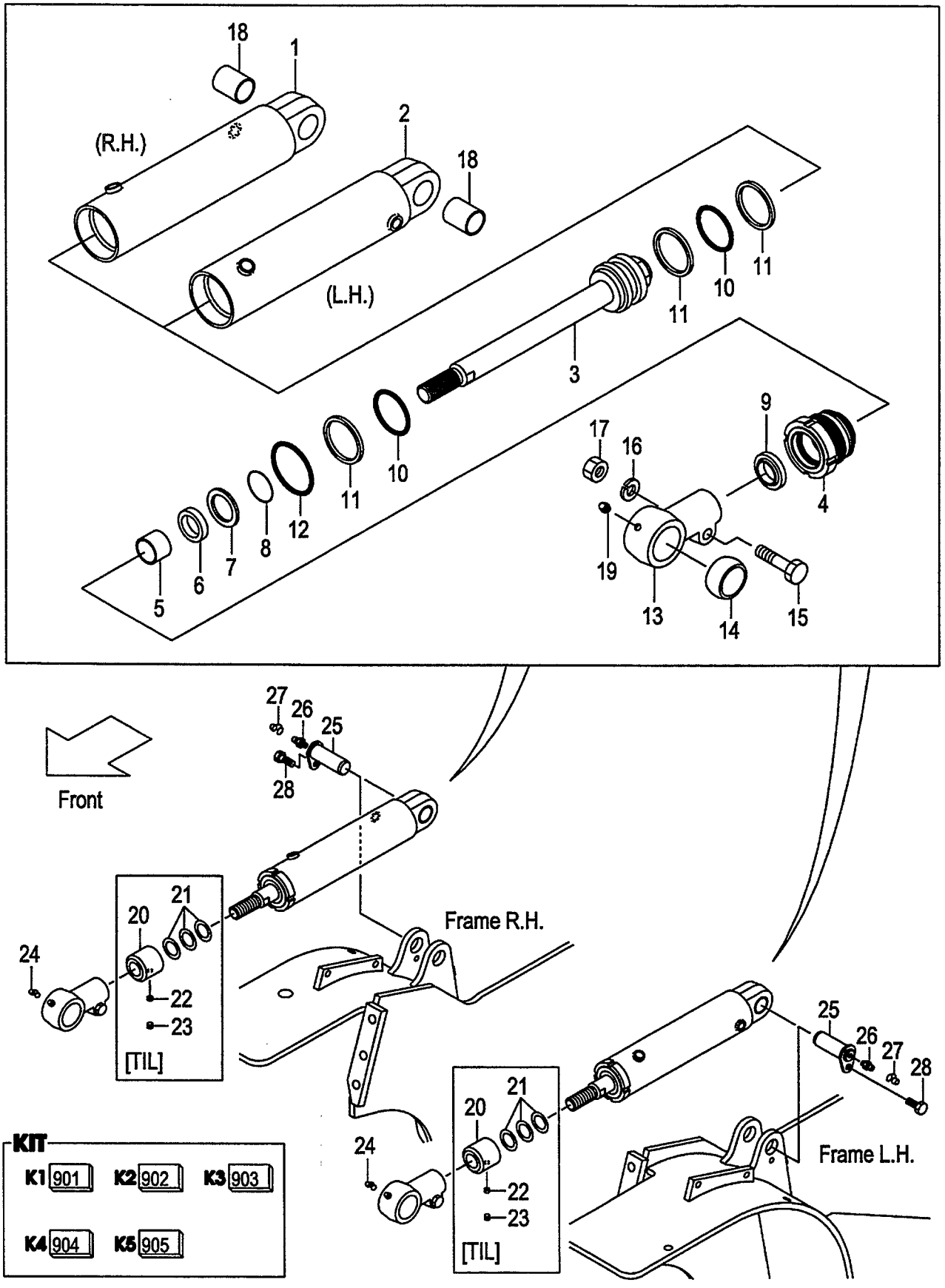

A:FD20C18 FD20T18 FD25C18 FD25T18
B:FD20C7 FD20T7 FD25C7 FD25T7 FD20W7 FD25W7

FIG.194
(F6028510)

Item No	Part No.	Mark	Description		Req'd	Remarks : Serial No.
A1	234A8-50103		CYL-ASSY,TILT,RH	ﾃｨﾙﾄｼﾘﾝﾀﾞｱｯｾﾝ	1	INC.1,3-19
A2	234A8-50113		CYL-ASSY,TILT,LH	ﾃｨﾙﾄｼﾘﾝﾀﾞｱｯｾﾝ	1	INC.2-19
901	B-3070A-00103	K1	KIT,REPAIR	ﾘﾍﾟｱｷｯﾄ	2	INC.6,9-12
902	B-B670B-00086	K2	KIT,CYL-TUBE,RH	ｼﾘﾝﾀﾞﾁｭｰﾌﾞｷｯﾄ	1	INC.1,18
903	B-B670B-00087	K3	KIT,CYL-TUBE,LH	ｼﾘﾝﾀﾞﾁｭｰﾌﾞｷｯﾄ	1	INC.2,18
904	B-3065B-00211	K4	KIT,ROD-HEAD	ﾛｯﾄﾞﾍｯﾄﾞｷｯﾄ	2	INC.13,14
905	B-3070B-00217	K5	KIT,CYL-HEAD	ｼﾘﾝﾀﾞﾍｯﾄﾞｷｯﾄ	2	INC.4,5
1	NO PART NO.	#*	TUBE,CYL,RH	ﾁｭｰﾌﾞ	1	
2	NO PART NO.	#*	TUBE,CYL,LH	ﾁｭｰﾌﾞ	1	
3	B-B6127-20612		ROD,PISTON	ﾛｯﾄﾞ	2	
4	NO PART NO.	#*	HEAD,CYL	ﾍｯﾄﾞ	2	
5	B-96401-30159	*	BUSHING	ﾌﾞｯｼﾝｸﾞ	2	
6	B-30961-03012	*	U-RING	Uﾘﾝｸﾞ	2	
7	B-30151-03006		SPACER	ｽﾍﾟｰｻ	2	
8	B-30141-35012		RING,SNAP	ｽﾅｯﾌﾟﾘﾝｸﾞ	2	
9	B-30191-30025	*	RING,WIPER	ﾘﾝｸﾞ	2	
10	B-95112-06000	*	O-RING	Oﾘﾝｸﾞ	4	
11	B-95713-06000	*	RING,BACK-UP	ﾘﾝｸﾞ	6	
12	B-95121-07000	*	O-RING	Oﾘﾝｸﾞ	2	
13	NO PART NO.	#*	HEAD,ROD	ﾍｯﾄﾞ	2	
14	B-30431-35009	*	BUSHING,PIN	ﾌﾞｯｼﾝｸﾞ	2	
15	B-B6341-01401		BOLT	ﾎﾞﾙﾄ	2	
16	B-30311-01403		WASHER	ﾜｯｼｬ	2	
17	B-B6351-01401		NUT	ﾅｯﾄ	2	
18	B-30421-30005	*	BUSHING,PIN	ﾌﾞｯｼﾝｸﾞ	2	
19	B-96111-10613		NIPPLE,GREASE	ﾆｯﾌﾟﾙ	2	
20	234A8-52162		SPACER,L=156	ｽﾍﾟｰｻ	2	[TIL013](3-3 DEG.)
-	215B8-52022		SPACER,L=129	ｽﾍﾟｰｻ	2	[TIL014][TIL016] (3-6,6-6 DEG.)
-	234A8-52172		SPACER,L=93	ｽﾍﾟｰｻ	2	[TIL017](6-10 DEG.)
21	23658-52101		SHIM	ｼﾑ	6	[TIL013][TIL014] (3-3,3-6 DEG.)
-	23658-52101		SHIM	ｼﾑ	6	[TIL016][TIL017] (6-6,6-10 DEG.)
22	01066-10012		SCREW,SET	ｽｸﾘｭｾｯﾄ	2	[TIL013][TIL014] (3-3,3-6 DEG.)
-	01066-10012		SCREW,SET	ｽｸﾘｭｾｯﾄ	2	[TIL016][TIL017] (6-6,6-10 DEG.)
23	23658-52401		PLUG,NYLON	ﾌﾟﾗｸﾞ	2	[TIL013][TIL014] (3-3,3-6 DEG.)
-	23658-52401		PLUG,NYLON	ﾌﾟﾗｸﾞ	2	[TIL016][TIL017] (6-6,6-10 DEG.)
24	22199-12401		CAP,NIPPLE	ｷｬｯﾌﾟ	2	
25	216G8-52201		PIN	ﾋﾟﾝ	2	
26	04901-00100		FITTING	ﾌｨｯﾃｨﾝｸﾞ	2	
27	22199-12401		CAP,NIPPLE	ｷｬｯﾌﾟ	2	
28	216G8-52301		BOLT & WASHER	ﾎﾞﾙﾄ&ﾜｯｼｬ	2	

FIG.195 TILT BOOT [TLB][FC]

(F6028520) ﾃｨﾙﾄﾌﾞｰﾂ

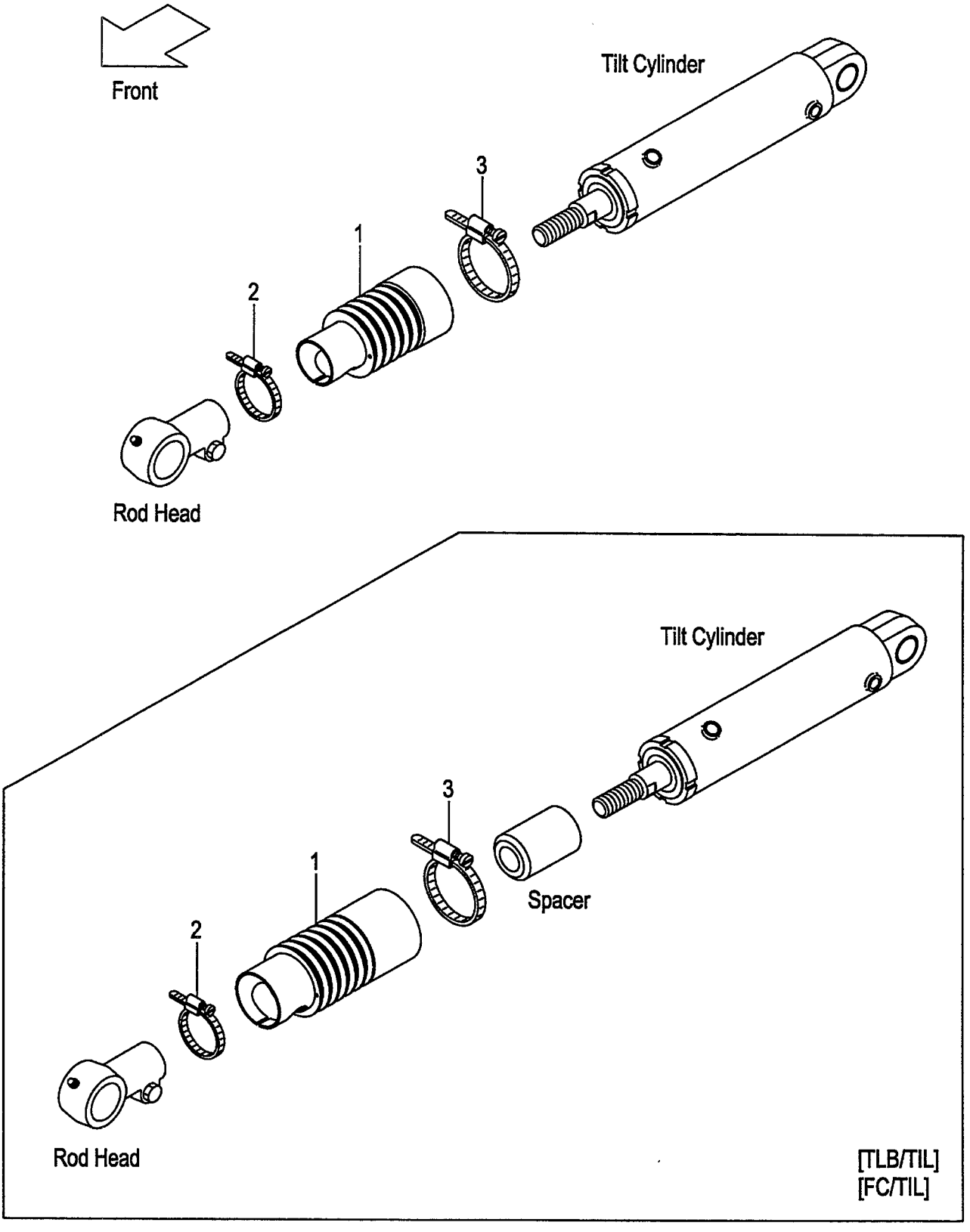

A:FD20C18 FD20T18 FD25C18 FD25T18
B:FD20C7 FD20T7 FD25C7 FD25T7 FD20W7 FD25W7

FIG.195
(F6028520)

Item No	Part No.	Mark	Description		Req'd	Remarks : Serial No.
A1	231A8-51001		BOOT-ASSY,TILT-CYL	ﾌﾞｰﾂｱｯｾﾝ	2	[TLB][FC](6-12 DEG.) INC.1-3
-	231A8-51011		BOOT-ASSY,TILT-CYL	ﾌﾞｰﾂｱｯｾﾝ	2	[TLB/TIL013&014] (3-3,3-6 DEG.) INC.1-3
-	231A8-51011		BOOT-ASSY,TILT-CYL	ﾌﾞｰﾂｱｯｾﾝ	2	[TLB/TIL016&017] (6-6,6-10 DEG.) INC.1-3
-	231A8-51011		BOOT-ASSY,TILT-CYL	ﾌﾞｰﾂｱｯｾﾝ	2	[FC/TIL013&014](3-3,3-6 DEG.) INC.1-3
-	231A8-51011		BOOT-ASSY,TILT-CYL	ﾌﾞｰﾂｱｯｾﾝ	2	[FC/TIL016&017] (6-6,6-10 DEG.) INC.1-3
1	23678-53001		BOOT,TILT-CYL	ﾌﾞｰﾂ	2	[TLB][FC](6-12 DEG.)
-	23678-53101		BOOT,TILT-CYL	ﾌﾞｰﾂ	2	[TLB/TIL013&014] [FC/TIL013&014](3-3,3-6 DEG.)
-	23678-53101		BOOT,TILT-CYL	ﾌﾞｰﾂ	2	[TLB/TIL016&017] [FC/TIL016&017] (6-6,6-10 DEG.)
2	216G8-53001		BAND,50	ﾊﾞﾝﾄﾞ	2	[TLB][FC]
-	216G8-53011		BAND,55	ﾊﾞﾝﾄﾞ	(2)	[TLB][FC]
3	216G8-53051		BAND,90	ﾊﾞﾝﾄﾞ	2	[TLB][FC]
-	224T8-53011		BAND,95	ﾊﾞﾝﾄﾞ	(2)	[TLB][FC]

FIG.196 DECAL (1/2)

(F6029110) デカル(1/2)

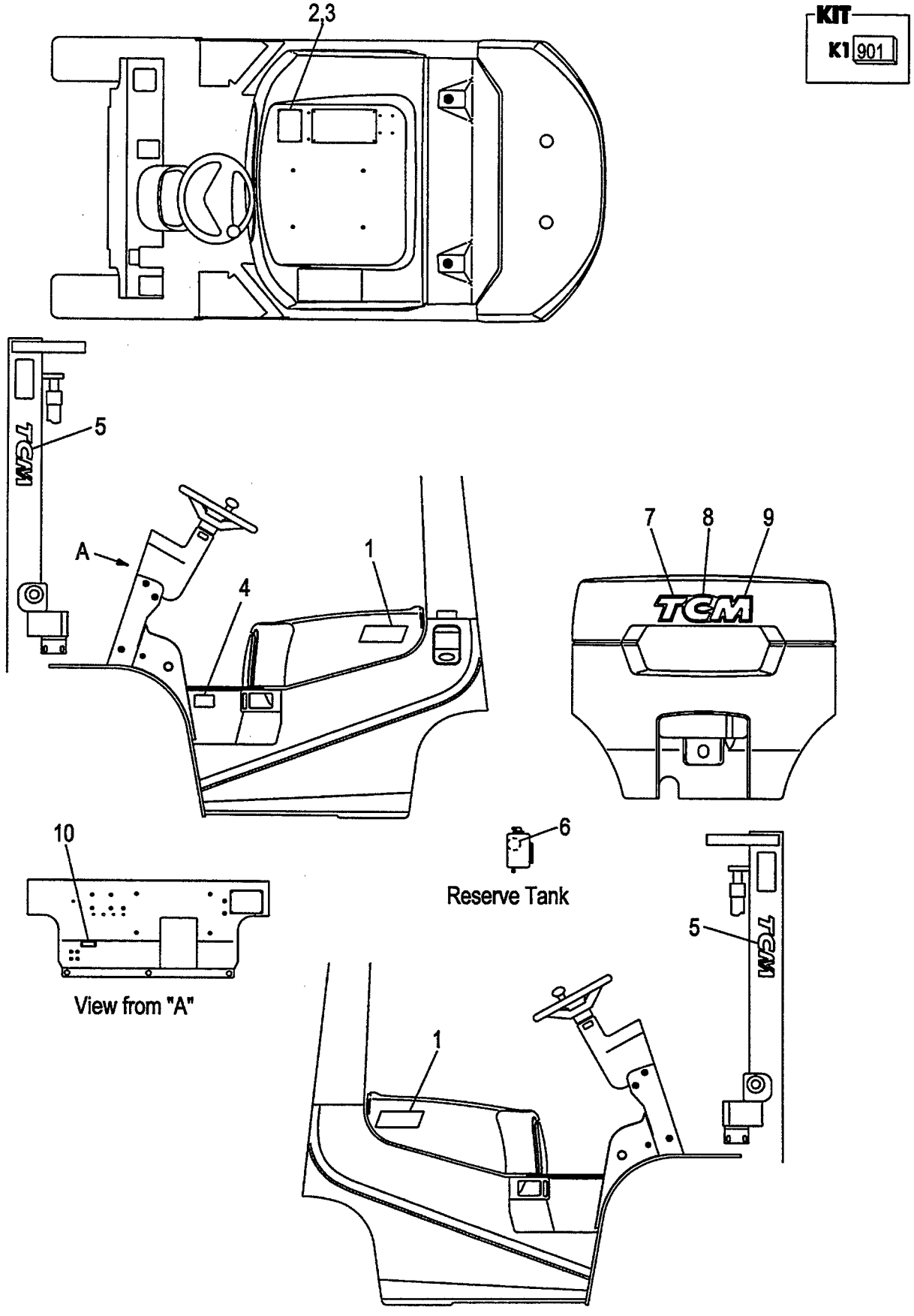

A:FD20C18 FD20T18 D:FD25C7 FD25T7
B:FD25C18 FD25T18 E:FD20W7
C:FD20C7 FD20T7 F:FD25W7

FIG.196
(F6029110)

Item No	Part No.	Mark	Description		Req'd	Remarks : Serial No.
901	236A9-19801	K1	KIT,DECAL	ﾃﾞｶﾙｷｯﾄ	1	INC.4-6 & FIG.197:3-9,12,13
-	236A9-19811	K1	KIT,DECAL	ﾃﾞｶﾙｷｯﾄ	1	C,D [EXB/ENGLISH] INC.4-6 & FIG.198:3-9,16,17
-	236A9-19811	K1	KIT,DECAL	ﾃﾞｶﾙｷｯﾄ	1	C,D [EXC] INC.4-6 & FIG.199:3-9,12,13
-	236A9-19811	K1	KIT,DECAL	ﾃﾞｶﾙｷｯﾄ	1	C,D [EXE/ENGLISH] INC.4-6 & FIG.200:3-9,13,14
-	236A9-19811	K1	KIT,DECAL	ﾃﾞｶﾙｷｯﾄ	1	C,D [EXK] INC.4-6 & FIG.201:3-9,12,13
-	236A9-19811	K1	KIT,DECAL	ﾃﾞｶﾙｷｯﾄ	1	C,D [EXN/ENGLISH] INC.4-6 & FIG.202:3-9,13,14
1	239A9-12001		DECAL,MODEL-MARK,20	ﾃﾞｶﾙ	2	A,C,E
-	239C9-12001		DECAL,MODEL-MARK,25	ﾃﾞｶﾙ	2	B,D,F
-	239A9-12011		DECAL,MODEL-MARK,20	ﾃﾞｶﾙ	2	A,C,E [PCL]
-	239C9-12011		DECAL,MODEL-MARK,25	ﾃﾞｶﾙ	2	B,D,F [PCL]
2	27419-12051		CHART,CAPACITY,2.0T	ﾁｬｰﾄ	1	A,C,E (VM200-500)
-	27419-12101		CHART,CAPACITY,2.0T	ﾁｬｰﾄ	1	A,C,E (VM550-600)
-	27539-12011		CHART,CAPACITY,2.5T	ﾁｬｰﾄ	1	B,D,F (VM200-500)
-	27539-12021		CHART,CAPACITY,2.5T	ﾁｬｰﾄ	1	B,D,F (VM550-600)
-	514A3-82331		CHART,CAPACITY	ﾁｬｰﾄ	1	C,D [EXB/SPANISH][EXE/SPANISH]
-	514A3-82341		CHART,CAPACITY	ﾁｬｰﾄ	1	C,D [EXB/FRENCH][EXE/FRENCH]
-	522A2-82061		CHART,CAPACITY,2.0T	ﾁｬｰﾄ	1	C [EXB/CHINESE](VM200-500)
-	522A2-82111		CHART,CAPACITY,2.0T	ﾁｬｰﾄ	1	C [EXB/CHINESE](VM550-600)
-	522E2-82061		CHART,CAPACITY,2.5T	ﾁｬｰﾄ	1	D [EXB/CHINESE](VM200-500)
-	522E2-82111		CHART,CAPACITY,2.5T	ﾁｬｰﾄ	1	D [EXB/CHINESE](VM550-600)
-	225R9-12011		CHART,CAPACITY,2.0T	ﾁｬｰﾄ	1	C [EXB/RUSSIA](VM200-500)
-	225R9-12021		CHART,CAPACITY,2.0T	ﾁｬｰﾄ	1	C [EXB/RUSSIA](VM550-600)
-	225S9-12001		CHART,CAPACITY,2.5T	ﾁｬｰﾄ	1	D [EXB/RUSSIA](VM200-500)
-	225S9-12011		CHART,CAPACITY,2.5T	ﾁｬｰﾄ	1	D [EXB/RUSSIA](VM550-600)

FIG.196 DECAL (1/2)

(F6029110) デカル(1/2)

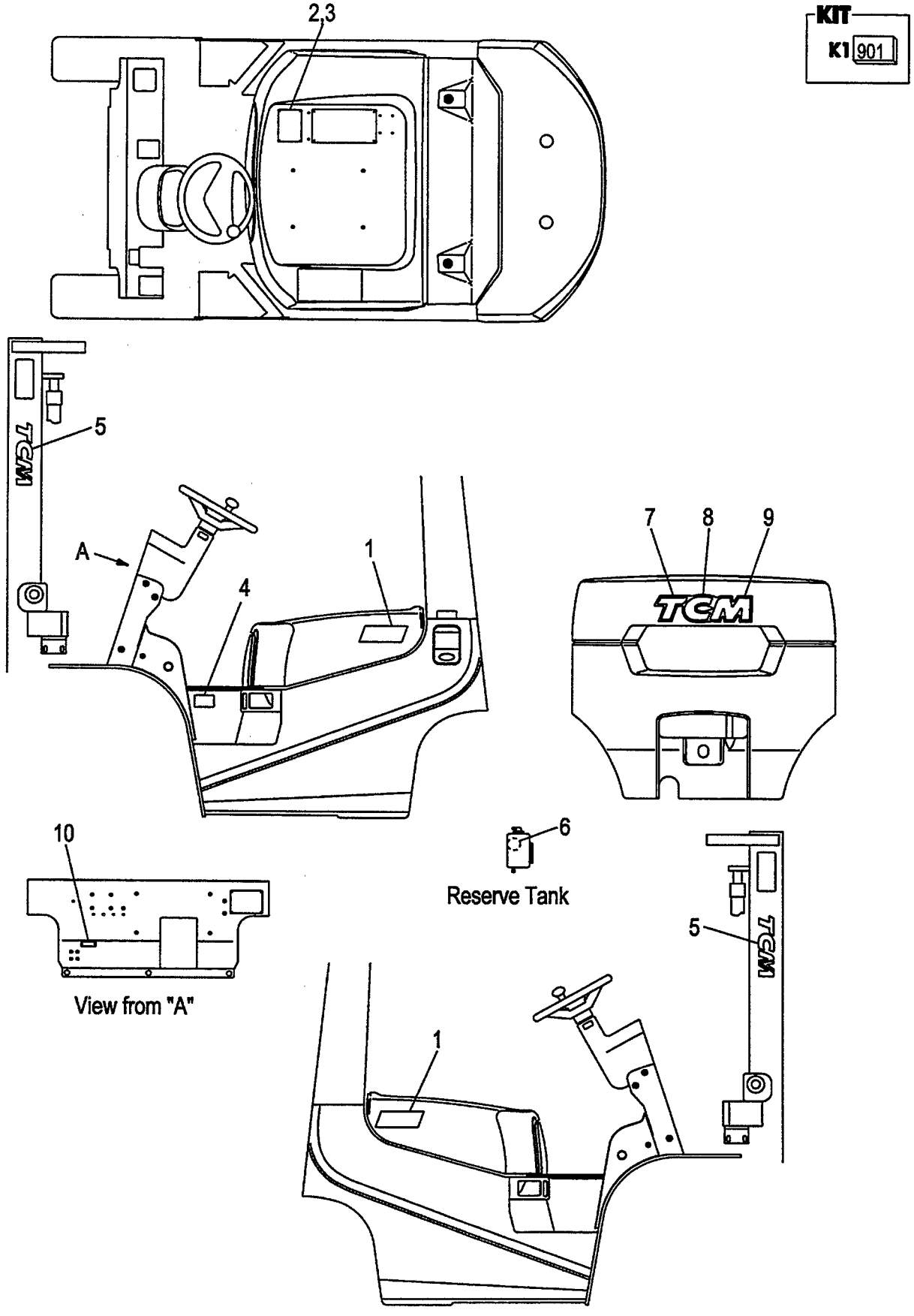

A:FD20C18 FD20T18 D:FD25C7 FD25T7
B:FD25C18 FD25T18 E:FD20W7
C:FD20C7 FD20T7 F:FD25W7

FIG.196
(F6029110)

Item No	Part No.	Mark	Description		Req'd	Remarks : Serial No.
-	514A2-92011		CHART,CAPACITY,2.0T	ﾁｬｰﾄ	1	C [EXC]
-	514E2-92001		CHART,CAPACITY,2.5T	ﾁｬｰﾄ	1	D [EXC]
-	514A3-82301		CHART,CAPACITY	ﾁｬｰﾄ	1	C,D [EXE/ENGLISH][EXN/ENGLISH]
-	514A3-82321		CHART,CAPACITY	ﾁｬｰﾄ	1	C,D [EXE/GERMAN]
-	514A3-82351		CHART,CAPACITY	ﾁｬｰﾄ	1	C,D [EXE/DUTCH]
-	514A3-82361		CHART,CAPACITY	ﾁｬｰﾄ	1	C,D [EXE/DANISH][EXN/DANISH]
-	514A3-82371		CHART,CAPACITY	ﾁｬｰﾄ	1	C,D [EXE/ITALIAN]
-	514A3-82381		CHART,CAPACITY	ﾁｬｰﾄ	1	C,D [EXE/GREEK]
-	514A3-82391		CHART,CAPACITY	ﾁｬｰﾄ	1	C,D [EXE/PORTUGUESE]
-	529F3-82111		CHART,CAPACITY	ﾁｬｰﾄ	1	C,D [EXN/SWEDISH]
-	529F3-82101		CHART,CAPACITY	ﾁｬｰﾄ	1	C,D [EXN/FINNISH]
3	02432-01008		RIVET	ﾘﾍﾞｯﾄ	4	
4	27049-12172	*	DECAL,AIR-PRESSURE	ﾃﾞｶﾙ	1	
-	225R9-12142		DECAL,AIR-PRESSURE	ﾃﾞｶﾙ	1	C,D [EXB/RUSSIA]
5	273A9-12242	*	DECAL,TCM	ﾃﾞｶﾙ	2	
6	23659-12101	*	DECAL,L/LIFE-COOLANT	ﾃﾞｶﾙ	1	
-	522A3-82641		DECAL,L/LIFE-COOLANT	ﾃﾞｶﾙ	1	C,D [EXB/SPANISH][EXE/SPANISH]
-	522A3-82841		DECAL,L/LIFE-COOLANT	ﾃﾞｶﾙ	1	C,D [EXB/FRENCH][EXE/FRENCH]
-	232W9-12051		DECAL,L/LIFE-COOLANT	ﾃﾞｶﾙ	1	C,D [EXB/RUSSIA]
-	522A3-82441		DECAL,L/LIFE-COOLANT	ﾃﾞｶﾙ	1	C,D [EXE/GERMAN]
-	522A3-83041		DECAL,L/LIFE-COOLANT	ﾃﾞｶﾙ	1	C,D [EXE/DUTCH]
-	522A3-83241		DECAL,L/LIFE-COOLANT	ﾃﾞｶﾙ	1	C,D [EXE/DANISH][EXN/DANISH]
-	522A3-83441		DECAL,L/LIFE-COOLANT	ﾃﾞｶﾙ	1	C,D [EXE/ITALIAN]
-	522A3-83641		DECAL,L/LIFE-COOLANT	ﾃﾞｶﾙ	1	C,D [EXE/GREEK]
-	522A3-83841		DECAL,L/LIFE-COOLANT	ﾃﾞｶﾙ	1	C,D [EXE/PORTUGUESE]
-	529F3-82091		DECAL,L/LIFE-COOLANT	ﾃﾞｶﾙ	1	C,D [EXN/SWEDISH]
-	529F3-82081		DECAL,L/LIFE-COOLANT	ﾃﾞｶﾙ	1	C,D [EXN/FINNISH]

FIG.196 DECAL (1/2)

(F6029110) デカル(1/2)

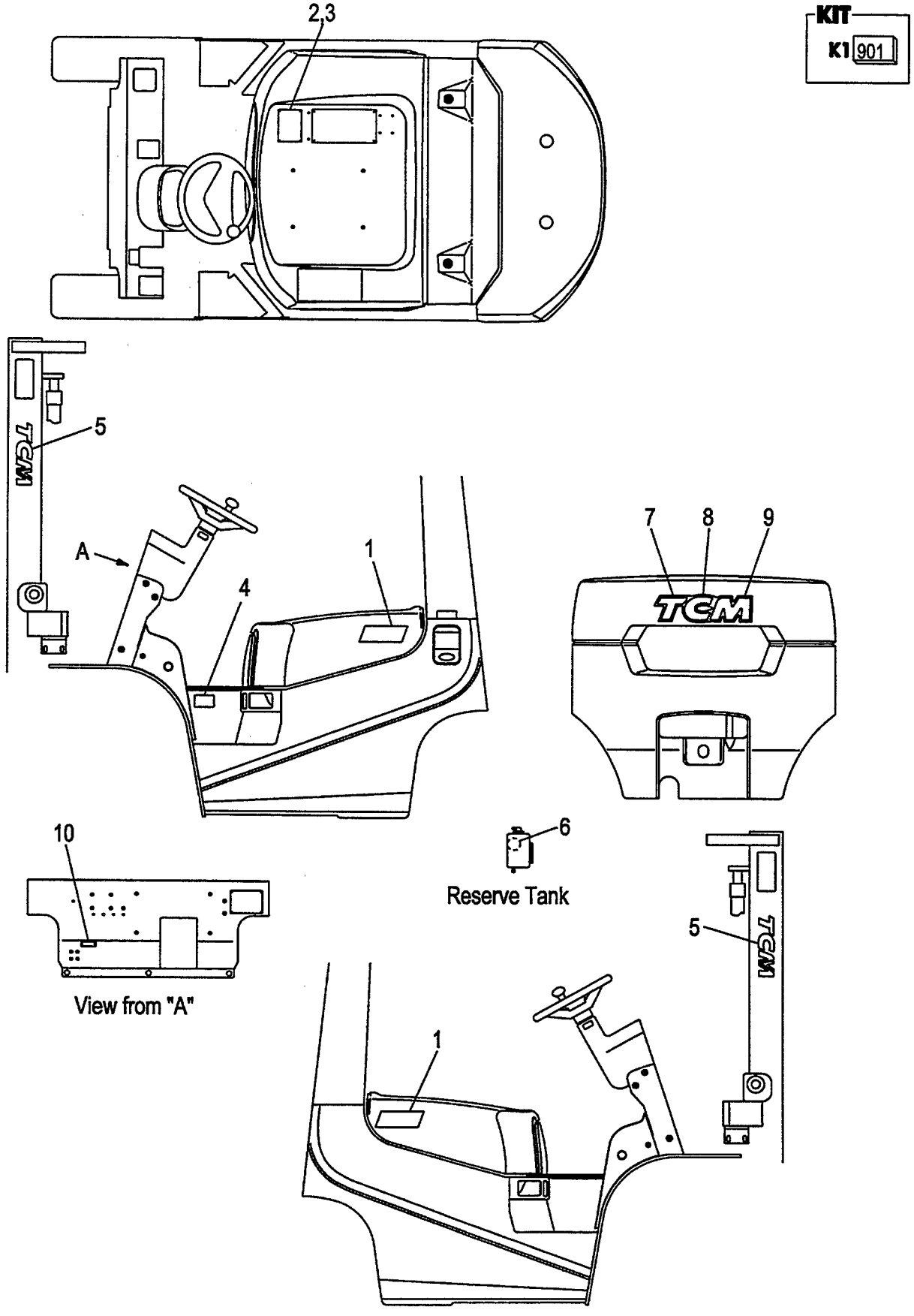

A:FD20C18 FD20T18 D:FD25C7 FD25T7
B:FD25C18 FD25T18 E:FD20W7
C:FD20C7 FD20T7 F:FD25W7

FIG.196
(F6029110)

Item No	Part No.	Mark	Description	Req'd	Remarks : Serial No.
7	216G9-12013		DECAL,B/WEIGHT,T デカル	1	
8	216G9-12023		DECAL,B/WEIGHT,C デカル	1	
9	216G9-12033		DECAL,B/WEIGHT,M デカル	1	
10	238A9-92101		PLATE,LICENCE プレート	1	A,B

FIG.197 DECAL (2/2)

(F6029120) ﾃﾞｶﾙ(2/2)

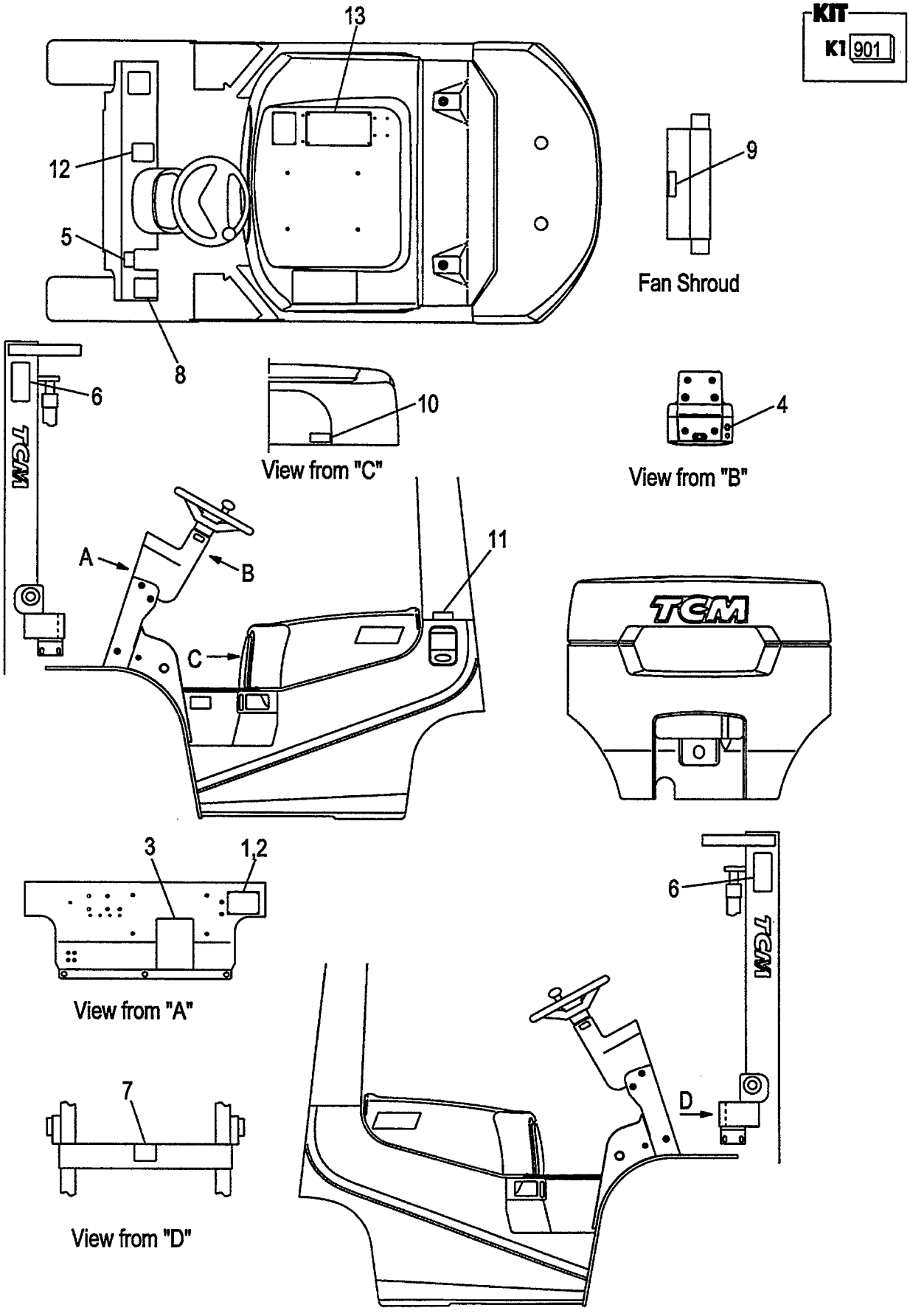

A:FD20C18 FD20T18 FD25C18 FD25T18
B:FD20C7 FD20T7 FD25C7 FD25T7 FD20W7 FD25W7

FIG.197
(F6029120)

Item No	Part No.	Mark	Description		Req'd	Remarks : Serial No.
901	236A9-19801	K1	KIT,DECAL	ﾃﾞｶﾙｷｯﾄ	1	INC.3-9,12,13 & FIG.196:4-6
1	NO PART NO.	#	PLATE,NAME	ﾌﾟﾚｰﾄ	1	
2	216G9-12131		RIVET	ﾘﾍﾞｯﾄ	4	
3	25789-12051	*	DECAL,LUBRICATION	ﾃﾞｶﾙ	1	
4	216G9-12071	*	DECAL,STARTER-SWITCH	ﾃﾞｶﾙ	1	
5	214A5-53012	*	DECAL,BRAKE-LEVER	ﾃﾞｶﾙ	1	
6	27419-12062	*	DECAL,MAST-CAUTION	ﾃﾞｶﾙ	2	
7	27419-12072	*	DECAL,CROSS-BEAM	ﾃﾞｶﾙ	1	
8	216G9-12062	*	DECAL,TIRE-CAUTION	ﾃﾞｶﾙ	1	
9	216G9-12052	*	DECAL,FAN-CAUTION	ﾃﾞｶﾙ	1	
10	238F9-12071		DECAL,FUEL-CAPACITY	ﾃﾞｶﾙ	1	
11	21159-12501		DECAL,LIGHT-OIL	ﾃﾞｶﾙ	1	
12	271A9-12251	*	DECAL,CAUTION	ﾃﾞｶﾙ	1	
13	239A9-12301	*	DECAL,WARNING-PLATE	ﾃﾞｶﾙ	1	

FIG.198 DECAL (2/2)[EXB]

(F60291B0) ﾃﾞｶﾙ(2/2)

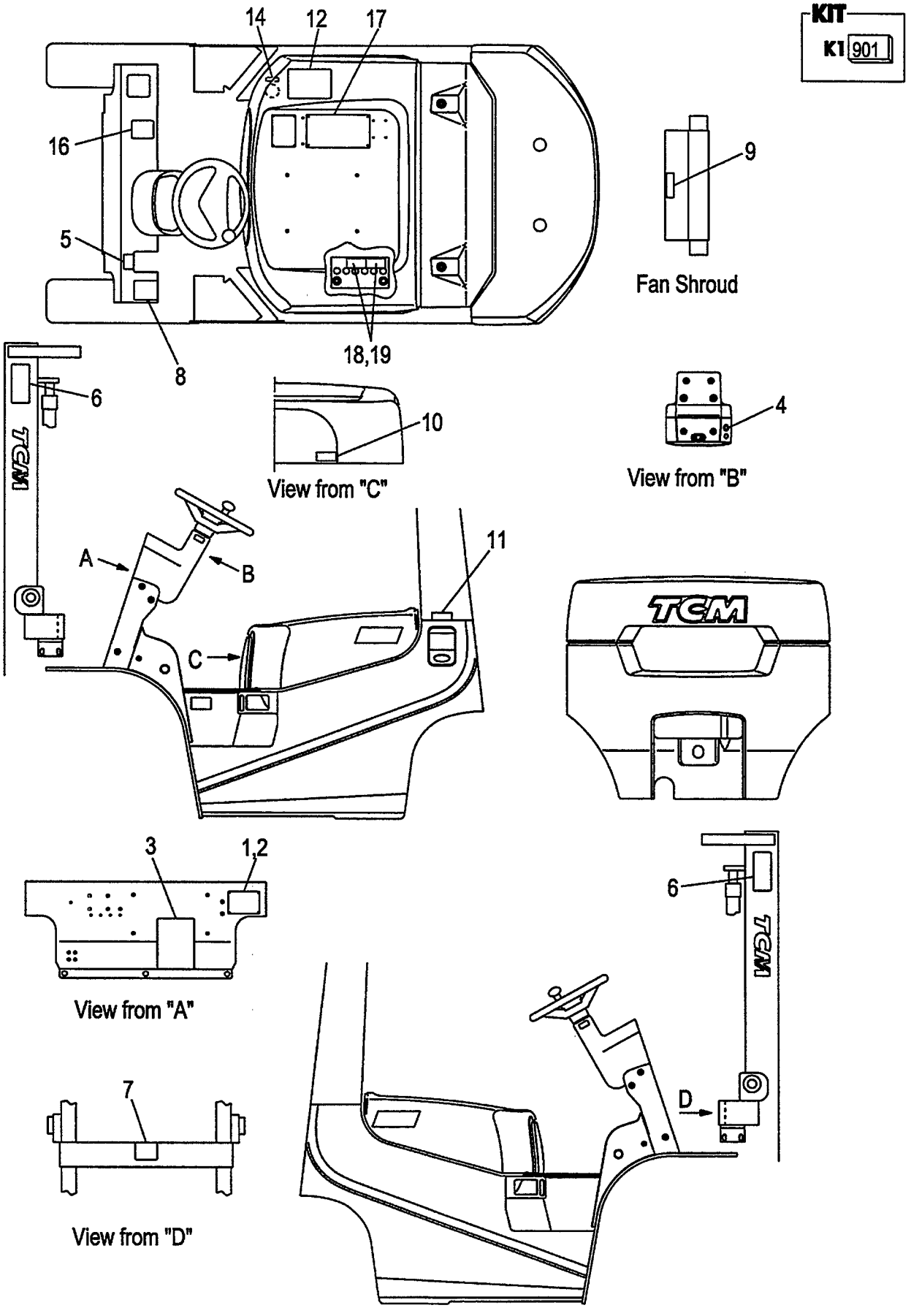

A:FD20C7 FD25C7
B:FD20T7 FD25T7

FIG.198
(F60291B0)

Item No	Part No.	Mark	Description		Req'd	Remarks : Serial No.
901	236A9-19811	K1	KIT,DECAL	ﾃﾞｶﾙｷｯﾄ	1	[EXB/ENGLISH]
						INC.3-9,16,17 & FIG.196:4-6
1	NO PART NO.	#	PLATE,NAME	ﾌﾟﾚｰﾄ	1	[EXB/ENGLISH]
-	NO PART NO.	#	PLATE,NAME	ﾌﾟﾚｰﾄ	1	[EXB/SPANISH]
-	NO PART NO.	#	PLATE,NAME	ﾌﾟﾚｰﾄ	1	[EXB/FRENCH]
-	NO PART NO.	#	PLATE,NAME	ﾌﾟﾚｰﾄ	1	[EXB/CHINESE]
-	NO PART NO.	#	PLATE,NAME	ﾌﾟﾚｰﾄ	1	[EXB/RUSSIA]
2	216G9-12131		RIVET	ﾘﾍﾞｯﾄ	4	[EXB]
3	52672-72122	*	CHART,LUBRICATION	ﾁｬｰﾄ	1	[EXB/ENGLISH]
-	53652-82352		CHART,LUBRICATION	ﾁｬｰﾄ	1	[EXB/SPANISH]
-	22959-12052		CHART,LUBRICATION	ﾁｬｰﾄ	1	[EXB/FRENCH]
-	52672-82062		CHART,LUBRICATION	ﾁｬｰﾄ	1	[EXB/CHINESE]
-	225R9-12031		CHART,LUBRICATION	ﾁｬｰﾄ	1	[EXB/RUSSIA]
4	216G9-12071	*	DECAL,STARTER-SWITCH	ﾃﾞｶﾙ	1	[EXB]
-	516G3-82011		DECAL,STARTER-SWITCH	ﾃﾞｶﾙ	1	[EXB/SPANISH]
-	232W9-12001		DECAL,STARTER-SWITCH	ﾃﾞｶﾙ	1	[EXB/RUSSIA]
5	514A3-82002	*	DECAL,BRAKE-LEVER	ﾃﾞｶﾙ	1	[EXB/ENGLISH]
-	514A3-82012		DECAL,BRAKE-LEVER	ﾃﾞｶﾙ	1	[EXB/SPANISH]
-	514A3-82022		DECAL,BRAKE-LEVER	ﾃﾞｶﾙ	1	[EXB/FRENCH]
-	514A2-82012		DECAL,BRAKE-LEVER	ﾃﾞｶﾙ	1	[EXB/CHINESE]
-	225R9-12112		DECAL,BRAKE-LEVER	ﾃﾞｶﾙ	1	[EXB/RUSSIA]
6	27419-12061	*	DECAL,MAST-CAUTION	ﾃﾞｶﾙ	2	[EXB]
-	27419-12062		DECAL,MAST-CAUTION	ﾃﾞｶﾙ	2	[EXB/RUSSIA]
7	27419-12071	*	DECAL,CROSS-BEAM	ﾃﾞｶﾙ	1	[EXB]
-	27419-12072		DECAL,CROSS-BEAM	ﾃﾞｶﾙ	1	[EXB/RUSSIA]
8	516G2-72711	*	DECAL,TIRE-CAUTION	ﾃﾞｶﾙ	1	[EXB/ENGLISH]
-	516G3-82211		DECAL,TIRE-CAUTION	ﾃﾞｶﾙ	1	[EXB/SPANISH]
-	516G3-82221		DECAL,TIRE-CAUTION	ﾃﾞｶﾙ	1	[EXB/FRENCH]
-	516G2-82061		DECAL,TIRE-CAUTION	ﾃﾞｶﾙ	1	[EXB/CHINESE]
-	232W9-12021		DECAL,TIRE-CAUTION	ﾃﾞｶﾙ	1	[EXB/RUSSIA]
9	516G2-72701	*	DECAL,FAN-CAUTION	ﾃﾞｶﾙ	1	[EXB/ENGLISH]
-	516G3-82111		DECAL,FAN-CAUTION	ﾃﾞｶﾙ	1	[EXB/SPANISH]
-	516G3-82121		DECAL,FAN-CAUTION	ﾃﾞｶﾙ	1	[EXB/FRENCH]
-	516G2-82051		DECAL,FAN-CAUTION	ﾃﾞｶﾙ	1	[EXB/CHINESE]
-	232W9-12011		DECAL,FAN-CAUTION	ﾃﾞｶﾙ	1	[EXB/RUSSIA]
10	536G2-82181		DECAL,FUEL-CAPACITY	ﾃﾞｶﾙ	1	[EXB/ENGLISH]
-	536G3-82001		DECAL,FUEL-CAPACITY	ﾃﾞｶﾙ	1	[EXB/SPANISH]
-	536G3-82011		DECAL,FUEL-CAPACITY	ﾃﾞｶﾙ	1	[EXB/FRENCH]
-	536G2-82281		DECAL,FUEL-CAPACITY	ﾃﾞｶﾙ	1	[EXB/CHINESE]
-	239T9-12071		DECAL,FUEL-CAPACITY	ﾃﾞｶﾙ	1	[EXB/RUSSIA]
11	522A2-72111		DECAL,LIGHT-OIL	ﾃﾞｶﾙ	1	[EXB/ENGLISH]
-	51152-82022		DECAL,LIGHT-OIL	ﾃﾞｶﾙ	1	[EXB/SPANISH]
-	51152-82012		DECAL,LIGHT-OIL	ﾃﾞｶﾙ	1	[EXB/FRENCH]
-	522A2-82151		DECAL,LIGHT-OIL	ﾃﾞｶﾙ	1	[EXB/CHINESE]
-	225R9-12001		DECAL,LIGHT-OIL	ﾃﾞｶﾙ	1	[EXB/RUSSIA]
12	53652-82551		DECAL,CAUTION	ﾃﾞｶﾙ	1	[EXB/CHINESE]
13	225R9-12091	+	DECAL,BATTERY-SWITCH	ﾃﾞｶﾙ	1	[EXB/RUSSIA]
14	53652-82401		DECAL,OIL	ﾃﾞｶﾙ	1	[EXB/SPANISH]
-	53652-82011		DECAL,OIL	ﾃﾞｶﾙ	1	[EXB/FRENCH]
-	53652-82541		DECAL,OIL	ﾃﾞｶﾙ	1	[EXB/CHINESE]

FIG.198 DECAL (2/2)[EXB]

(F60291B0) ﾃﾞｶﾙ(2/2)

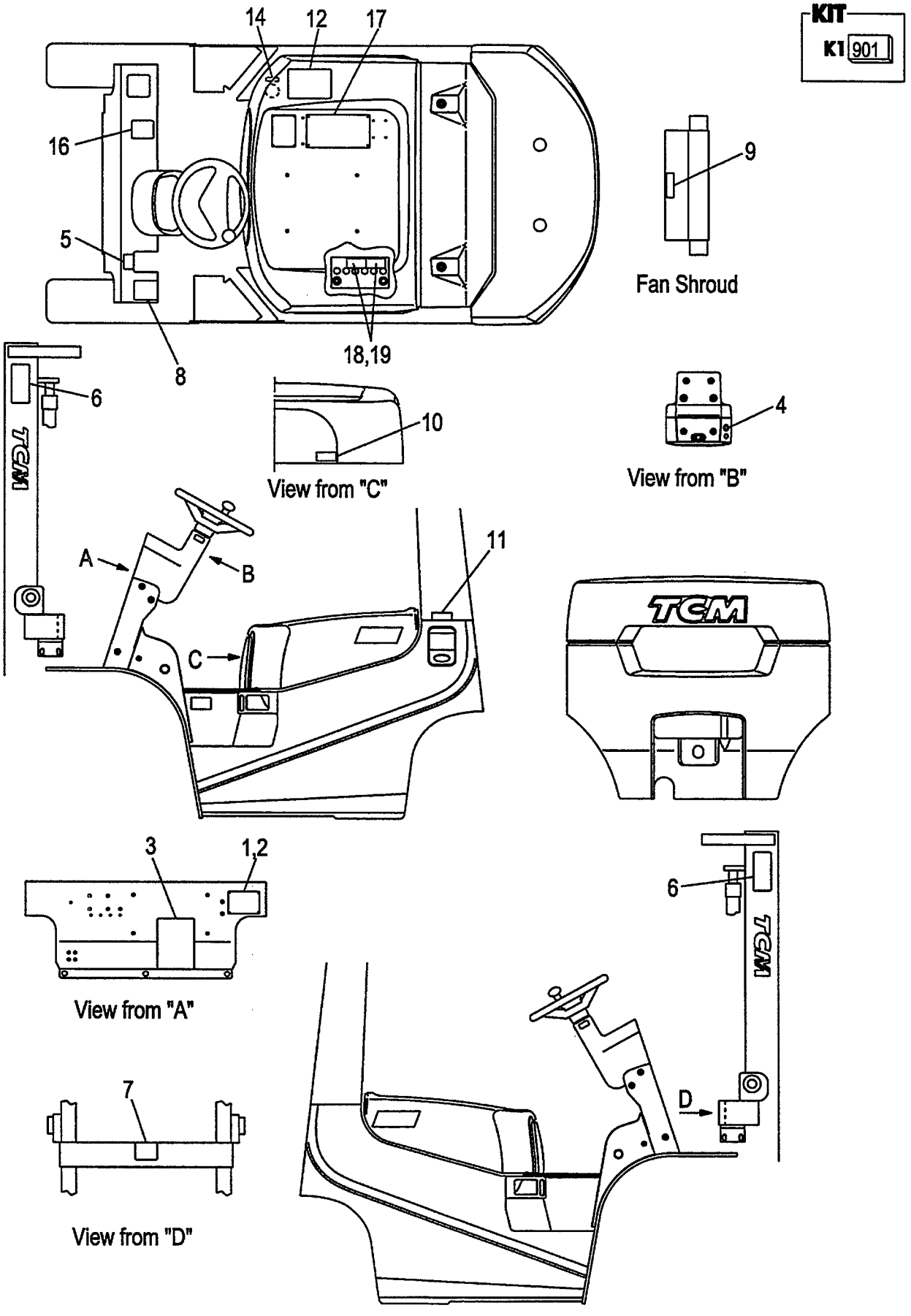

A:FD20C7 FD25C7
B:FD20T7 FD25T7

FIG.198
(F60291B0)

Item No	Part No.	Mark	Description	Req'd	Remarks : Serial No.
-	225R9-12071		DECAL,HYDRAULIC-OIL デカル	1	[EXB/RUSSIA]
15	225R9-12081	+	DECAL,PAN-HEATER-OIL デカル	1	[EXB/RUSSIA]
16	571A3-82361	*	DECAL,CAUTION デカル	1	[EXB]
17	516G3-82801	*	DECAL,CAUTION デカル	1	[EXB/ENGLISH]
-	516G3-82821		DECAL,CAUTION デカル	1	[EXB/SPANISH]
-	516G3-82831		DECAL,CAUTION デカル	1	[EXB/FRENCH]
-	52672-82073		DECAL,WARNING-PLATE デカル	1	[EXB/CHINESE]
-	225R9-12052		DECAL,CAUTION デカル	1	[EXB/RUSSIA]
18	534A3-82311		DECAL,BATTERY,A デカル	1	[EXB/ENGLISH]
-	534A3-82331		DECAL,BATTERY,A デカル	1	[EXB/SPANISH]
-	534A3-82341		DECAL,BATTERY,A デカル	1	[EXB/FRENCH]
-	534A3-82531		DECAL,BATTERY デカル	1	[EXB/CHINESE]
-	232W9-12101		DECAL,BATTERY,A デカル	1	[EXB/RUSSIA]
19	534A3-82421		DECAL,BATTERY,B デカル	1	[EXB/ENGLISH]
					(WITHOUT EXB/CHINESE)
-	534A3-82441		DECAL,BATTERY,B デカル	1	[EXB/SPANISH]
-	534A3-82451		DECAL,BATTERY,B デカル	1	[EXB/FRENCH]
-	232W9-12111		DECAL,BATTERY,B デカル	1	[EXB/RUSSIA]
20	55592-82001	+	DECAL,CERTIFICATE デカル	1	[EXB]

FIG.199 DECAL (2/2)[EXC]

(F60291C0) ﾃﾞｶﾙ(2/2)

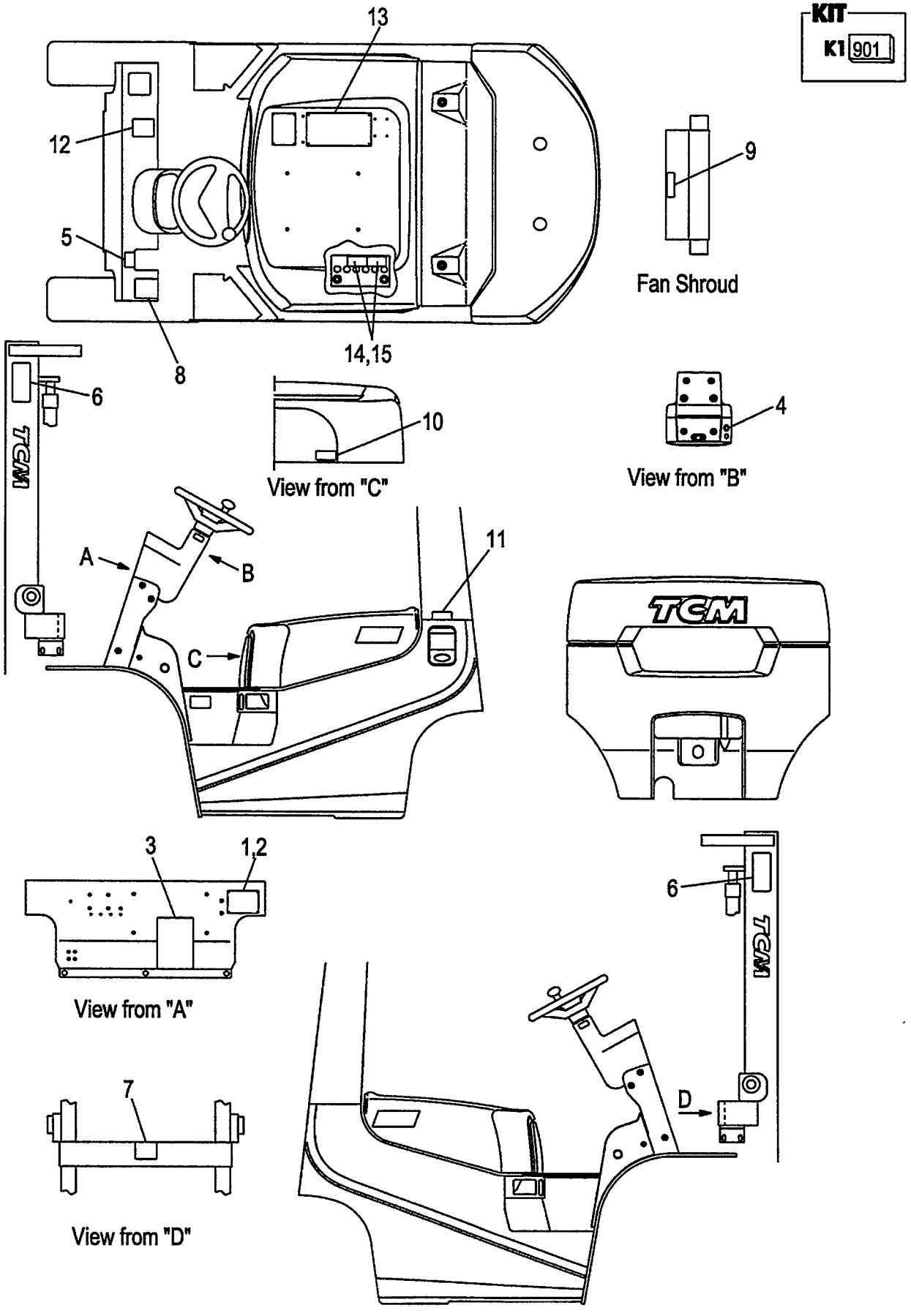

A:FD20C7 FD25C7
B:FD20T7 FD25T7

FIG.199
(F60291C0)

Item No	Part No.	Mark	Description		Req'd	Remarks : Serial No.
901	236A9-19811	K1	KIT,DECAL	ﾃﾞｶﾙｷｯﾄ	1	[EXC]
						INC.3-9,12,13 & FIG.196:4-6
1	NO PART NO.	#	PLATE,NAME	ﾌﾟﾚｰﾄ	1	[EXC]
2	216G9-12131		RIVET	ﾘﾍﾞｯﾄ	4	[EXC]
3	52672-72122	*	CHART,LUBRICATION	ﾁｬｰﾄ	1	[EXC]
4	216G9-12071		DECAL,STARTER-SWITCH	ﾃﾞｶﾙ	1	[EXC]
5	514A3-82002	*	DECAL,BRAKE-LEVER	ﾃﾞｶﾙ	1	[EXC]
6	27419-12061	*	DECAL,MAST-CAUTION	ﾃﾞｶﾙ	2	[EXC]
7	27419-12071	*	DECAL,CROSS-BEAM	ﾃﾞｶﾙ	1	[EXC]
8	516G2-72711	*	DECAL,TIRE-CAUTION	ﾃﾞｶﾙ	1	[EXC]
9	516G2-72701	*	DECAL,FAN-CAUTION	ﾃﾞｶﾙ	1	[EXC]
10	536G2-82181		DECAL,FUEL-CAPACITY	ﾃﾞｶﾙ	1	[EXC]
11	522A2-72111		DECAL,LIGHT-OIL	ﾃﾞｶﾙ	1	[EXC]
12	571A3-82361	*	DECAL,CAUTION	ﾃﾞｶﾙ	1	[EXC]
13	516G3-82801	*	DECAL,CAUTION	ﾃﾞｶﾙ	1	[EXC]
14	534A3-82311		DECAL,BATTERY,A	ﾃﾞｶﾙ	1	[EXC]
15	534A3-82421		DECAL,BATTERY,B	ﾃﾞｶﾙ	1	[EXC]
16	55592-82001	+	DECAL,CERTIFICATE	ﾃﾞｶﾙ	1	[EXC]

FIG.200 DECAL (2/2)[EXE]

(F60291E0) ﾃﾞｶﾙ(2/2)

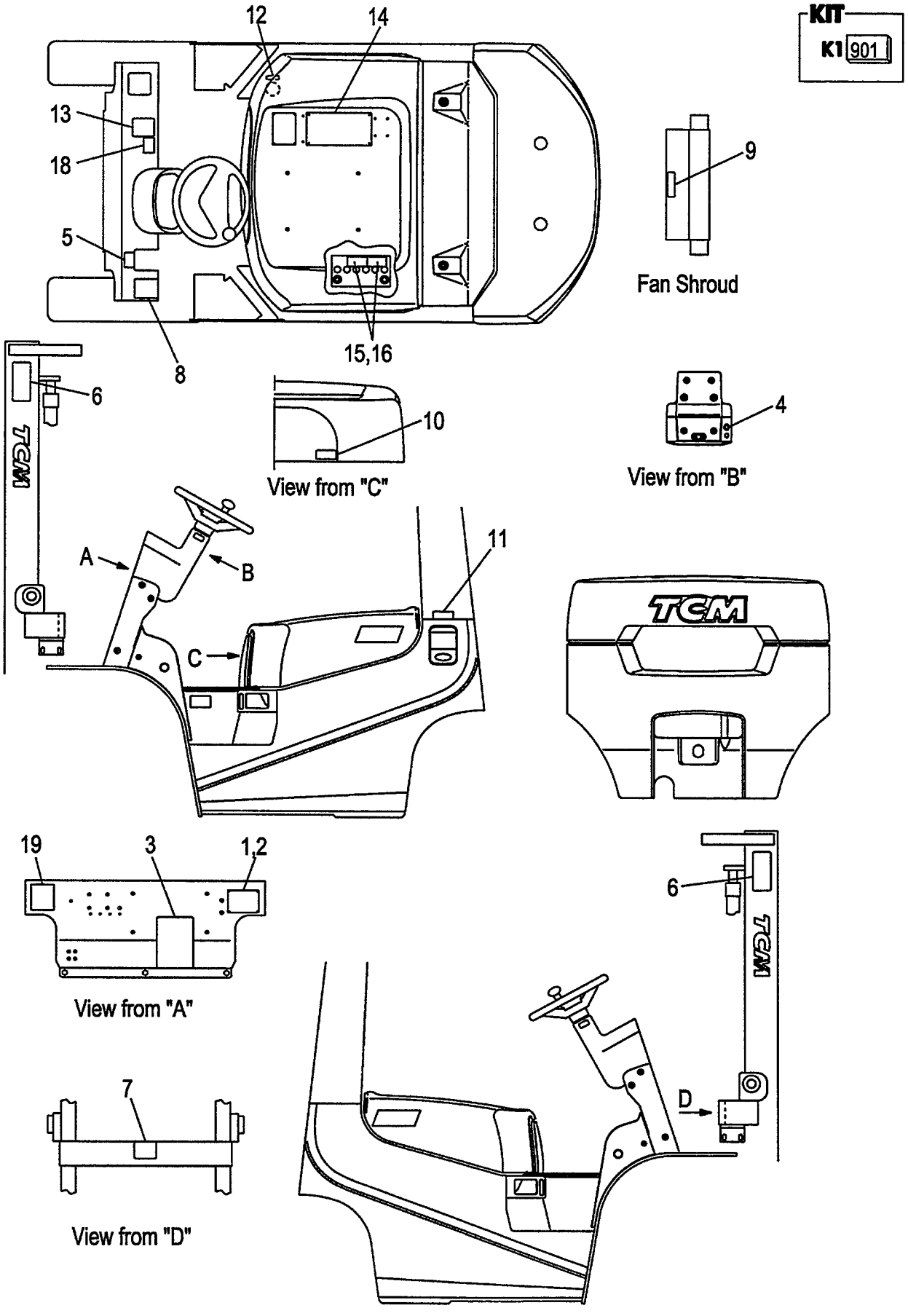

A:FD20C7 FD25C7
B:FD20T7 FD25T7

Item No	Part No.	Mark	Description		Req'd	Remarks : Serial No.
901	236A9-19811	K1	KIT,DECAL	ﾃﾞｶﾙｷｯﾄ	1	[EXE/ENGLISH]
						INC.3-9,13,14 & FIG.196:4-6
1	NO PART NO.	#	PLATE,NAME	ﾌﾟﾚｰﾄ	1	[EXE/ENGLISH]
-	NO PART NO.	#	PLATE,NAME	ﾌﾟﾚｰﾄ	1	[EXE/SPANISH]
-	NO PART NO.	#	PLATE,NAME	ﾌﾟﾚｰﾄ	1	[EXE/FRENCH]
-	NO PART NO.	#	PLATE,NAME	ﾌﾟﾚｰﾄ	1	[EXE/GERMAN]
-	NO PART NO.	#	PLATE,NAME	ﾌﾟﾚｰﾄ	1	[EXE/DUTCH]
-	NO PART NO.	#	PLATE,NAME	ﾌﾟﾚｰﾄ	1	[EXE/DANISH]
-	NO PART NO.	#	PLATE,NAME	ﾌﾟﾚｰﾄ	1	[EXE/ITALIAN]
-	NO PART NO.	#	PLATE,NAME	ﾌﾟﾚｰﾄ	1	[EXE/GREEK]
-	NO PART NO.	#	PLATE,NAME	ﾌﾟﾚｰﾄ	1	[EXE/PORTUGUESE]
2	216G9-12131		RIVET	ﾘﾍﾞｯﾄ	4	[EXE]
3	52672-72122	*	CHART,LUBRICATION	ﾁｬｰﾄ	1	[EXE/ENGLISH]
-	53652-82352		CHART,LUBRICATION	ﾁｬｰﾄ	1	[EXE/SPANISH]
-	22959-12052		CHART,LUBRICATION	ﾁｬｰﾄ	1	[EXE/FRENCH]
-	55953-02032		CHART,LUBRICATION	ﾁｬｰﾄ	1	[EXE/GERMAN]
-	522A3-83081		CHART,LUBRICATION	ﾁｬｰﾄ	1	[EXE/DUTCH]
-	522A3-83281		CHART,LUBRICATION	ﾁｬｰﾄ	1	[EXE/DANISH]
-	522A3-83481		CHART,LUBRICATION	ﾁｬｰﾄ	1	[EXE/ITALIAN]
-	522A3-83681		CHART,LUBRICATION	ﾁｬｰﾄ	1	[EXE/GREEK]
-	522A3-83881		CHART,LUBRICATION	ﾁｬｰﾄ	1	[EXE/PORTUGUESE]
4	216G9-12071		DECAL,STARTER-SWITCH	ﾃﾞｶﾙ	1	[EXE]
-	516G3-82011		DECAL,STARTER-SWITCH	ﾃﾞｶﾙ	1	[EXE/SPANISH]
-	516G3-82001		DECAL,STARTER-SWITCH	ﾃﾞｶﾙ	1	[EXE/GERMAN]
-	516G3-82021		DECAL,STARTER-SWITCH	ﾃﾞｶﾙ	1	[EXE/DUTCH]
-	516G3-82031		DECAL,STARTER-SWITCH	ﾃﾞｶﾙ	1	[EXE/DANISH]
-	516G3-82041		DECAL,STARTER-SWITCH	ﾃﾞｶﾙ	1	[EXE/ITALIAN]
-	516G3-82051		DECAL,STARTER-SWITCH	ﾃﾞｶﾙ	1	[EXE/GREEK]
5	514A3-82002	*	DECAL,BRAKE-LEVER	ﾃﾞｶﾙ	1	[EXE/ENGLISH]
-	514A3-82012		DECAL,BRAKE-LEVER	ﾃﾞｶﾙ	1	[EXE/SPANISH]
-	514A3-82022		DECAL,BRAKE-LEVER	ﾃﾞｶﾙ	1	[EXE/FRENCH]
-	514A3-02002		DECAL,BRAKE-LEVER	ﾃﾞｶﾙ	1	[EXE/GERMAN]
-	514A3-82032		DECAL,BRAKE-LEVER	ﾃﾞｶﾙ	1	[EXE/DUTCH]
-	514A3-82042		DECAL,BRAKE-LEVER	ﾃﾞｶﾙ	1	[EXE/DANISH]
-	514A3-82052		DECAL,BRAKE-LEVER	ﾃﾞｶﾙ	1	[EXE/ITALIAN]
-	514A3-82062		DECAL,BRAKE-LEVER	ﾃﾞｶﾙ	1	[EXE/GREEK]
-	514A3-82072		DECAL,BRAKE-LEVER	ﾃﾞｶﾙ	1	[EXE/PORTUGUESE]
6	27419-12061	*	DECAL,MAST-CAUTION	ﾃﾞｶﾙ	2	[EXE]
7	27419-12071	*	DECAL,CROSS-BEAM	ﾃﾞｶﾙ	1	[EXE]
8	516G2-72711	*	DECAL,TIRE-CAUTION	ﾃﾞｶﾙ	1	[EXE/ENGLISH]
-	516G3-82211		DECAL,TIRE-CAUTION	ﾃﾞｶﾙ	1	[EXE/SPANISH]
-	516G3-82221		DECAL,TIRE-CAUTION	ﾃﾞｶﾙ	1	[EXE/FRENCH]
-	516G3-82201		DECAL,TIRE-CAUTION	ﾃﾞｶﾙ	1	[EXE/GERMAN]
-	516G3-82232		DECAL,TIRE-CAUTION	ﾃﾞｶﾙ	1	[EXE/DUTCH]
-	516G3-82241		DECAL,TIRE-CAUTION	ﾃﾞｶﾙ	1	[EXE/DANISH]
-	516G3-82251		DECAL,TIRE-CAUTION	ﾃﾞｶﾙ	1	[EXE/ITALIAN]
-	516G3-82261		DECAL,TIRE-CAUTION	ﾃﾞｶﾙ	1	[EXE/GREEK]
-	516G3-82271		DECAL,TIRE-CAUTION	ﾃﾞｶﾙ	1	[EXE/PORTUGUESE]
9	516G2-72701	*	DECAL,FAN-CAUTION	ﾃﾞｶﾙ	1	[EXE/ENGLISH]
-	516G3-82111		DECAL,FAN-CAUTION	ﾃﾞｶﾙ	1	[EXE/SPANISH]

FIG.200 DECAL (2/2)[EXE]

(F60291E0) ﾃﾞｶﾙ(2/2)

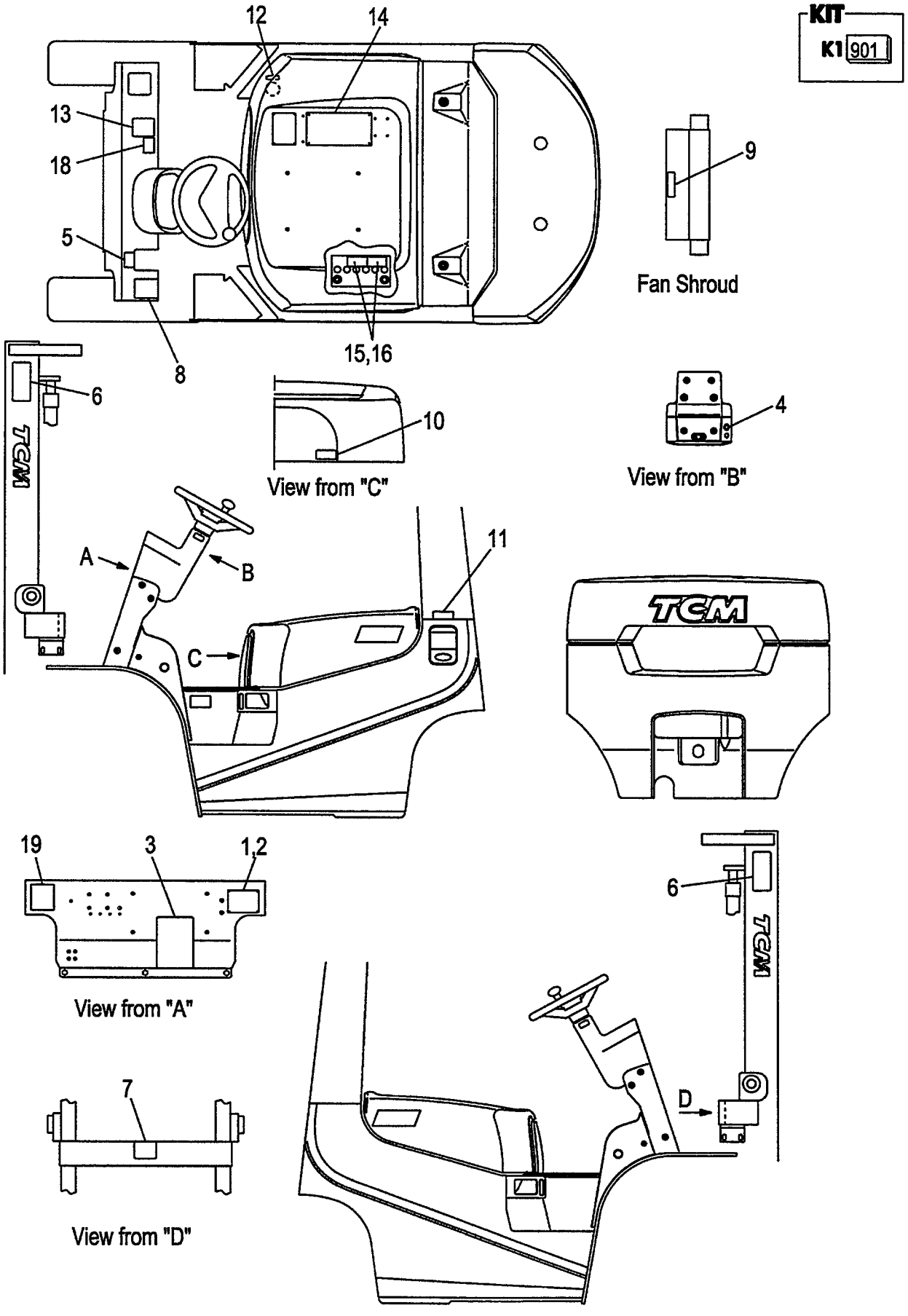

A:FD20C7 FD25C7
B:FD20T7 FD25T7

FIG.200
(F60291E0)

Item No	Part No.	Mark	Description	Req'd	Remarks : Serial No.
-	516G3-82121		DECAL,FAN-CAUTION デカル	1	[EXE/FRENCH]
-	516G3-82101		DECAL,FAN-CAUTION デカル	1	[EXE/GERMAN]
-	516G3-82131		DECAL,FAN-CAUTION デカル	1	[EXE/DUTCH]
-	516G3-82141		DECAL,FAN-CAUTION デカル	1	[EXE/DANISH]
-	516G3-82151		DECAL,FAN-CAUTION デカル	1	[EXE/ITALIAN]
-	516G3-82161		DECAL,FAN-CAUTION デカル	1	[EXE/GREEK]
-	516G3-82171		DECAL,FAN-CAUTION デカル	1	[EXE/PORTUGUESE]
10	536G2-82181		DECAL,FUEL-CAPACITY デカル	1	[EXE/ENGLISH]
-	536G3-82001		DECAL,FUEL-CAPACITY デカル	1	[EXE/SPANISH]
-	536G3-82011		DECAL,FUEL-CAPACITY デカル	1	[EXE/FRENCH]
-	536G3-82021		DECAL,FUEL-CAPACITY デカル	1	[EXE/GERMAN]
-	536G3-82031		DECAL,FUEL-CAPACITY デカル	1	[EXE/DUTCH]
-	536G3-82041		DECAL,FUEL-CAPACITY デカル	1	[EXE/DANISH]
-	536G3-82051		DECAL,FUEL-CAPACITY デカル	1	[EXE/ITALIAN]
-	536G3-82061		DECAL,FUEL-CAPACITY デカル	1	[EXE/GREEK]
-	536G3-82071		DECAL,FUEL-CAPACITY デカル	1	[EXE/PORTUGUESE]
11	522A2-72111		DECAL,LIGHT-OIL デカル	1	[EXE/ENGLISH]
-	51152-82022		DECAL,LIGHT-OIL デカル	1	[EXE/SPANISH]
-	51152-82012		DECAL,LIGHT-OIL デカル	1	[EXE/FRENCH]
-	51153-02001		DECAL,LIGHT-OIL デカル	1	[EXE/GERMAN]
-	522A3-83021		DECAL,LIGHT-OIL デカル	1	[EXE/DUTCH]
-	522A3-83221		DECAL,LIGHT-OIL デカル	1	[EXE/DANISH]
-	522A3-83421		DECAL,LIGHT-OIL デカル	1	[EXE/ITALIAN]
-	522A3-83621		DECAL,LIGHT-OIL デカル	1	[EXE/GREEK]
-	522A3-83821		DECAL,LIGHT-OIL デカル	1	[EXE/PORTUGUESE]
12	53652-82401		DECAL,OIL デカル	1	[EXE/SPANISH]
-	53652-82011		DECAL,OIL デカル	1	[EXE/FRENCH]
-	51233-02021		DECAL,OIL デカル	1	[EXE/GERMAN]
-	522A3-83061		DECAL,OIL デカル	1	[EXE/DUTCH][EXE/DANISH]
-	522A3-83461		DECAL,OIL デカル	1	[EXE/ITALIAN]
-	522A3-83661		DECAL,OIL デカル	1	[EXE/GREEK]
-	522A3-83861		DECAL,OIL デカル	1	[EXE/PORTUGUESE]
13	571A3-82361	*	DECAL,CAUTION デカル	1	[EXE]
14	516G3-82801	*	DECAL,CAUTION デカル	1	[EXE/ENGLISH]
-	516G3-82821		DECAL,CAUTION デカル	1	[EXE/SPANISH]
-	516G3-82831		DECAL,CAUTION デカル	1	[EXE/FRENCH]
-	516G3-82811		DECAL,CAUTION デカル	1	[EXE/GERMAN]
-	516G3-82841		DECAL,CAUTION デカル	1	[EXE/DUTCH]
-	516G3-82851		DECAL,CAUTION デカル	1	[EXE/DANISH]
-	516G3-82861		DECAL,CAUTION デカル	1	[EXE/ITALIAN]
-	516G3-82871		DECAL,CAUTION デカル	1	[EXE/GREEK]
-	516G3-82881		DECAL,CAUTION デカル	1	[EXE/PORTUGUESE]
15	534A3-82311		DECAL,BATTERY,A デカル	1	[EXE/ENGLISH]
-	534A3-82331		DECAL,BATTERY,A デカル	1	[EXE/SPANISH]
-	534A3-82341		DECAL,BATTERY,A デカル	1	[EXE/FRENCH]
-	534A3-82321		DECAL,BATTERY,A デカル	1	[EXE/GERMAN]
-	534A3-82351		DECAL,BATTERY,A デカル	1	[EXE/DUTCH]
-	534A3-82361		DECAL,BATTERY,A デカル	1	[EXE/DANISH]
-	534A3-82371		DECAL,BATTERY,A デカル	1	[EXE/ITALIAN]
-	534A3-82381		DECAL,BATTERY,A デカル	1	[EXE/GREEK]

FIG.200 DECAL (2/2)[EXE]

(F60291E0) ﾃﾞｶﾙ(2/2)

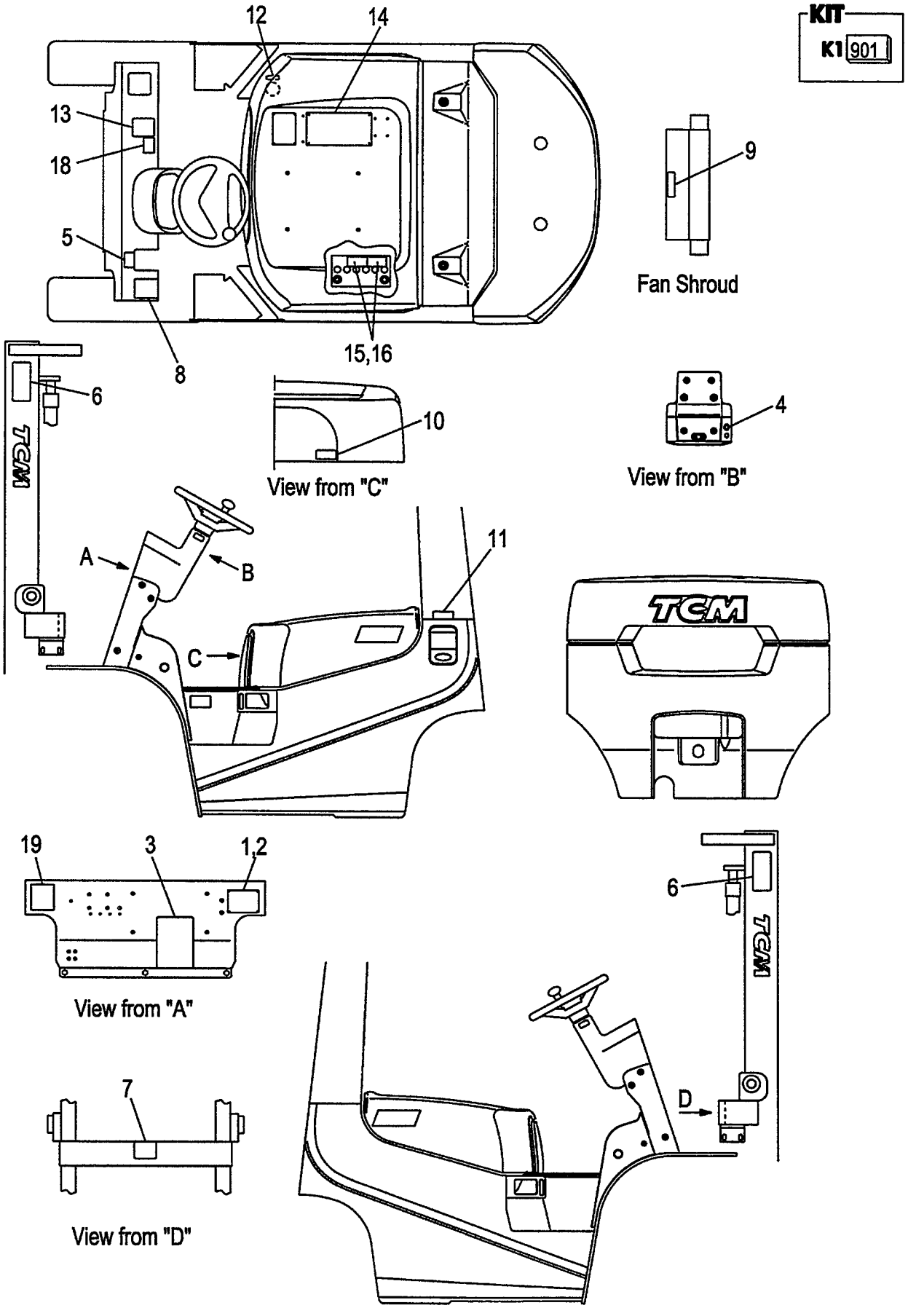

A:FD20C7 FD25C7
B:FD20T7 FD25T7

FIG.200
(F60291E0)

Item No	Part No.	Mark	Description	Req'd	Remarks : Serial No.
-	534A3-82391		DECAL,BATTERY,A デカル	1	[EXE/PORTUGUESE]
16	534A3-82421		DECAL,BATTERY,B デカル	1	[EXE/ENGLISH]
-	534A3-82441		DECAL,BATTERY,B デカル	1	[EXE/SPANISH]
-	534A3-82451		DECAL,BATTERY,B デカル	1	[EXE/FRENCH]
-	534A3-82431		DECAL,BATTERY,B デカル	1	[EXE/GERMAN]
-	534A3-82461		DECAL,BATTERY,B デカル	1	[EXE/DUTCH]
-	534A3-82471		DECAL,BATTERY,B デカル	1	[EXE/DANISH]
-	534A3-82481		DECAL,BATTERY,B デカル	1	[EXE/ITALIAN]
-	534A3-82491		DECAL,BATTERY,B デカル	1	[EXE/GREEK]
-	534A3-82501		DECAL,BATTERY,B デカル	1	[EXE/PORTUGUESE]
17	55592-82001	+	DECAL,CERTIFICATE デカル	1	[EXE]
18	535H3-82411		DECAL,CREEP-CAUTION デカル	1	B [EXE/ENGLISH]
-	535H3-82421		DECAL,CREEP-CAUTION デカル	1	B [EXE/SPANISH]
-	535H3-82431		DECAL,CREEP-CAUTION デカル	1	B [EXE/FRENCH]
-	535H3-82441		DECAL,CREEP-CAUTION デカル	1	B [EXE/GERMAN]
-	535H3-82451		DECAL,CREEP-CAUTION デカル	1	B [EXE/DUTCH]
-	535H3-82461		DECAL,CREEP-CAUTION デカル	1	B [EXE/DANISH]
-	535H3-82471		DECAL,CREEP-CAUTION デカル	1	B [EXE/ITALIAN]
-	535H3-82481		DECAL,CREEP-CAUTION デカル	1	B [EXE/GREEK]
-	535H3-82491		DECAL,CREEP-CAUTION デカル	1	B [EXE/PORTUGUESE]
19	535E3-82231		DECAL,EC-SOUND デカル	1	[EXE]

FIG.201 DECAL (2/2)[EXK]

(F60291K0) ﾃﾞｶﾙ(2/2)

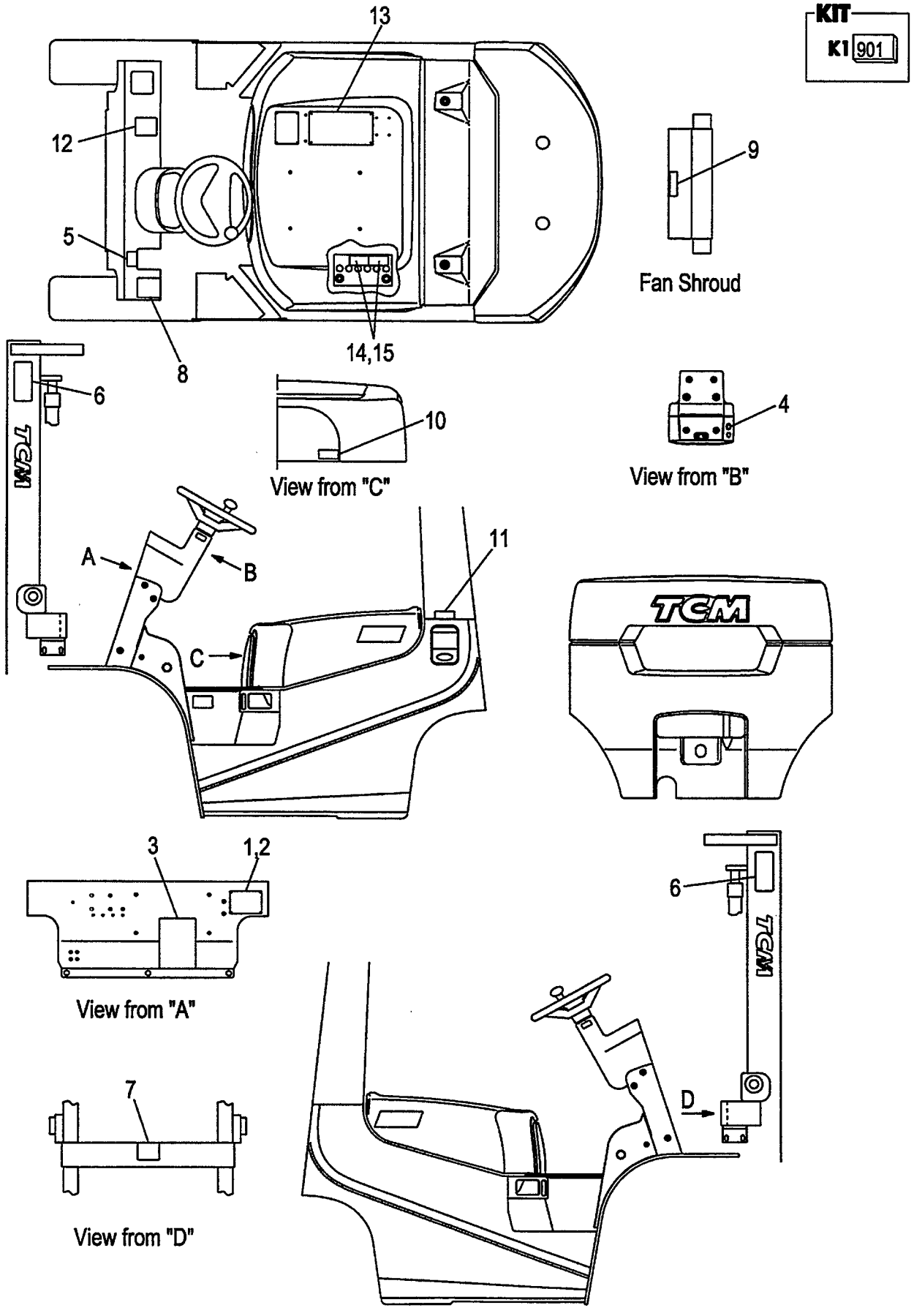

A:FD20C7 FD25C7
B:FD20T7 FD25T7

FIG.201
(F60291K0)

Item No	Part No.	Mark	Description		Req'd	Remarks : Serial No.
901	236A9-19811	K1	KIT,DECAL	ﾃﾞｶﾙｷｯﾄ	1	[EXK]
						INC.3-9,12,13 & FIG.196:4-6
1	NO PART NO.	#	PLATE,NAME	ﾌﾟﾚｰﾄ	1	[EXK]
2	216G9-12131		RIVET	ﾘﾍﾞｯﾄ	4	[EXK]
3	52672-72122	*	CHART,LUBRICATION	ﾁｬｰﾄ	1	[EXK]
4	216G9-12071		DECAL,STARTER-SWITCH	ﾃﾞｶﾙ	1	[EXK]
5	514A3-82002	*	DECAL,BRAKE-LEVER	ﾃﾞｶﾙ	1	[EXK]
6	27419-12061	*	DECAL,MAST-CAUTION	ﾃﾞｶﾙ	2	[EXK]
7	27419-12071	*	DECAL,CROSS-BEAM	ﾃﾞｶﾙ	1	[EXK]
8	516G2-72711	*	DECAL,TIRE-CAUTION	ﾃﾞｶﾙ	1	[EXK]
9	516G2-72701	*	DECAL,FAN-CAUTION	ﾃﾞｶﾙ	1	[EXK]
10	536G2-82181		DECAL,FUEL-CAPACITY	ﾃﾞｶﾙ	1	[EXK]
11	522A2-72111		DECAL,LIGHT-OIL	ﾃﾞｶﾙ	1	[EXK]
12	571A3-82361	*	DECAL,CAUTION	ﾃﾞｶﾙ	1	[EXK]
13	516G3-82801	*	DECAL,CAUTION	ﾃﾞｶﾙ	1	[EXK]
14	534A3-82311		DECAL,BATTERY,A	ﾃﾞｶﾙ	1	[EXK]
15	534A3-82421		DECAL,BATTERY,B	ﾃﾞｶﾙ	1	[EXK]
16	55592-82001	+	DECAL,CERTIFICATE	ﾃﾞｶﾙ	1	[EXK]

FIG.202 DECAL (2/2)[EXN]

(F60291N0) ﾃﾞｶﾙ(2/2)

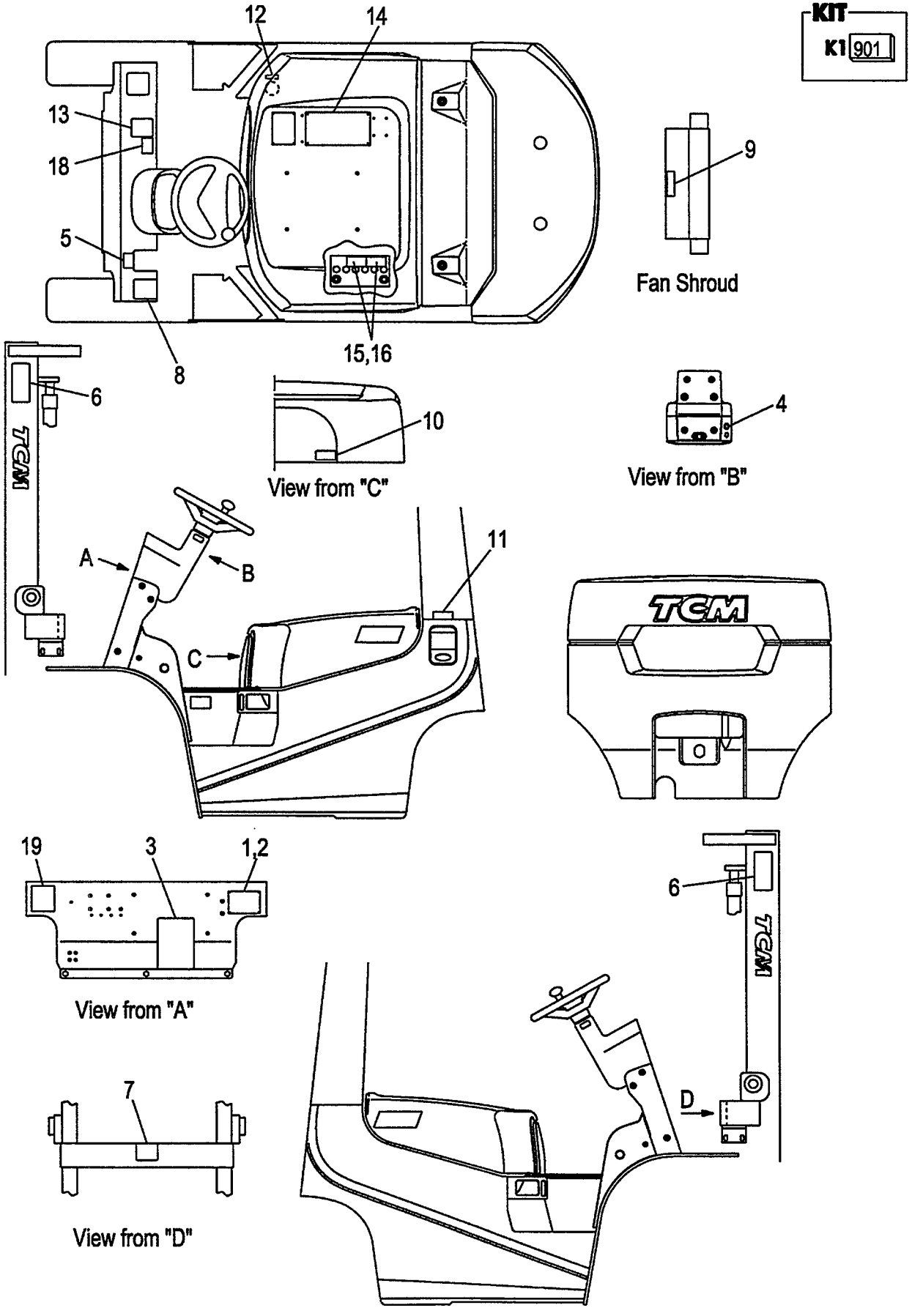

A:FD20C7 FD25C7
B:FD20T7 FD25T7

FIG.202
(F60291N0)

Item No	Part No.	Mark	Description		Req'd	Remarks : Serial No.
901	236A9-19811	K1	KIT,DECAL	ﾃﾞｶﾙｷｯﾄ	1	[EXN/ENGLISH]
						INC.3-9,13,14 & FIG.196:4-6
1	NO PART NO.	#	PLATE,NAME	ﾌﾟﾚｰﾄ	1	[EXN/ENGLISH]
-	NO PART NO.	#	PLATE,NAME	ﾌﾟﾚｰﾄ	1	[EXN/DANISH]
-	NO PART NO.	#	PLATE,NAME	ﾌﾟﾚｰﾄ	1	[EXN/SWEDISH]
-	NO PART NO.	#	PLATE,NAME	ﾌﾟﾚｰﾄ	1	[EXN/FINNISH]
2	216G9-12131		RIVET	ﾘﾍﾞｯﾄ	4	[EXN]
3	52672-72122	*	CHART,LUBRICATION	ﾁｬｰﾄ	1	[EXN/ENGLISH]
-	522A3-83281		CHART,LUBRICATION	ﾁｬｰﾄ	1	[EXN/DANISH]
-	529F3-82171		CHART,LUBRICATION	ﾁｬｰﾄ	1	[EXN/SWEDISH]
-	529F3-82161		CHART,LUBRICATION	ﾁｬｰﾄ	1	[EXN/FINNISH]
4	216G9-12071		DECAL,STARTER-SWITCH	ﾃﾞｶﾙ	1	[EXN/ENGLISH]
-	516G3-82031		DECAL,STARTER-SWITCH	ﾃﾞｶﾙ	1	[EXN/DANISH]
-	516G3-82071		DECAL,STARTER-SWITCH	ﾃﾞｶﾙ	1	[EXN/SWEDISH]
-	516G3-82061		DECAL,STARTER-SWITCH	ﾃﾞｶﾙ	1	[EXN/FINNISH]
5	514A3-82002	*	DECAL,BRAKE-LEVER	ﾃﾞｶﾙ	1	[EXN/ENGLISH]
-	514A3-82042		DECAL,BRAKE-LEVER	ﾃﾞｶﾙ	1	[EXN/DANISH]
-	529F3-82252		DECAL,BRAKE-LEVER	ﾃﾞｶﾙ	1	[EXN/SWEDISH]
-	529F3-82242		DECAL,BRAKE-LEVER	ﾃﾞｶﾙ	1	[EXN/FINNISH]
6	27419-12061	*	DECAL,MAST-CAUTION	ﾃﾞｶﾙ	2	[EXN]
7	27419-12071	*	DECAL,CROSS-BEAM	ﾃﾞｶﾙ	1	[EXN]
8	516G2-72711	*	DECAL,TIRE-CAUTION	ﾃﾞｶﾙ	1	[EXN/ENGLISH]
-	516G3-82241		DECAL,TIRE-CAUTION	ﾃﾞｶﾙ	1	[EXN/DANISH]
-	516G3-82291		DECAL,TIRE-CAUTION	ﾃﾞｶﾙ	1	[EXN/SWEDISH]
-	516G3-82281		DECAL,TIRE-CAUTION	ﾃﾞｶﾙ	1	[EXN/FINNISH]
9	516G2-72701	*	DECAL,FAN-CAUTION	ﾃﾞｶﾙ	1	[EXN/ENGLISH]
-	516G3-82141		DECAL,FAN-CAUTION	ﾃﾞｶﾙ	1	[EXN/DANISH]
-	516G3-82191		DECAL,FAN-CAUTION	ﾃﾞｶﾙ	1	[EXN/SWEDISH]
-	516G3-82181		DECAL,FAN-CAUTION	ﾃﾞｶﾙ	1	[EXN/FINNISH]
10	536G2-82181		DECAL,FUEL-CAPACITY	ﾃﾞｶﾙ	1	[EXN/ENGLISH]
-	536G3-82041		DECAL,FUEL-CAPACITY	ﾃﾞｶﾙ	1	[EXN/DANISH]
-	536G3-82091		DECAL,FUEL-CAPACITY	ﾃﾞｶﾙ	1	[EXN/SWEDISH]
-	536G3-82081		DECAL,FUEL-CAPACITY	ﾃﾞｶﾙ	1	[EXN/FINNISH]
11	522A2-72111		DECAL,LIGHT-OIL	ﾃﾞｶﾙ	1	[EXN/ENGLISH]
-	522A3-83221		DECAL,LIGHT-OIL	ﾃﾞｶﾙ	1	[EXN/DANISH]
-	529F3-82051		DECAL,LIGHT-OIL	ﾃﾞｶﾙ	1	[EXN/SWEDISH]
-	529F3-82041		DECAL,LIGHT-OIL	ﾃﾞｶﾙ	1	[EXN/FINNISH]
12	522A3-83061		DECAL,OIL	ﾃﾞｶﾙ	1	[EXN/DANISH]
-	529F3-82071		DECAL,OIL	ﾃﾞｶﾙ	1	[EXN/SWEDISH]
-	529F3-82061		DECAL,OIL	ﾃﾞｶﾙ	1	[EXN/FINNISH]
13	571A3-82361	*	DECAL,CAUTION	ﾃﾞｶﾙ	1	[EXN]
14	516G3-82801	*	DECAL,CAUTION	ﾃﾞｶﾙ	1	[EXN/ENGLISH]
-	516G3-82851		DECAL,CAUTION	ﾃﾞｶﾙ	1	[EXN/DANISH]
-	516G3-82891		DECAL,CAUTION	ﾃﾞｶﾙ	1	[EXN/SWEDISH]
-	516G3-82901		DECAL,CAUTION	ﾃﾞｶﾙ	1	[EXN/FINNISH]
15	534A3-82311		DECAL,BATTERY,A	ﾃﾞｶﾙ	1	[EXN/ENGLISH]
-	534A3-82361		DECAL,BATTERY,A	ﾃﾞｶﾙ	1	[EXN/DANISH]
-	534A3-82411		DECAL,BATTERY,A	ﾃﾞｶﾙ	1	[EXN/SWEDISH]
-	534A3-82401		DECAL,BATTERY,A	ﾃﾞｶﾙ	1	[EXN/FINNISH]
16	534A3-82421		DECAL,BATTERY,B	ﾃﾞｶﾙ	1	[EXN/ENGLISH]

FIG.202 DECAL (2/2)[EXN]

(F60291N0) ﾃﾞｶﾙ(2/2)

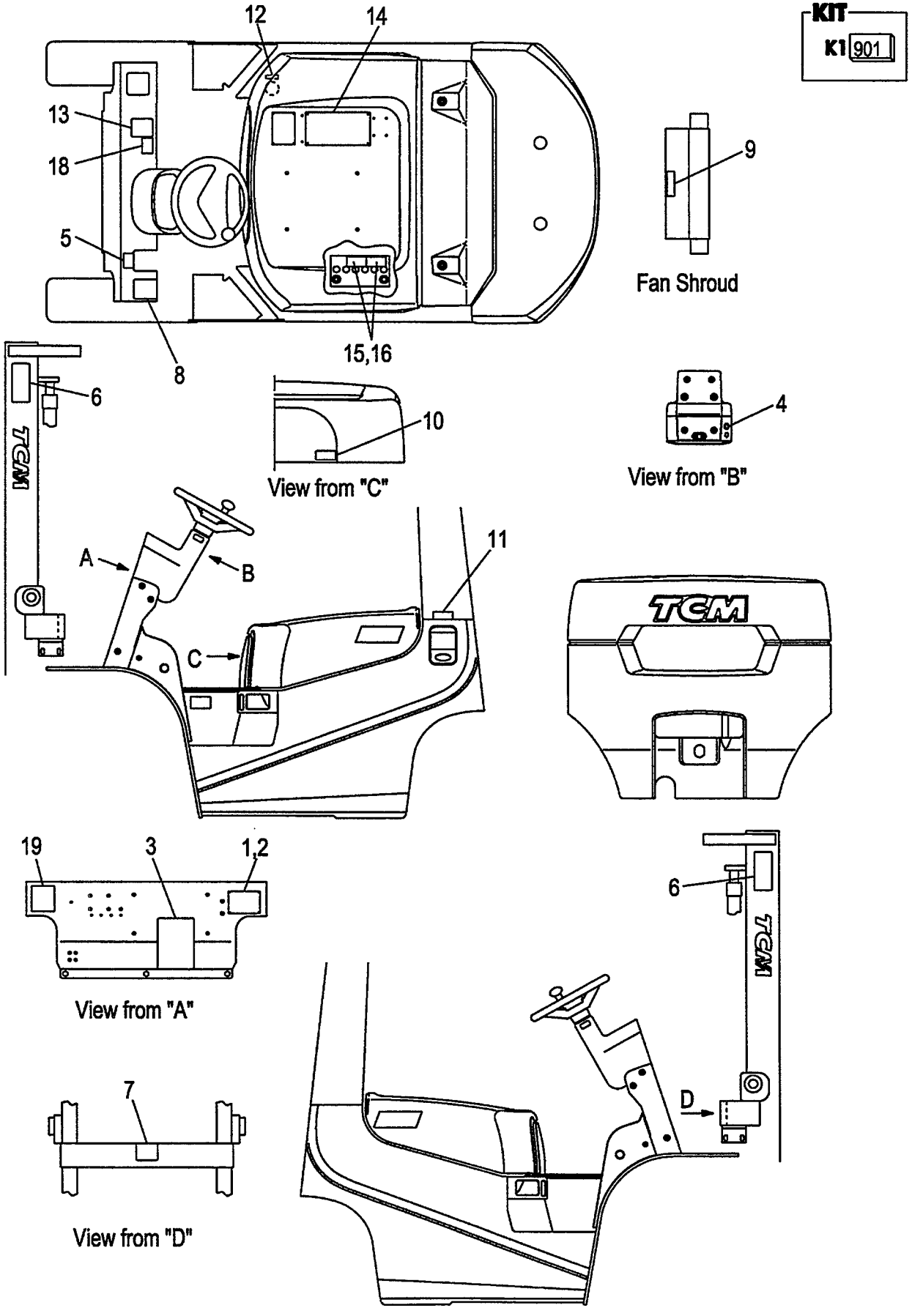

A:FD20C7 FD25C7
B:FD20T7 FD25T7

FIG.202
(F60291N0)

Item No	Part No.	Mark	Description	Req'd	Remarks : Serial No.
-	534A3-82471		DECAL,BATTERY,B デカル	1	[EXN/DANISH]
-	534A3-82521		DECAL,BATTERY,B デカル	1	[EXN/SWEDISH]
-	534A3-82511		DECAL,BATTERY,B デカル	1	[EXN/FINNISH]
17	55592-82001	+	DECAL,CERTIFICATE デカル	1	[EXN]
18	535H3-82411		DECAL,CREEP-CAUTION デカル	1	B [EXN/ENGLISH]
-	535H3-82461		DECAL,CREEP-CAUTION デカル	1	B [EXN/DANISH]
-	535H3-82511		DECAL,CREEP-CAUTION デカル	1	B [EXN/SWEDISH]
-	535H3-82501		DECAL,CREEP-CAUTION デカル	1	B [EXN/FINNISH]
19	535E3-82231		DECAL,EC-SOUND デカル	1	[EXN]

FIG.203 SERVICE TOOL [TO][EX]

(F6029210) サービスツール

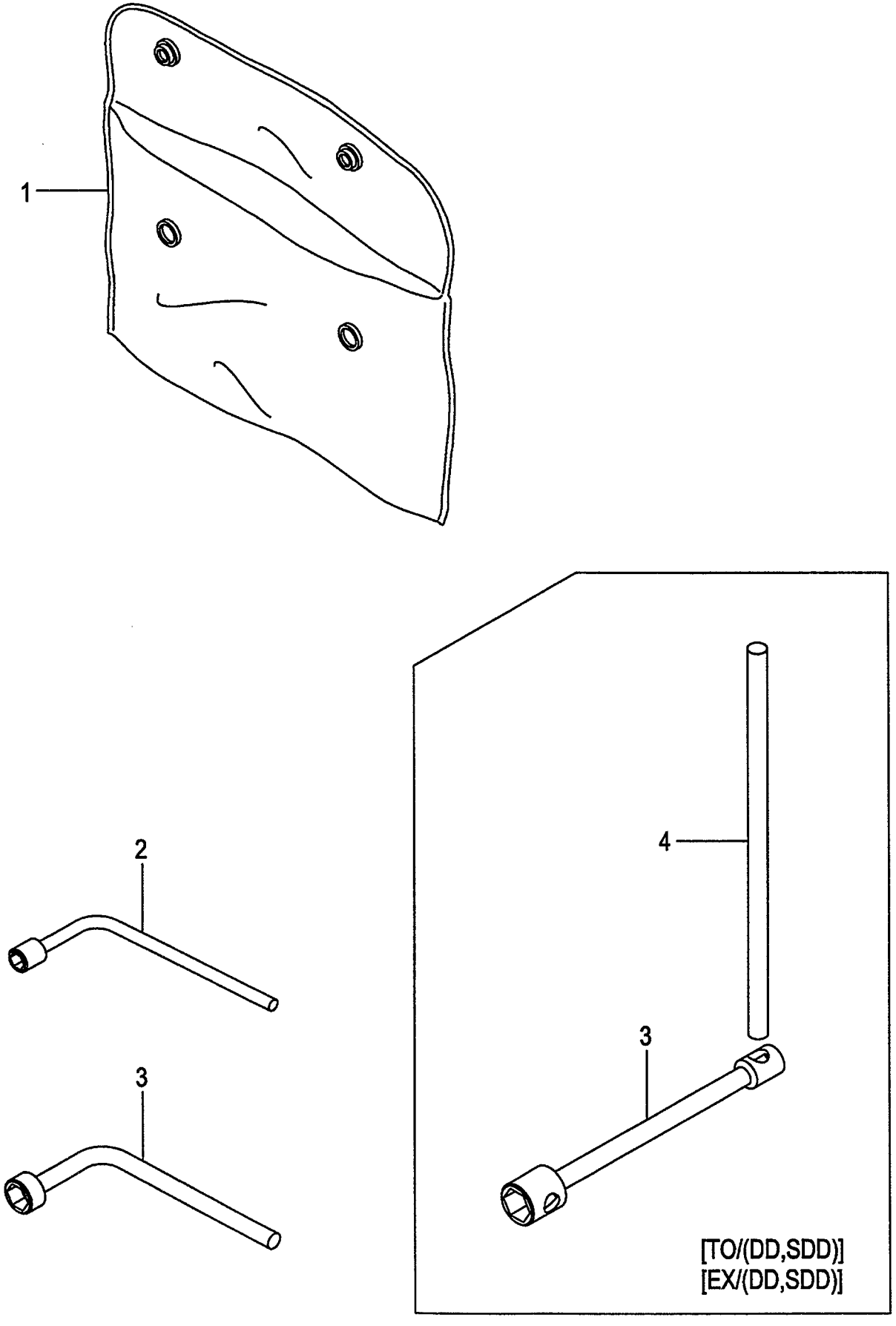

A:FD20C18 FD20T18 FD25C18 FD25T18
B:FD20C7 FD20T7 FD25C7 FD25T7
C:FD20W7 FD25W7

FIG.203
(F6029210)

Item No	Part No.	Mark	Description	Req'd	Remarks : Serial No.
1	214A9-20101		SACK,SERVICE-TOOLS サック	1	[TO]
-	214A9-20101		SACK,SERVICE-TOOLS サック	1	B [EX]
2	22199-22251		WRENCH,HUB-NUT,21MM レンチ	1	[TO](REAR)
-	22199-22251		WRENCH,HUB-NUT,21MM レンチ	1	B [EX](REAR)
3	25599-22001		WRENCH,HUB-NUT,32MM レンチ	1	[TO](FRONT)
-	25599-22001		WRENCH,HUB-NUT,32MM レンチ	1	B [EX](FRONT)
-	23819-20011		WRENCH,HUB-NUT,41MM レンチ	1	[TO/DD][TO/SDD](FRONT)
-	23819-20011		WRENCH,HUB-NUT,41MM レンチ	1	B [EX/DD][EX/SDD](FRONT)
4	23819-20021		LEVER,WRENCH,HUB-NUT レバー	1	[TO/DD][TO/SDD]
-	23819-20021		LEVER,WRENCH,HUB-NUT レバー	1	B [EX/DD][EX/SDD]

FIG.204 FIRE EXTINGUISHER [FE][FE M]

(F60293E0) ﾌｧｲﾔｲｸｽﾃｨﾝｸﾞｲｯｼｬ

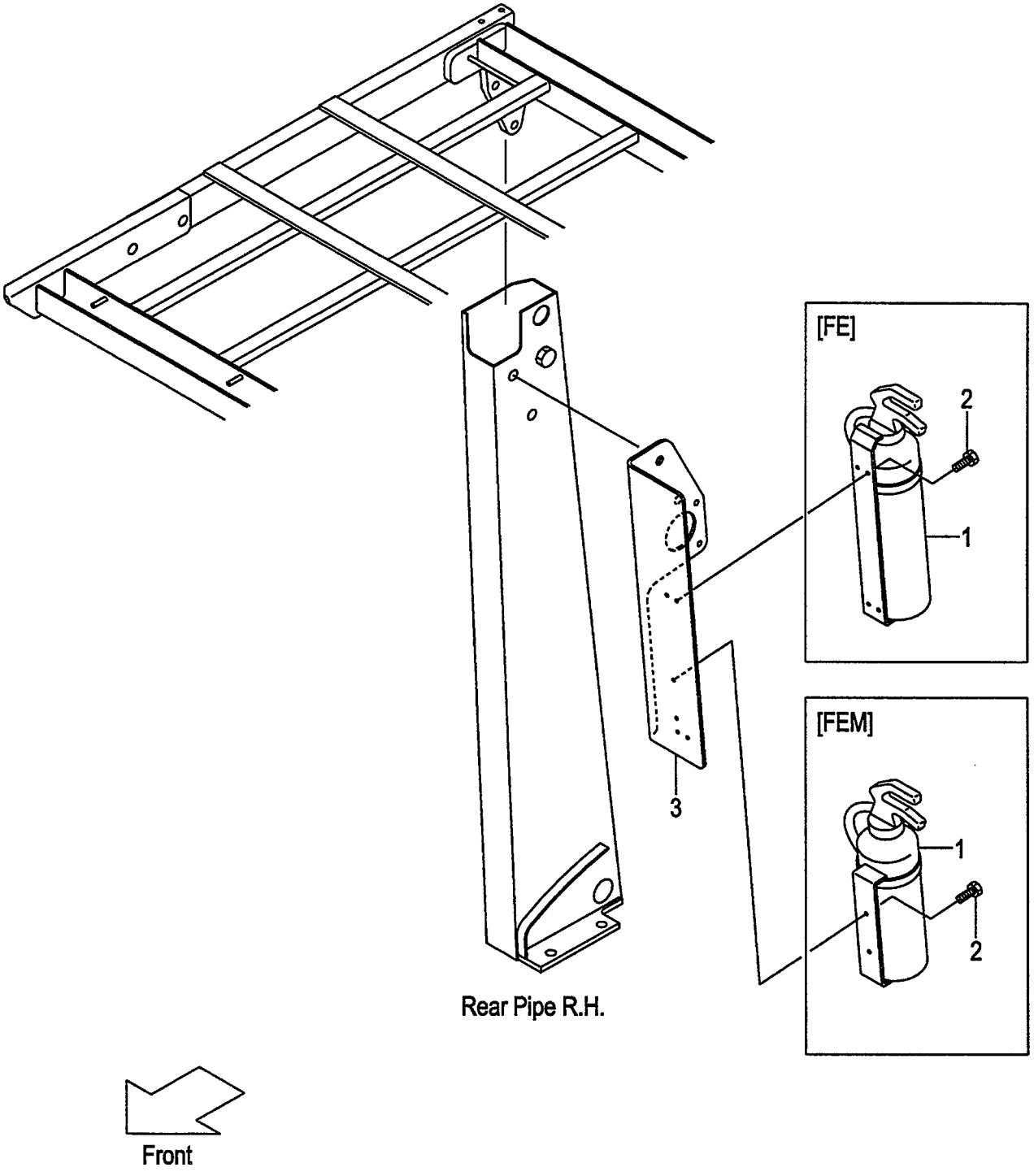

FIG.204
(F60293E0)

A:FD20C18 FD20T18 FD25C18 FD25T18
B:FD20C7 FD20T7 FD25C7 FD25T7 FD20W7 FD25W7

Item No	Part No.	Mark	Description		Req'd	Remarks : Serial No.
1	22679-12102		EXTINGUISHER,FIRE	ｲｸｽﾃｨﾝｸﾞｲｯｼｬ	1	[FE]
-	271A9-12191		EXTINGUISHER,FIRE	ｲｸｽﾃｨﾝｸﾞｲｯｼｬ	1	[FE M]
2	01183-05012		BOLT	ﾎﾞﾙﾄ	4	[FE]
-	01183-05012		BOLT	ﾎﾞﾙﾄ	2	[FE M]
3	539A9-62001		BRACKET,EXTINGUISHER	ﾌﾞﾗｹｯﾄ	1	[FE][FE M]

FIG.205 FORK [VM39A]

(M5028110) フォーク

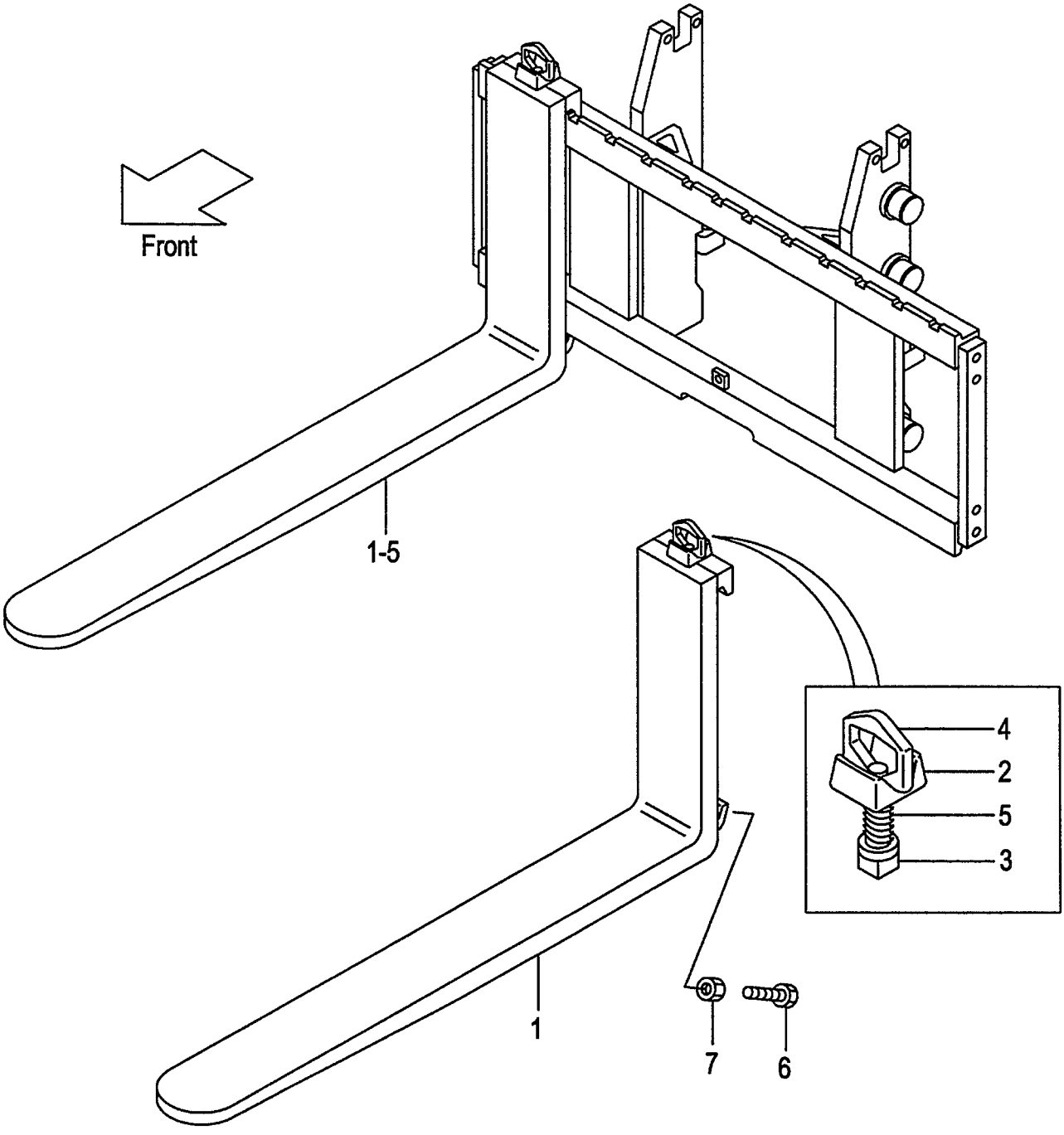

A:VM39A(2T)
B:VM39A(2.5T)

FIG.205
(M5028110)

Item No	Part No.	Mark	Description		Req'd	Remarks : Serial No.
1	231A8-10101		FORK	ﾌｫｰｸ	2	A (L=920) INC.2-5
-	214A8-10512		FORK	ﾌｫｰｸ	2	B (L=920) INC.2-5
-	231A8-10171		FORK	ﾌｫｰｸ	2	A [LF090] INC.2-5
-	231F8-10571		FORK	ﾌｫｰｸ	2	B [LF090] INC.2-5
-	231A8-10101		FORK	ﾌｫｰｸ	2	A [LF092] INC.2-5
-	231F8-10501		FORK	ﾌｫｰｸ	2	B [LF092] INC.2-5
-	214A8-10582		FORK	ﾌｫｰｸ	2	[LF100] INC.2-5
-	214A8-10512		FORK	ﾌｫｰｸ	2	[LF107][EX] INC.2-5
-	214A8-10592		FORK	ﾌｫｰｸ	2	[LF110] INC.2-5
-	214A8-10602		FORK	ﾌｫｰｸ	2	[LF120] INC.2-5
-	214A8-10522		FORK	ﾌｫｰｸ	2	[LF122] INC.2-5
-	214A8-10612		FORK	ﾌｫｰｸ	2	[LF130] INC.2-5
-	214A8-10532		FORK	ﾌｫｰｸ	2	[LF137] INC.2-5
-	214A8-10622		FORK	ﾌｫｰｸ	2	[LF140] INC.2-5
-	214A8-10632		FORK	ﾌｫｰｸ	2	[LF150] INC.2-5
-	214A8-10542		FORK	ﾌｫｰｸ	2	[LF152] INC.2-5
-	214A8-10642		FORK	ﾌｫｰｸ	2	[LF160] INC.2-5
-	214A8-10552		FORK	ﾌｫｰｸ	2	[LF167] INC.2-5
-	214A8-10653		FORK	ﾌｫｰｸ	2	[LF170] INC.2-5
-	214A8-10663		FORK	ﾌｫｰｸ	2	[LF180] INC.2-5
-	214A8-10563		FORK	ﾌｫｰｸ	2	[LF182] INC.2-5
-	214A8-10673		FORK	ﾌｫｰｸ	2	[LF190] INC.2-5
-	214A8-10683		FORK	ﾌｫｰｸ	2	[LF200] INC.2-5
-	234A8-10571		FORK	ﾌｫｰｸ	2	[LFD090] INC.2-5
-	234A8-10501		FORK	ﾌｫｰｸ	2	[LFD092] INC.2-5
-	234A8-10581		FORK	ﾌｫｰｸ	2	[LFD100] INC.2-5
-	234A8-10511		FORK	ﾌｫｰｸ	2	[LFD107] INC.2-5
-	234A8-10591		FORK	ﾌｫｰｸ	2	[LFD110] INC.2-5
-	234A8-10601		FORK	ﾌｫｰｸ	2	[LFD120] INC.2-5
-	234A8-10521		FORK	ﾌｫｰｸ	2	[LFD122] INC.2-5
-	234A8-10611		FORK	ﾌｫｰｸ	2	[LFD130] INC.2-5
-	234A8-10531		FORK	ﾌｫｰｸ	2	[LFD137] INC.2-5
-	234A8-10621		FORK	ﾌｫｰｸ	2	[LFD140] INC.2-5
-	234A8-10631		FORK	ﾌｫｰｸ	2	[LFD150] INC.2-5
-	234A8-10541		FORK	ﾌｫｰｸ	2	[LFD152] INC.2-5
-	234A8-10641		FORK	ﾌｫｰｸ	2	[LFD160] INC.2-5
-	234A8-10551		FORK	ﾌｫｰｸ	2	[LFD167] INC.2-5
-	234A8-10652		FORK	ﾌｫｰｸ	2	[LFD170] INC.2-5
-	234A8-10662		FORK	ﾌｫｰｸ	2	[LFD180] INC.2-5
-	234A8-10562		FORK	ﾌｫｰｸ	2	[LFD182] INC.2-5
-	234A8-10672		FORK	ﾌｫｰｸ	2	[LFD190] INC.2-5
-	234A8-10682		FORK	ﾌｫｰｸ	2	[LFD200] INC.2-5
A1	214A8-11001		STOPPER-ASSY,FORK	ｽﾄｯﾊﾟｱｯｾﾝ	2	INC.2-5
2	214A8-12001		HEAD	ﾍｯﾄﾞ	2	

FIG.205 FORK [VM39A]

(M5028110) フォーク

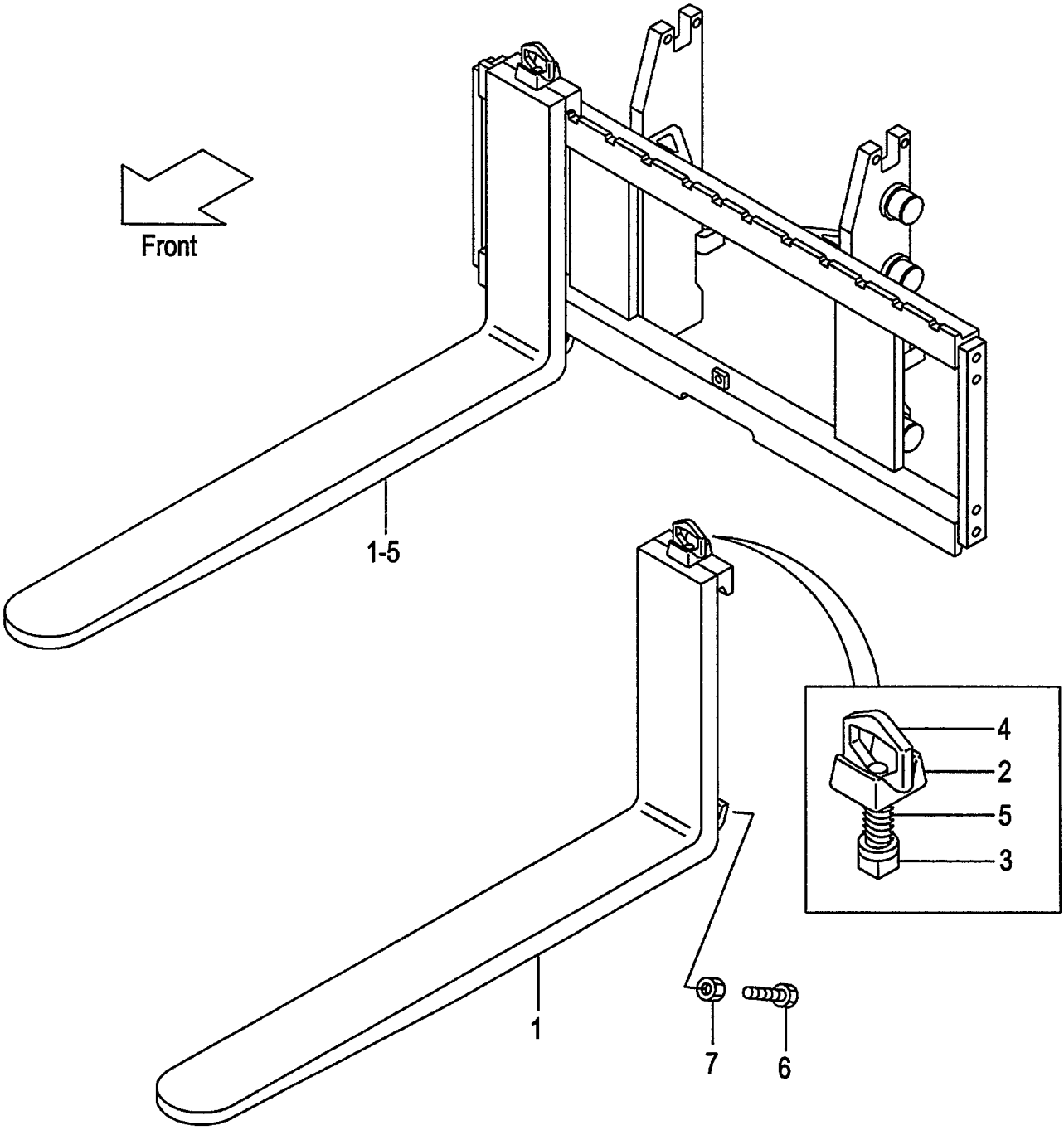

A:VM39A(2T)
B:VM39A(2.5T)

FIG.205
(M5028110)

Item No	Part No.	Mark	Description		Req'd	Remarks : Serial No.
3	214A8-12011		STOPPER	ｽﾄｯﾊﾟ	2	
4	214A8-12021		HANDLE	ﾊﾝﾄﾞﾙ	2	
5	214A8-12031		SPRING	ｽﾌﾟﾘﾝｸﾞ	2	
6	216G8-12101		BOLT	ﾎﾞﾙﾄ	4	[LFD]
7	01402-00010		NUT	ﾅｯﾄ	4	[LFD]

FIG.206 LIFT BRACKET [VM39A]

(M5028210) リフトブラケット

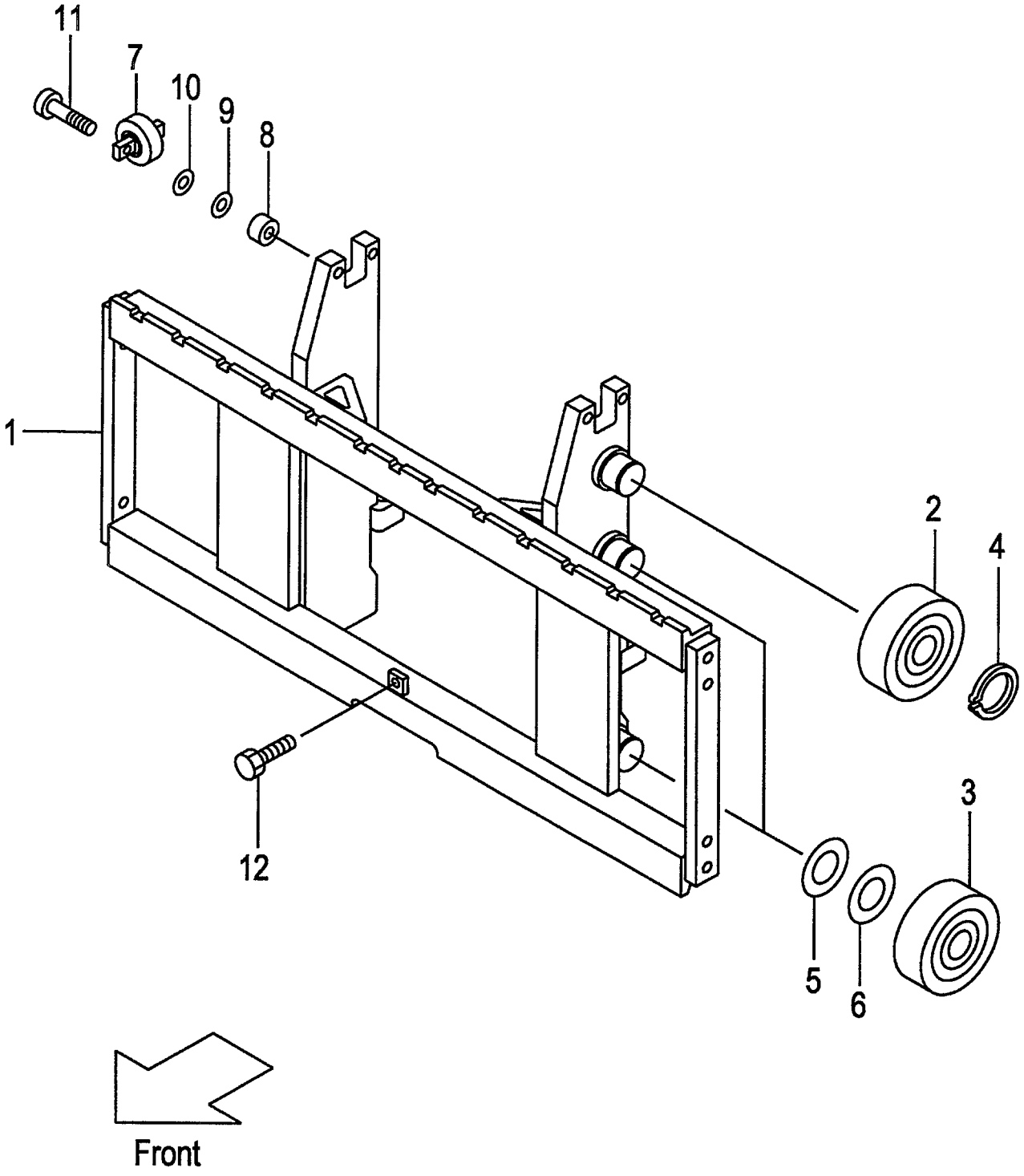

A:VM39A(2T)
B:VM39A(2.5T)

FIG.206
(M5028210)

Item No	Part No.	Mark	Description		Req'd	Remarks : Serial No.
1	239A8-20002		BRACKET,LIFT	ﾌﾞﾗｹｯﾄ	1	
2	277P8-22051		ROLLER,END	ﾛｰﾗ	2	
-	277P8-22061		ROLLER,END	ﾛｰﾗ	(2)	
-	577P3-74001		ROLLER,END	ﾛｰﾗ	2	[FC][CS35][FCS35][FCS45] [FCS55]
-	577P3-74011		ROLLER,END	ﾛｰﾗ	(2)	[FC][CS35][FCS35][FCS45] [FCS55]
3	277P8-22051		ROLLER,END	ﾛｰﾗ	4	
-	577P3-74001		ROLLER,END	ﾛｰﾗ	4	[FC][CS35][FCS35][FCS45] [FCS55]
-	277P8-22061		ROLLER,END	ﾛｰﾗ	(4)	
-	577P3-74011		ROLLER,END	ﾛｰﾗ	(4)	[FC][CS35][FCS35][FCS45] [FCS55]
4	02100-00045		RING,SNAP	ｽﾅｯﾌﾟﾘﾝｸﾞ	2	
5	277P8-22071		SHIM,T-0.5	ｼﾑ	5	
6	277P8-22081		SHIM,T-1.0	ｼﾑ	5	
7	23458-32052		ROLLER,SIDE	ﾛｰﾗ	2	
-	514A3-71701		ROLLER,SIDE	ﾛｰﾗ	2	[FC][CS35][FCS35][FCS45] [FCS55]
8	22548-34031		SPACER	ｽﾍﾟｰｻ	4	
9	22548-34051		SHIM,T-0.5	ｼﾑ	5	
10	22548-34061		SHIM,T-1.0	ｼﾑ	5	
11	01184-12050		BOLT & WASHER	ﾎﾞﾙﾄ&ﾜｯｼｬ	4	
-	01184-12040		BOLT & WASHER	ﾎﾞﾙﾄ&ﾜｯｼｬ	4	[FC][CS35][FCS35][FCS45] [FCS55]
12	01184-12025		BOLT	ﾎﾞﾙﾄ	1	

FIG.207 BACKREST [VM39A]

(M5028220) ﾊﾞｯｸﾚｽﾄ

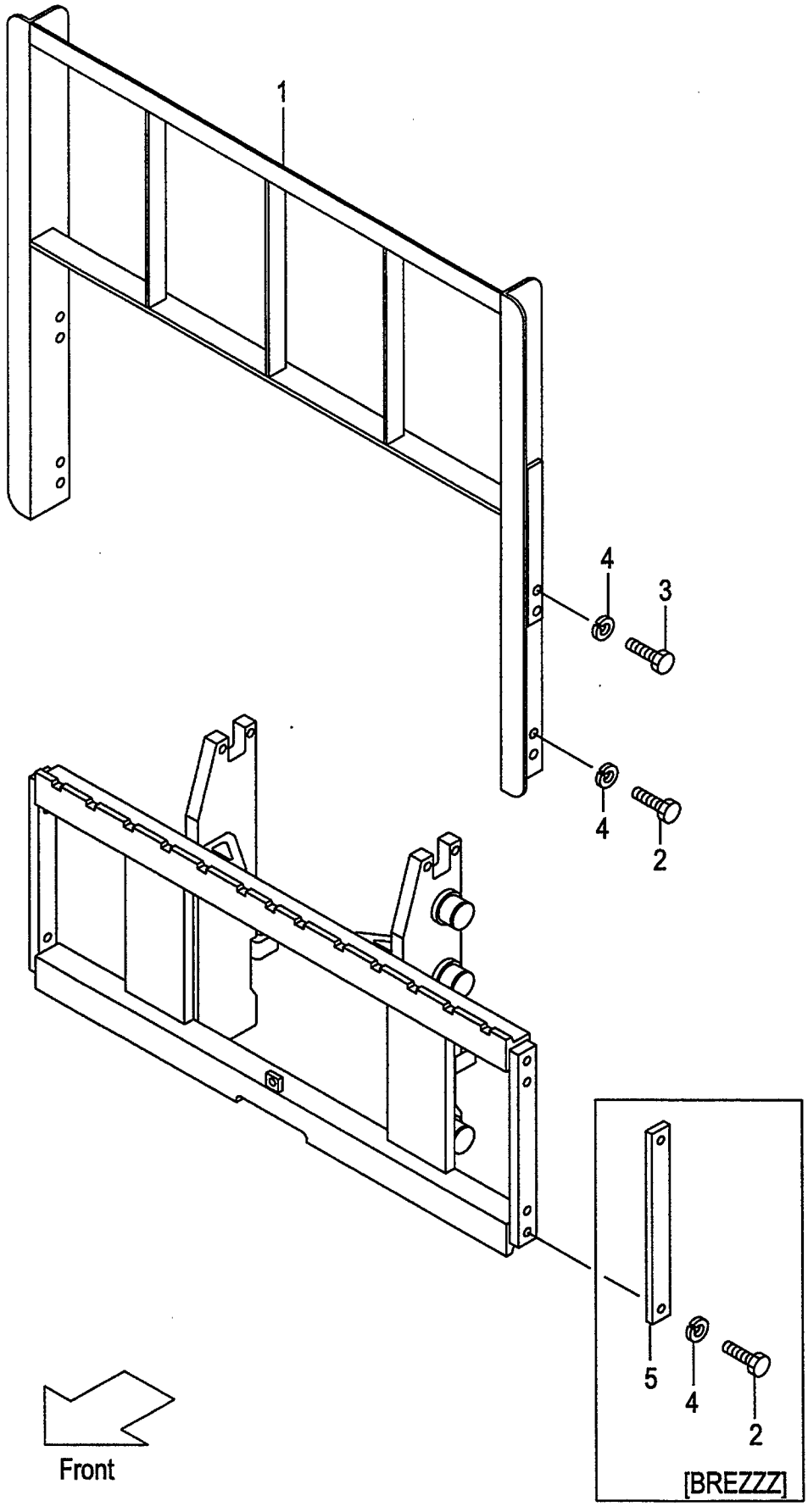

A:VM39A(2T)
B:VM39A(2.5T)

FIG.207
(M5028220)

Item No	Part No.	Mark	Description		Req'd	Remarks : Serial No.
1	234A8-22202		BACKREST	ﾊﾞｯｸﾚｽﾄ	1	
2	01100-14025		BOLT	ﾎﾞﾙﾄ	4	
-	01100-14025		BOLT	ﾎﾞﾙﾄ	4	[BREZZZ]
3	01100-14030		BOLT	ﾎﾞﾙﾄ	4	(WITHOUT BREZZZ)
4	02010-00014		WASHER	ﾜｯｼｬ	8	
-	02010-00014		WASHER	ﾜｯｼｬ	4	[BREZZZ]
5	23659-42161		PLATE,SIDE	ﾌﾟﾚｰﾄ	2	[BREZZZ]

FIG.208 MAST [VM39A]

(M5028310) マスト

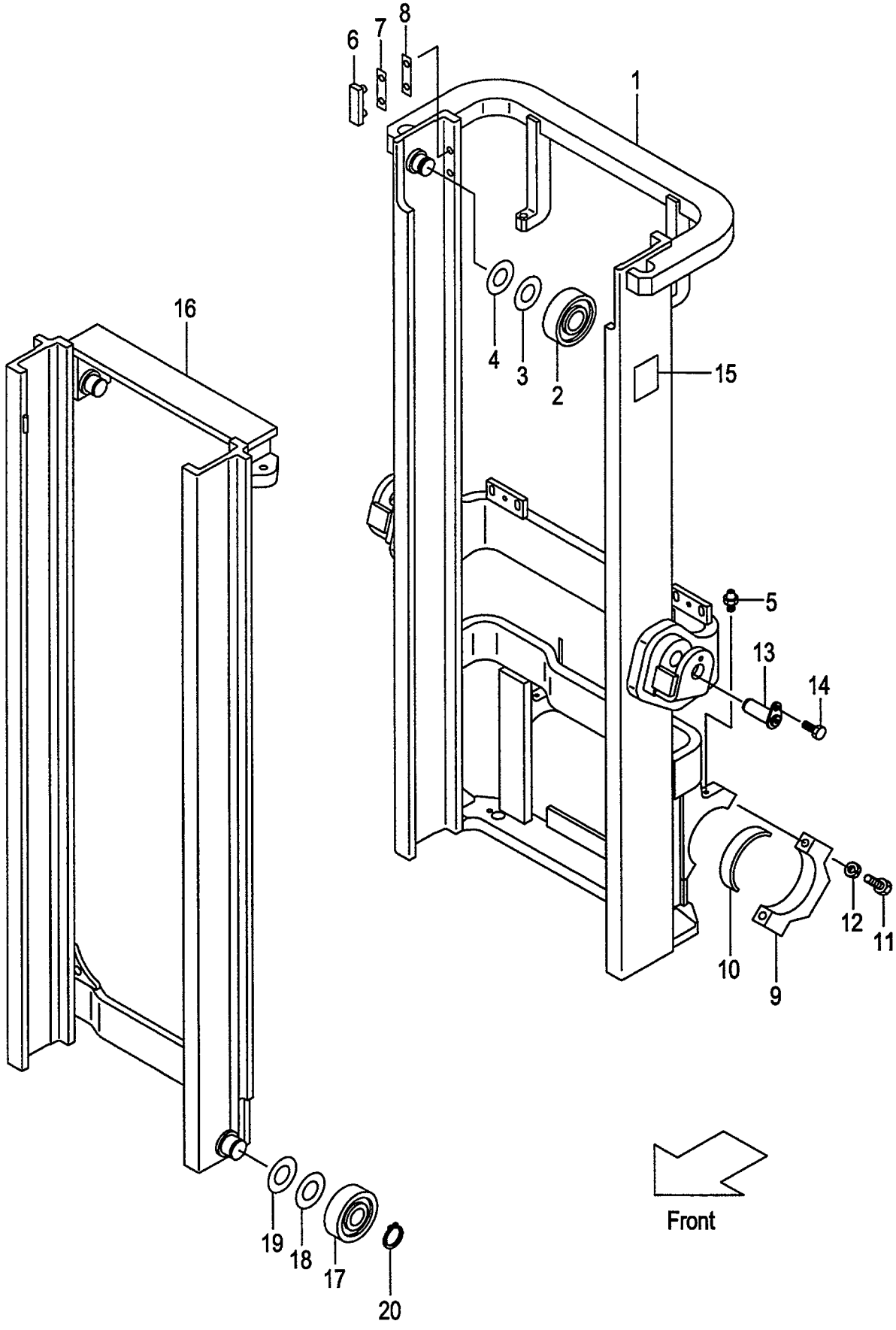

A:VM39A(2T)
B:VM39A(2.5T)

FIG.208
(M5028310)

Item No	Part No.	Mark	Description		Req'd	Remarks : Serial No.
1	239A8-30012		MAST,OUTER VM200	アウタマスト	1	
-	239A8-30022		MAST,OUTER VM225	アウタマスト	1	
-	239A8-30032		MAST,OUTER VM250	アウタマスト	1	
-	239A8-30042		MAST,OUTER VM270	アウタマスト	1	
-	239A8-30052		MAST,OUTER VM275	アウタマスト	1	
-	239A8-30002		MAST,OUTER VM300	アウタマスト	1	
-	239A8-30062		MAST,OUTER VM325	アウタマスト	1	
-	239A8-30072		MAST,OUTER VM330	アウタマスト	1	
-	239A8-30082		MAST,OUTER VM350	アウタマスト	1	
-	239A8-30092		MAST,OUTER VM366	アウタマスト	1	
-	239A8-30102		MAST,OUTER VM370	アウタマスト	1	
-	239A8-30112		MAST,OUTER VM375	アウタマスト	1	
-	239A8-30122		MAST,OUTER VM400	アウタマスト	1	
-	239A8-30132		MAST,OUTER VM425	アウタマスト	1	
-	239A8-30142		MAST,OUTER VM450	アウタマスト	1	
-	239A8-30152		MAST,OUTER VM475	アウタマスト	1	
-	239A8-30162		MAST,OUTER VM500	アウタマスト	1	
-	239A8-30172		MAST,OUTER VM550	アウタマスト	1	
-	239A8-30182		MAST,OUTER VM600	アウタマスト	1	
2	277P8-22051		ROLLER,END	ローラ	2	
-	577P3-74001		ROLLER,END	ローラ	2	[FC][CS35][FCS35][FCS45] [FCS55]
3	277P8-22071		SHIM	シム	12	
4	277P8-22081		SHIM	シム	12	
5	04901-00100		FITTING	フィッティング	2	
6	216G8-33401		SLIPPER	スリッパ	2	
7	216G8-33361		SHIM,T-0.5	シム	8	
8	216G8-33371		SHIM,T-1.0	シム	4	
9	22018-30065		CAP	キャップ	2	
10	214A8-02201		BUSHING	ブッシング	2	
11	01103-16065		BOLT	ボルト	4	
12	02011-00016		WASHER	ワッシャ	4	
13	272K8-52201		PIN	ピン	2	
14	216G8-52301		BOLT & WASHER	ボルト&ワッシャ	2	
15	23678-06002		PLATE,NAME	プレート	1	
16	239A8-30212		MAST,INNER VM200	インナマスト	1	
-	239A8-30222		MAST,INNER VM225	インナマスト	1	
-	239A8-30232		MAST,INNER VM250	インナマスト	1	
-	239A8-30242		MAST,INNER VM270	インナマスト	1	
-	239A8-30252		MAST,INNER VM275	インナマスト	1	
-	239A8-30202		MAST,INNER VM300	インナマスト	1	
-	239A8-30262		MAST,INNER VM325	インナマスト	1	
-	239A8-30272		MAST,INNER VM330	インナマスト	1	
-	239A8-30282		MAST,INNER VM350	インナマスト	1	
-	239A8-30292		MAST,INNER VM366	インナマスト	1	
-	239A8-30302		MAST,INNER VM370	インナマスト	1	
-	239A8-30312		MAST,INNER VM375	インナマスト	1	
-	239A8-30322		MAST,INNER VM400	インナマスト	1	
-	239A8-30332		MAST,INNER VM425	インナマスト	1	
-	239A8-30342		MAST,INNER VM450	インナマスト	1	

FIG.208 MAST [VM39A]

(M5028310) マスト

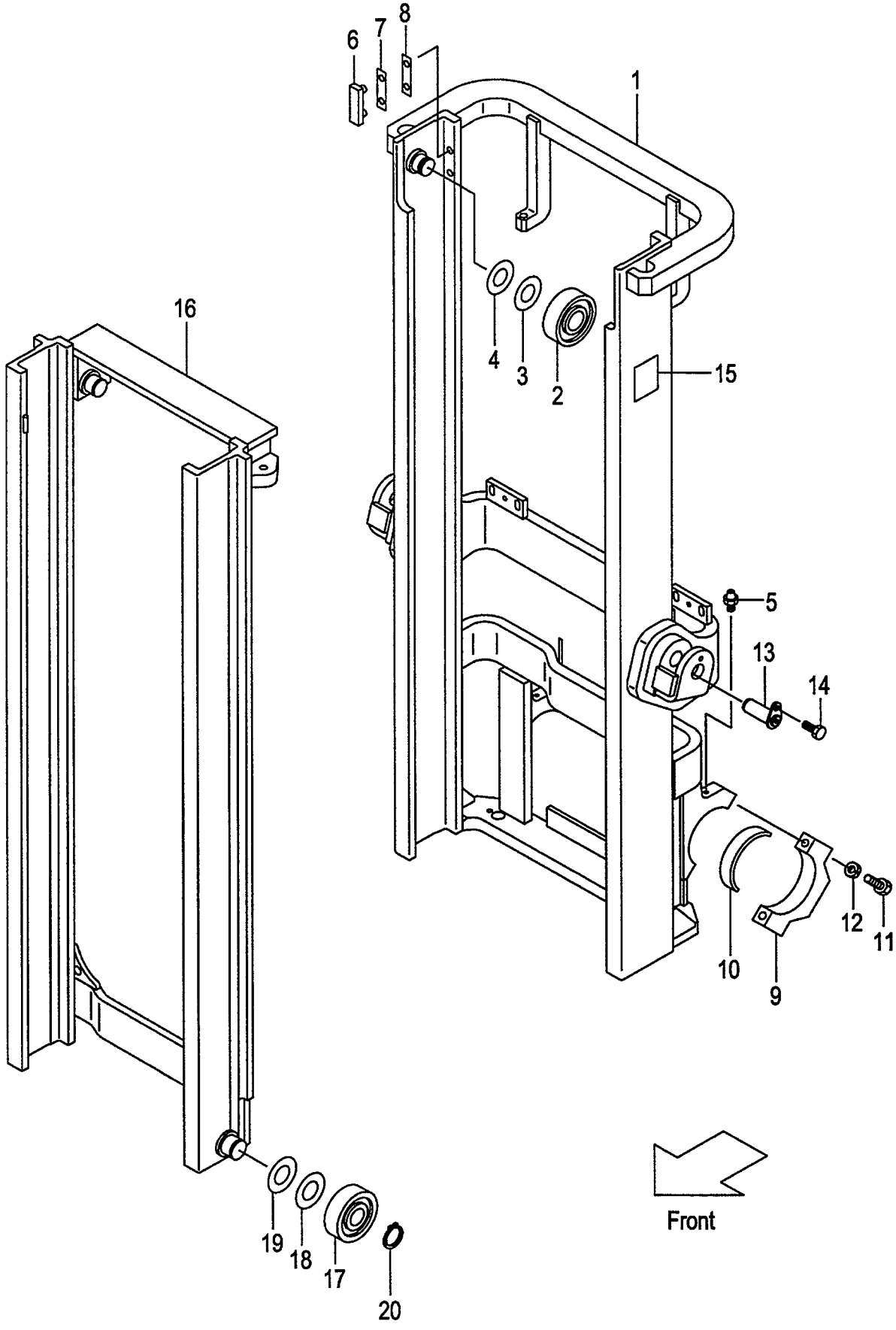

A:VM39A(2T)
B:VM39A(2.5T)

FIG.208
(M5028310)

Item No	Part No.	Mark	Description	Req'd	Remarks : Serial No.
-	239A8-30352		MAST,INNER VM475 インナマスト	1	
-	239A8-30362		MAST,INNER VM500 インナマスト	1	
-	239A8-30372		MAST,INNER VM550 インナマスト	1	
-	239A8-30382		MAST,INNER VM600 インナマスト	1	
17	277P8-22051		ROLLER,END ローラ	2	
-	577P3-74001		ROLLER,END ローラ	2	[FC][CS35][FCS35][FCS45] [FCS55]
-	277P8-22061		ROLLER,END ローラ	(2)	
-	577P3-74011		ROLLER,END ローラ	(2)	[FC][CS35][FCS35][FCS45] [FCS55]
18	277P8-22071		SHIM,T-0.5 シム	12	
19	277P8-22081		SHIM,T-1.0 シム	12	
20	09192-30044		RING,SNAP スナップリング	2	

FIG.209 LIFT CYLINDER [VM39A]

(M5028410) リフトシリンダ

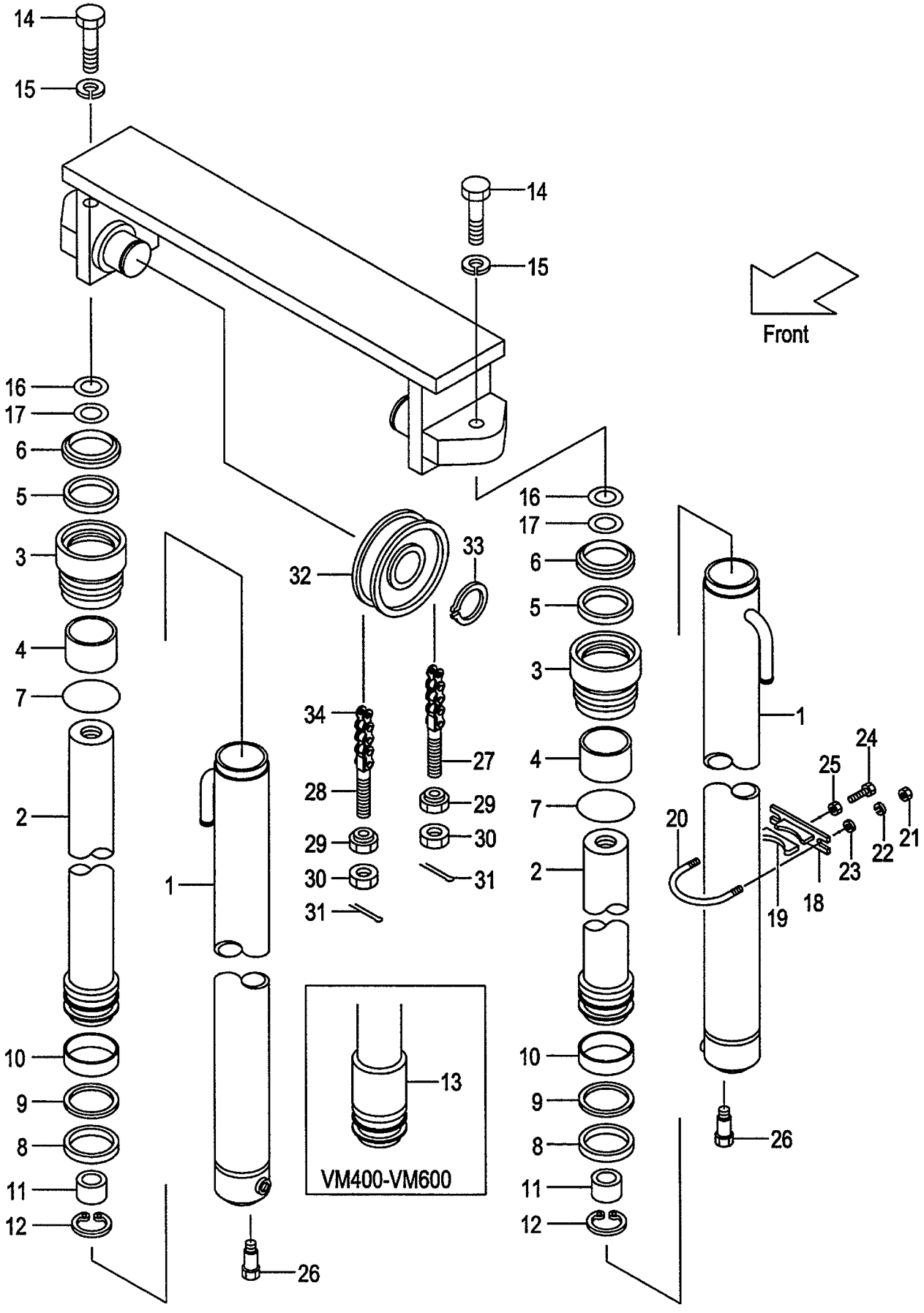

A:VM39A(2T)
B:VM39A(2.5T)

FIG.209
(M5028410)

Item No	Part No.	Mark	Description	Req'd	Remarks : Serial No.
A1	277P8-40011		CYL-ASSY,LIFT VM200 ﾘﾌﾄｼﾘﾝﾀﾞｱｯｾﾝ	2	INC.1-12
-	277P8-40021		CYL-ASSY,LIFT VM225 ﾘﾌﾄｼﾘﾝﾀﾞｱｯｾﾝ	2	INC.1-12
-	277P8-40031		CYL-ASSY,LIFT VM250 ﾘﾌﾄｼﾘﾝﾀﾞｱｯｾﾝ	2	INC.1-12
-	277P8-40041		CYL-ASSY,LIFT VM270 ﾘﾌﾄｼﾘﾝﾀﾞｱｯｾﾝ	2	INC.1-12
-	277P8-40051		CYL-ASSY,LIFT VM275 ﾘﾌﾄｼﾘﾝﾀﾞｱｯｾﾝ	2	INC.1-12
-	277P8-40001		CYL-ASSY,LIFT VM300 ﾘﾌﾄｼﾘﾝﾀﾞｱｯｾﾝ	2	INC.1-12
-	277P8-40061		CYL-ASSY,LIFT VM325 ﾘﾌﾄｼﾘﾝﾀﾞｱｯｾﾝ	2	INC.1-12
-	277P8-40071		CYL-ASSY,LIFT VM330 ﾘﾌﾄｼﾘﾝﾀﾞｱｯｾﾝ	2	INC.1-12
-	277P8-40081		CYL-ASSY,LIFT VM350 ﾘﾌﾄｼﾘﾝﾀﾞｱｯｾﾝ	2	INC.1-12
-	277P8-40091		CYL-ASSY,LIFT VM366 ﾘﾌﾄｼﾘﾝﾀﾞｱｯｾﾝ	2	INC.1-12
-	277P8-40101		CYL-ASSY,LIFT VM370 ﾘﾌﾄｼﾘﾝﾀﾞｱｯｾﾝ	2	INC.1-12
-	277P8-40111		CYL-ASSY,LIFT VM375 ﾘﾌﾄｼﾘﾝﾀﾞｱｯｾﾝ	2	INC.1-12
-	277P8-40121		CYL-ASSY,LIFT VM400 ﾘﾌﾄｼﾘﾝﾀﾞｱｯｾﾝ	2	INC.1-13
-	277P8-40131		CYL-ASSY,LIFT VM425 ﾘﾌﾄｼﾘﾝﾀﾞｱｯｾﾝ	2	INC.1-13
-	277P8-40141		CYL-ASSY,LIFT VM450 ﾘﾌﾄｼﾘﾝﾀﾞｱｯｾﾝ	2	INC.1-13
-	277P8-40151		CYL-ASSY,LIFT VM475 ﾘﾌﾄｼﾘﾝﾀﾞｱｯｾﾝ	2	INC.1-13
-	277P8-40161		CYL-ASSY,LIFT VM500 ﾘﾌﾄｼﾘﾝﾀﾞｱｯｾﾝ	2	INC.1-13
-	277P8-40171		CYL-ASSY,LIFT VM550 ﾘﾌﾄｼﾘﾝﾀﾞｱｯｾﾝ	2	INC.1-13
-	277P8-40181		CYL-ASSY,LIFT VM600 ﾘﾌﾄｼﾘﾝﾀﾞｱｯｾﾝ	2	INC.1-13
1	B-30697-51101		BODY,CYL VM200 ﾎﾞﾃﾞｨ	2	
-	B-30697-51201		BODY,CYL VM225 ﾎﾞﾃﾞｨ	2	
-	B-30697-51301		BODY,CYL VM250 ﾎﾞﾃﾞｨ	2	
-	B-30697-51401		BODY,CYL VM270 ﾎﾞﾃﾞｨ	2	
-	B-30697-51501		BODY,CYL VM275 ﾎﾞﾃﾞｨ	2	
-	B-30697-51601		BODY,CYL VM300 ﾎﾞﾃﾞｨ	2	
-	B-30697-51701		BODY,CYL VM325 ﾎﾞﾃﾞｨ	2	
-	B-30697-51801		BODY,CYL VM330 ﾎﾞﾃﾞｨ	2	
-	B-30697-51901		BODY,CYL VM350 ﾎﾞﾃﾞｨ	2	
-	B-30697-52001		BODY,CYL VM366 ﾎﾞﾃﾞｨ	2	
-	B-30697-52101		BODY,CYL VM370 ﾎﾞﾃﾞｨ	2	
-	B-30697-52201		BODY,CYL VM375 ﾎﾞﾃﾞｨ	2	
-	B-30697-52301		BODY,CYL VM400 ﾎﾞﾃﾞｨ	2	
-	B-30697-52401		BODY,CYL VM425 ﾎﾞﾃﾞｨ	2	
-	B-30697-52501		BODY,CYL VM450 ﾎﾞﾃﾞｨ	2	
-	B-30697-52601		BODY,CYL VM475 ﾎﾞﾃﾞｨ	2	
-	B-30697-52701		BODY,CYL VM500 ﾎﾞﾃﾞｨ	2	
-	B-30697-52801		BODY,CYL VM550 ﾎﾞﾃﾞｨ	2	
-	B-30697-52901		BODY,CYL VM600 ﾎﾞﾃﾞｨ	2	
2	B-30697-51102		ROD,PISTON VM200 ﾛｯﾄﾞ	2	
-	B-30697-51202		ROD,PISTON VM225 ﾛｯﾄﾞ	2	
-	B-30697-51302		ROD,PISTON VM250 ﾛｯﾄﾞ	2	
-	B-30697-51402		ROD,PISTON VM270 ﾛｯﾄﾞ	2	
-	B-30697-51502		ROD,PISTON VM275 ﾛｯﾄﾞ	2	
-	B-30697-51602		ROD,PISTON VM300 ﾛｯﾄﾞ	2	
-	B-30697-51702		ROD,PISTON VM325 ﾛｯﾄﾞ	2	
-	B-30697-51802		ROD,PISTON VM330 ﾛｯﾄﾞ	2	
-	B-30697-51902		ROD,PISTON VM350 ﾛｯﾄﾞ	2	
-	B-30697-52002		ROD,PISTON VM366 ﾛｯﾄﾞ	2	
-	B-30697-52102		ROD,PISTON VM370 ﾛｯﾄﾞ	2	
-	B-30697-52202		ROD,PISTON VM375 ﾛｯﾄﾞ	2	

FIG.209 LIFT CYLINDER [VM39A]

(M5028410) リフトシリンダ

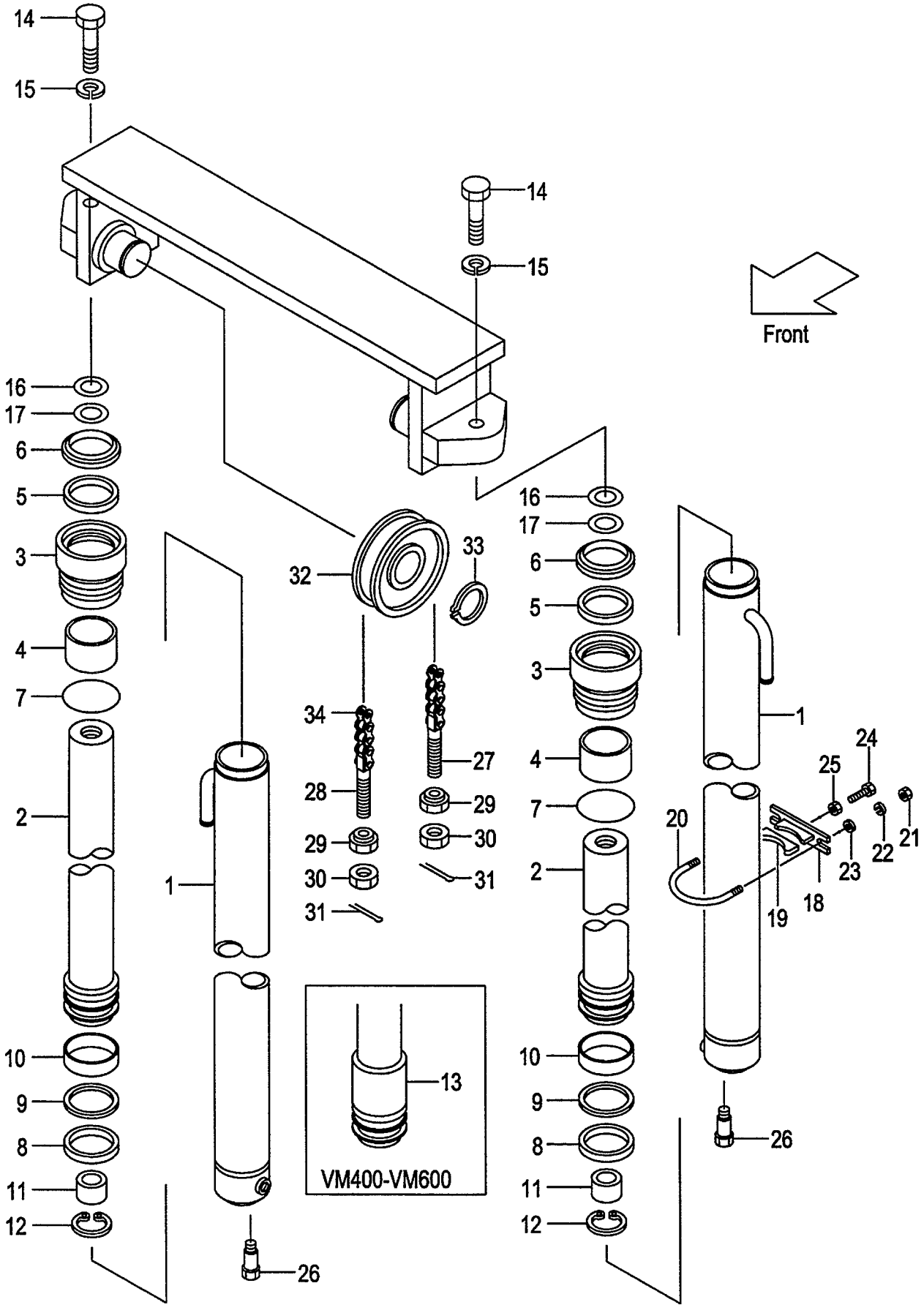

A:VM39A(2T)
B:VM39A(2.5T)

FIG.209
(M5028410)

Item No	Part No.	Mark	Description		Req'd	Remarks : Serial No.
-	B-30697-52302		ROD,PISTON VM400	ﾛｯﾄﾞ	2	
-	B-30697-52402		ROD,PISTON VM425	ﾛｯﾄﾞ	2	
-	B-30697-52502		ROD,PISTON VM450	ﾛｯﾄﾞ	2	
-	B-30697-52602		ROD,PISTON VM475	ﾛｯﾄﾞ	2	
-	B-30697-52702		ROD,PISTON VM500	ﾛｯﾄﾞ	2	
-	B-30697-52802		ROD,PISTON VM550	ﾛｯﾄﾞ	2	
-	B-30697-52902		ROD,PISTON VM600	ﾛｯﾄﾞ	2	
3	B-30121-50102	*	CAP	ｷｬｯﾌﾟ	2	
4	B-30131-40017	*	BUSHING	ﾌﾞｯｼﾝｸﾞ	2	
5	B-30961-04012	*	U-RING	Uﾘﾝｸﾞ	2	
6	B-30191-40025	*	RING,WIPER	ﾘﾝｸﾞ	2	
7	B-30161-91774	*	O-RING	Oﾘﾝｸﾞ	2	
8	B-30161-50046	*	U-RING	Uﾘﾝｸﾞ	2	
9	B-30461-50039	*	RING,BACK-UP	ﾘﾝｸﾞ	2	
10	B-30131-50018		BUSHING	ﾌﾞｯｼﾝｸﾞ	2	
11	B-30551-91003		RING	ﾘﾝｸﾞ	2	
12	B-30141-91049		RING,SNAP	ｽﾅｯﾌﾟﾘﾝｸﾞ	2	
13	B-30286-95303		SPACER VM400	ｽﾍﾟｰｻ	2	
-	B-30286-95303		SPACER VM425	ｽﾍﾟｰｻ	2	
-	B-30286-95303		SPACER VM450	ｽﾍﾟｰｻ	2	
-	B-30286-95303		SPACER VM475	ｽﾍﾟｰｻ	2	
-	B-30286-95303		SPACER VM500	ｽﾍﾟｰｻ	2	
-	B-30296-11903		SPACER VM550	ｽﾍﾟｰｻ	2	
-	B-30296-11903		SPACER VM600	ｽﾍﾟｰｻ	2	
14	01103-14040		BOLT	ﾎﾞﾙﾄ	2	
15	02011-00014		WASHER	ﾜｯｼｬ	2	
16	22517-40051		SHIM,T-0.2	ｼﾑ	4	
17	22717-40081		SHIM,T-0.5	ｼﾑ	4	
A2	215E8-42171		SUPPORT-ASSY	ｻﾎﾟｰﾄｱｯｾﾝ	2	[VM200-375] INC.18,19
-	215E8-42171		SUPPORT-ASSY	ｻﾎﾟｰﾄｱｯｾﾝ	4	[VM400-600] INC.18,19
18	215E8-42181		SUPPORT	ｻﾎﾟｰﾄ	2	[VM200-375]
-	215E8-42181		SUPPORT	ｻﾎﾟｰﾄ	4	[VM400-600]
19	24868-42111		RUBBER	ﾗﾊﾞｰ	2	[VM200-375]
-	24868-42111		RUBBER	ﾗﾊﾞｰ	4	[VM400-600]
20	234A8-42551		U-BOLT	Uﾎﾞﾙﾄ	2	[VM200-375]
-	234A8-42551		U-BOLT	Uﾎﾞﾙﾄ	4	[VM400-600]
21	234A8-42561		NUT	ﾅｯﾄ	4	[VM200-375]
-	234A8-42561		NUT	ﾅｯﾄ	8	[VM400-600]
22	02010-20010		WASHER	ﾜｯｼｬ	4	[VM200-375]
-	02010-20010		WASHER	ﾜｯｼｬ	8	[VM400-600]
23	02000-20010		WASHER	ﾜｯｼｬ	4	[VM200-375]
-	02000-20010		WASHER	ﾜｯｼｬ	8	[VM400-600]
24	232A8-42201		BOLT	ﾎﾞﾙﾄ	2	[VM200-375]
-	232A8-42201		BOLT	ﾎﾞﾙﾄ	4	[VM400-600]
25	234A8-42571		NUT	ﾅｯﾄ	2	[VM200-375]
-	234A8-42571		NUT	ﾅｯﾄ	4	[VM400-600]
26	214A8-42661		BOLT	ﾎﾞﾙﾄ	2	
27	23500-82001		PIN,ANCHOR	ﾋﾟﾝ	2	
-	23658-42531		PIN,ANCHOR	ﾋﾟﾝ	2	[FC][FCS35][FCS45][FCS55]
28	52672-72231		PIN,ANCHOR	ﾋﾟﾝ	2	

FIG.209 LIFT CYLINDER [VM39A]

(M5028410) リフトシリンダ

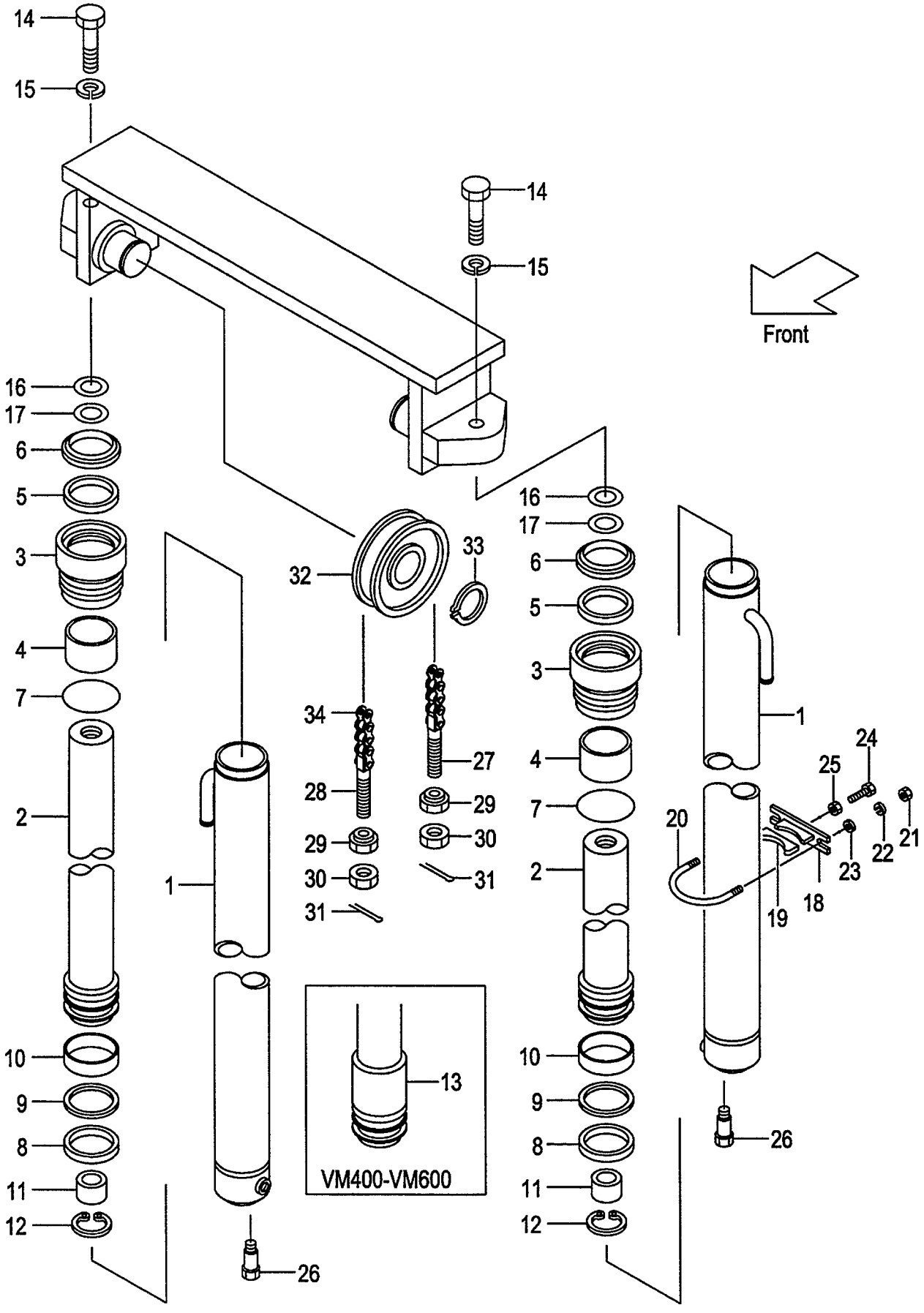

A:VM39A(2T)
B:VM39A(2.5T)

Item No	Part No.	Mark	Description		Req'd	Remarks : Serial No.
-	22218-42111		PIN,ANCHOR	ﾋﾟﾝ	2	[FC][FCS35][FCS45][FCS55]
29	22218-40191		NUT	ﾅｯﾄ	4	
30	01400-00018		NUT	ﾅｯﾄ	4	
31	02200-03030		PIN	ﾋﾟﾝ	4	
32	234A8-43501		SHEAVE	ｼｰﾌﾞ	2	
-	22208-40031		SHEAVE	ｼｰﾌﾞ	2	[FC][FCS35][FCS45][FCS55]
33	02100-00040		RING,SNAP	ｽﾅｯﾌﾟﾘﾝｸﾞ	2	
34	22679-45711		CHAIN,LEAF VM200	ﾁｪｰﾝ	2	
-	22679-45771		CHAIN,LEAF VM225	ﾁｪｰﾝ	2	
-	22679-45831		CHAIN,LEAF VM250	ﾁｪｰﾝ	2	
-	22679-45891		CHAIN,LEAF VM270	ﾁｪｰﾝ	2	
-	22679-45911		CHAIN,LEAF VM275	ﾁｪｰﾝ	2	
-	22679-45971		CHAIN,LEAF VM300	ﾁｪｰﾝ	2	
-	22679-46031		CHAIN,LEAF VM325	ﾁｪｰﾝ	2	
-	22679-46051		CHAIN,LEAF VM330	ﾁｪｰﾝ	2	
-	22679-46091		CHAIN,LEAF VM350	ﾁｪｰﾝ	2	
-	22679-46151		CHAIN,LEAF VM366	ﾁｪｰﾝ	2	
-	22679-46151		CHAIN,LEAF VM370	ﾁｪｰﾝ	2	
-	22679-46171		CHAIN,LEAF VM375	ﾁｪｰﾝ	2	
-	22679-46251		CHAIN,LEAF VM400	ﾁｪｰﾝ	2	
-	22679-46331		CHAIN,LEAF VM425	ﾁｪｰﾝ	2	
-	22679-46391		CHAIN,LEAF VM450	ﾁｪｰﾝ	2	
-	22679-46451		CHAIN,LEAF VM475	ﾁｪｰﾝ	2	
-	22679-46511		CHAIN,LEAF VM500	ﾁｪｰﾝ	2	
-	22679-46671		CHAIN,LEAF VM550	ﾁｪｰﾝ	2	
-	22679-46811		CHAIN,LEAF VM600	ﾁｪｰﾝ	2	
-	09001-10043		CHAIN,ROLLER VM200	ﾁｪｰﾝ	2	[FC][FCS35][FCS45][FCS55]
-	09001-10047		CHAIN,ROLLER VM225	ﾁｪｰﾝ	2	[FC][FCS35][FCS45][FCS55]
-	09001-10051		CHAIN,ROLLER VM250	ﾁｪｰﾝ	2	[FC][FCS35][FCS45][FCS55]
-	09001-10053		CHAIN,ROLLER VM270	ﾁｪｰﾝ	2	[FC][FCS35][FCS45][FCS55]
-	09001-10055		CHAIN,ROLLER VM275	ﾁｪｰﾝ	2	[FC][FCS35][FCS45][FCS55]
-	09001-10059		CHAIN,ROLLER VM300	ﾁｪｰﾝ	2	[FC][FCS35][FCS45][FCS55]
-	09001-10063		CHAIN,ROLLER VM325	ﾁｪｰﾝ	2	[FC][FCS35][FCS45][FCS55]
-	09001-10063		CHAIN,ROLLER VM330	ﾁｪｰﾝ	2	[FC][FCS35][FCS45][FCS55]
-	09001-10067		CHAIN,ROLLER VM350	ﾁｪｰﾝ	2	[FC][FCS35][FCS45][FCS55]
-	09001-10069		CHAIN,ROLLER VM366	ﾁｪｰﾝ	2	[FC][FCS35][FCS45][FCS55]
-	09001-10069		CHAIN,ROLLER VM370	ﾁｪｰﾝ	2	[FC][FCS35][FCS45][FCS55]
-	09001-10071		CHAIN,ROLLER VM375	ﾁｪｰﾝ	2	[FC][FCS35][FCS45][FCS55]
-	09001-10075		CHAIN,ROLLER VM400	ﾁｪｰﾝ	2	[FC][FCS35][FCS45][FCS55]
-	09001-10079		CHAIN,ROLLER VM425	ﾁｪｰﾝ	2	[FC][FCS35][FCS45][FCS55]
-	09001-10083		CHAIN,ROLLER VM450	ﾁｪｰﾝ	2	[FC][FCS35][FCS45][FCS55]
-	09001-10087		CHAIN,ROLLER VM475	ﾁｪｰﾝ	2	[FC][FCS35][FCS45][FCS55]
-	09001-10091		CHAIN,ROLLER VM500	ﾁｪｰﾝ	2	[FC][FCS35][FCS45][FCS55]
-	09001-10101		CHAIN,ROLLER VM550	ﾁｪｰﾝ	2	[FC][FCS35][FCS45][FCS55]
-	09001-10109		CHAIN,ROLLER VM600	ﾁｪｰﾝ	2	[FC][FCS35][FCS45][FCS55]
K1	B-3050B-00119		KIT,CAP	ｷｬｯﾌﾟｷｯﾄ	2	INC.3,4
K2	B-3050A-00093		KIT,REPAIR	ﾘﾍﾟｱｷｯﾄ	2	INC.5-9

FIG.210 MAST PIPING [VM39A]

(M5028420) マストパイピング

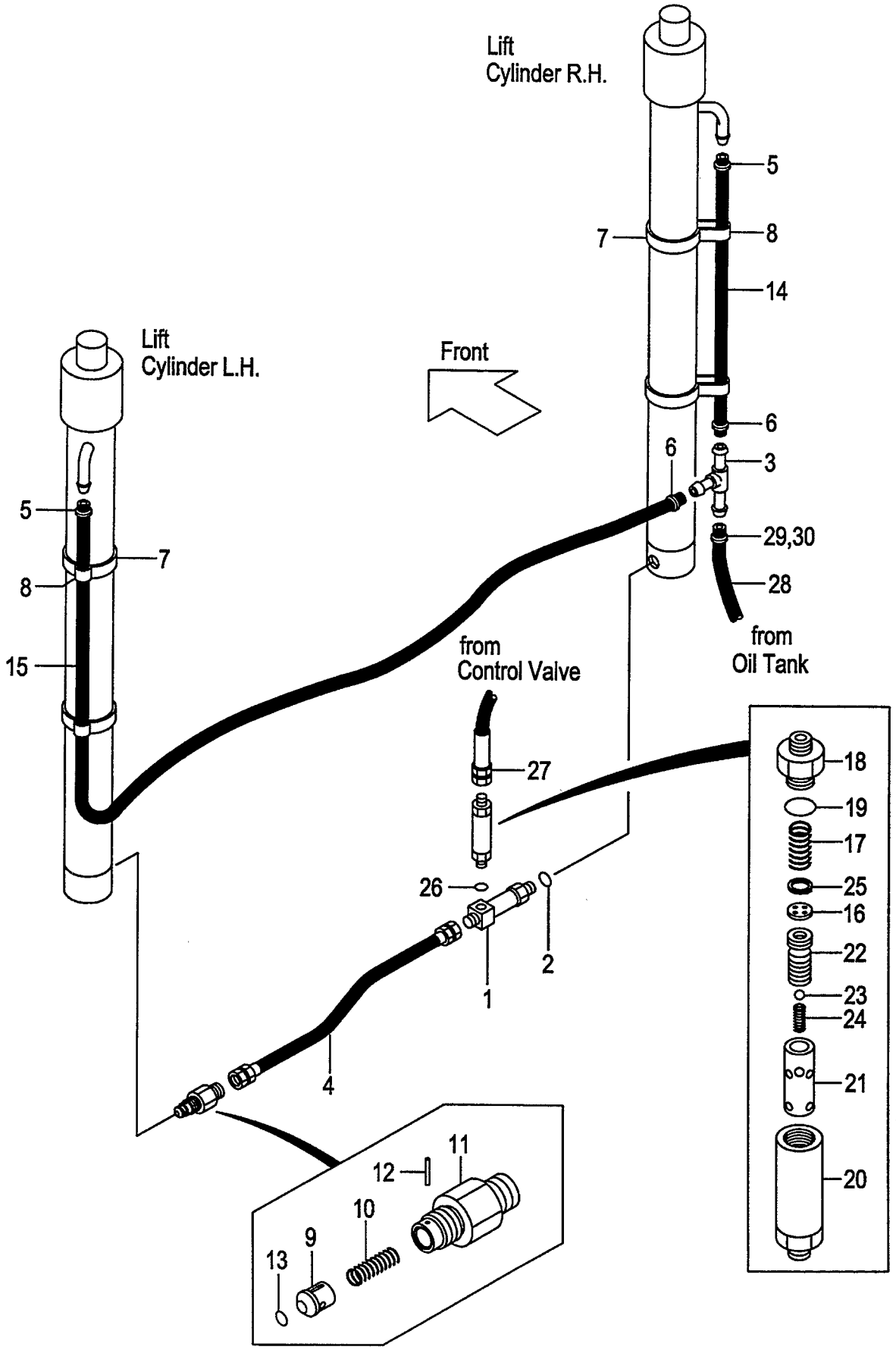

A:VM39A(2T)
B:VM39A(2.5T)

FIG.210
(M5028420)

Item No	Part No.	Mark	Description		Req'd	Remarks : Serial No.
A1	234A8-41101		THREE-WAY-ASSY	ｽﾘｰｳｪｲｱｯｾﾝ	1	INC.1,2
1	NO PART NO.	#	THREE-WAY	ｽﾘｰｳｴｲ	1	
2	03320-00140		O-RING	Oﾘﾝｸﾞ	1	
3	23679-45051		THREE-WAY	ｽﾘｰｳｴｲ	1	
-	53675-55051		THREE-WAY	ｽﾘｰｳｴｲ	1	[FC][RTL]
4	234A8-02201		HOSE	ﾎｰｽ	1	
5	04911-00018		CLIP	ｸﾘｯﾌﾟ	2	
-	24329-46201		CLIP	ｸﾘｯﾌﾟ	2	[FC][RTL]
6	04911-00018		CLIP	ｸﾘｯﾌﾟ	2	
-	04911-00021		CLIP	ｸﾘｯﾌﾟ	2	[FC][RTL]
7	04913-21380		BAND	ﾊﾞﾝﾄﾞ	4	
8	23678-42401		BAND	ﾊﾞﾝﾄﾞ	4	
-	53675-54101		BAND	ﾊﾞﾝﾄﾞ	4	[FC][RTL]
A2	234A8-40701		VALVE-ASSY,CUT	ｶｯﾄﾊﾞﾙﾌﾞｱｯｾﾝ	1	INC.9-13
9	234A8-42602		PISTON	ﾋﾟｽﾄﾝ	1	
10	234A8-42611		SPRING	ｽﾌﾟﾘﾝｸﾞ	1	
11	234A8-42622		NIPPLE	ﾆｯﾌﾟﾙ	1	
12	02270-01014		PIN	ﾋﾟﾝ	1	
13	03320-00140		O-RING	Oﾘﾝｸﾞ	1	
14	23678-40060		HOSE,RH VM200	ﾎｰｽ	1	
-	23678-40070		HOSE,RH VM225	ﾎｰｽ	1	
-	23678-40085		HOSE,RH VM250	ﾎｰｽ	1	
-	23678-40095		HOSE,RH VM270	ﾎｰｽ	1	
-	23678-40095		HOSE,RH VM275	ﾎｰｽ	1	
-	23678-40110		HOSE,RH VM300	ﾎｰｽ	1	
-	23678-40120		HOSE,RH VM325	ﾎｰｽ	1	
-	23678-40125		HOSE,RH VM330	ﾎｰｽ	1	
-	23678-40135		HOSE,RH VM350	ﾎｰｽ	1	
-	23678-40145		HOSE,RH VM366	ﾎｰｽ	1	
-	23678-40145		HOSE,RH VM370	ﾎｰｽ	1	
-	23678-40145		HOSE,RH VM375	ﾎｰｽ	1	
-	23678-40165		HOSE,RH VM400	ﾎｰｽ	1	
-	23678-40175		HOSE,RH VM425	ﾎｰｽ	1	
-	23678-40190		HOSE,RH VM450	ﾎｰｽ	1	
-	23678-40200		HOSE,RH VM475	ﾎｰｽ	1	
-	23678-40215		HOSE,RH VM500	ﾎｰｽ	1	
-	23678-40245		HOSE,RH VM550	ﾎｰｽ	1	
-	23678-40270		HOSE,RH VM600	ﾎｰｽ	1	
-	04710-04060		HOSE,RH VM200	ﾎｰｽ	1	[FC][RTL]
-	04710-04070		HOSE,RH VM225	ﾎｰｽ	1	[FC][RTL]
-	04710-04085		HOSE,RH VM250	ﾎｰｽ	1	[FC][RTL]
-	04710-04095		HOSE,RH VM270	ﾎｰｽ	1	[FC][RTL]
-	04710-04095		HOSE,RH VM275	ﾎｰｽ	1	[FC][RTL]
-	04710-04110		HOSE,RH VM300	ﾎｰｽ	1	[FC][RTL]
-	04710-04120		HOSE,RH VM325	ﾎｰｽ	1	[FC][RTL]
-	04710-04125		HOSE,RH VM330	ﾎｰｽ	1	[FC][RTL]
-	04710-04135		HOSE,RH VM350	ﾎｰｽ	1	[FC][RTL]
-	04710-04145		HOSE,RH VM366	ﾎｰｽ	1	[FC][RTL]
-	04710-04145		HOSE,RH VM370	ﾎｰｽ	1	[FC][RTL]
-	04710-04145		HOSE,RH VM375	ﾎｰｽ	1	[FC][RTL]

FIG.210 MAST PIPING [VM39A]

(M5028420) マストパイピング

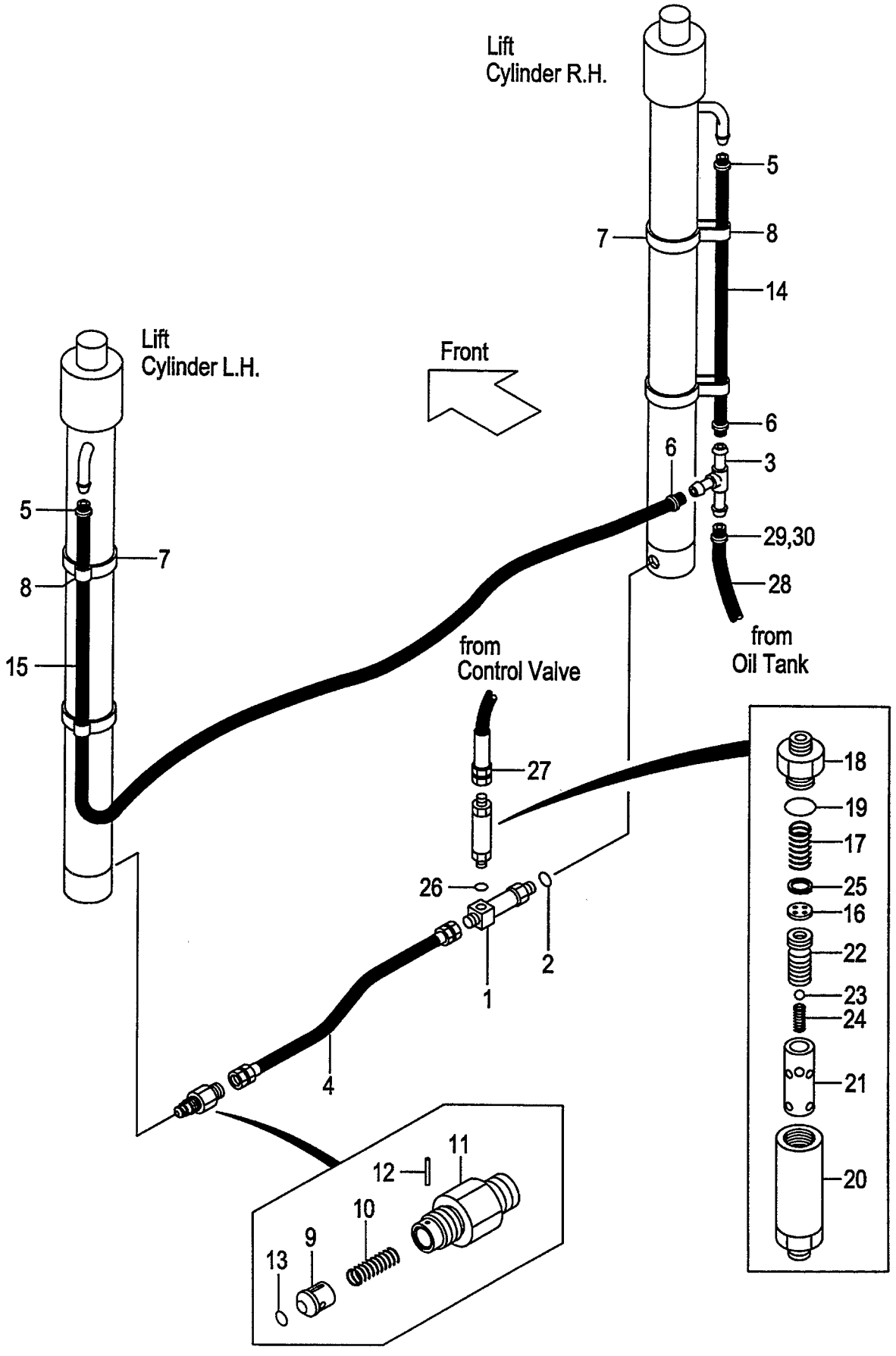

A:VM39A(2T)
B:VM39A(2.5T)

FIG.210
(M5028420)

Item No	Part No.	Mark	Description		Req'd	Remarks : Serial No.
-	04710-04165		HOSE,RH VM400	ﾎｰｽ	1	[FC][RTL]
-	04710-04175		HOSE,RH VM425	ﾎｰｽ	1	[FC][RTL]
-	04710-04190		HOSE,RH VM450	ﾎｰｽ	1	[FC][RTL]
-	04710-04200		HOSE,RH VM475	ﾎｰｽ	1	[FC][RTL]
-	04710-04215		HOSE,RH VM500	ﾎｰｽ	1	[FC][RTL]
-	04710-04245		HOSE,RH VM550	ﾎｰｽ	1	[FC][RTL]
-	04710-04270		HOSE,RH VM600	ﾎｰｽ	1	[FC][RTL]
15	23678-40125		HOSE,LH VM200	ﾎｰｽ	1	
-	23678-40145		HOSE,LH VM225	ﾎｰｽ	1	
-	23678-40150		HOSE,LH VM250	ﾎｰｽ	1	
-	23678-40160		HOSE,LH VM270	ﾎｰｽ	1	
-	23678-40160		HOSE,LH VM275	ﾎｰｽ	1	
-	23678-40170		HOSE,LH VM300	ﾎｰｽ	1	
-	23678-40185		HOSE,LH VM325	ﾎｰｽ	1	
-	23678-40190		HOSE,LH VM330	ﾎｰｽ	1	
-	23678-40200		HOSE,LH VM350	ﾎｰｽ	1	
-	23678-40210		HOSE,LH VM366	ﾎｰｽ	1	
-	23678-40210		HOSE,LH VM370	ﾎｰｽ	1	
-	23678-40210		HOSE,LH VM375	ﾎｰｽ	1	
-	23678-40230		HOSE,LH VM400	ﾎｰｽ	1	
-	23678-40240		HOSE,LH VM425	ﾎｰｽ	1	
-	23678-40255		HOSE,LH VM450	ﾎｰｽ	1	
-	23678-40265		HOSE,LH VM475	ﾎｰｽ	1	
-	23678-40280		HOSE,LH VM500	ﾎｰｽ	1	
-	23678-40310		HOSE,LH VM550	ﾎｰｽ	1	
-	23678-40335		HOSE,LH VM600	ﾎｰｽ	1	
-	04710-04125		HOSE,LH VM200	ﾎｰｽ	1	[FC][RTL]
-	04710-04145		HOSE,LH VM225	ﾎｰｽ	1	[FC][RTL]
-	04710-04150		HOSE,LH VM250	ﾎｰｽ	1	[FC][RTL]
-	04710-04160		HOSE,LH VM270	ﾎｰｽ	1	[FC][RTL]
-	04710-04160		HOSE,LH VM275	ﾎｰｽ	1	[FC][RTL]
-	04710-04170		HOSE,LH VM300	ﾎｰｽ	1	[FC][RTL]
-	04710-04185		HOSE,LH VM325	ﾎｰｽ	1	[FC][RTL]
-	04710-04190		HOSE,LH VM330	ﾎｰｽ	1	[FC][RTL]
-	04710-04200		HOSE,LH VM350	ﾎｰｽ	1	[FC][RTL]
-	04710-04210		HOSE,LH VM366	ﾎｰｽ	1	[FC][RTL]
-	04710-04210		HOSE,LH VM370	ﾎｰｽ	1	[FC][RTL]
-	04710-04210		HOSE,LH VM375	ﾎｰｽ	1	[FC][RTL]
-	04710-04230		HOSE,LH VM400	ﾎｰｽ	1	[FC][RTL]
-	04710-04240		HOSE,LH VM425	ﾎｰｽ	1	[FC][RTL]
-	04710-04255		HOSE,LH VM450	ﾎｰｽ	1	[FC][RTL]
-	04710-04265		HOSE,LH VM475	ﾎｰｽ	1	[FC][RTL]
-	04710-04280		HOSE,LH VM500	ﾎｰｽ	1	[FC][RTL]
-	04710-04310		HOSE,LH VM550	ﾎｰｽ	1	[FC][RTL]
-	04710-04335		HOSE,LH VM600	ﾎｰｽ	1	[FC][RTL]
A3	234A8-41001		REGURATOR-ASSY,FLOW	ﾚｷﾞｭﾚｰﾀｱｯｾﾝ	1	INC.16-25
16	NO PART NO.	#	PLATE	ﾌﾟﾚｰﾄ	1	
17	27979-43101		SPRING	ｽﾌﾟﾘﾝｸﾞ	1	
18	NO PART NO.	#	NIPPLE	ﾆｯﾌﾟﾙ	1	
19	03320-00280		O-RING	Oﾘﾝｸﾞ	1	

FIG.210 MAST PIPING [VM39A]

(M5028420) マストパイピング

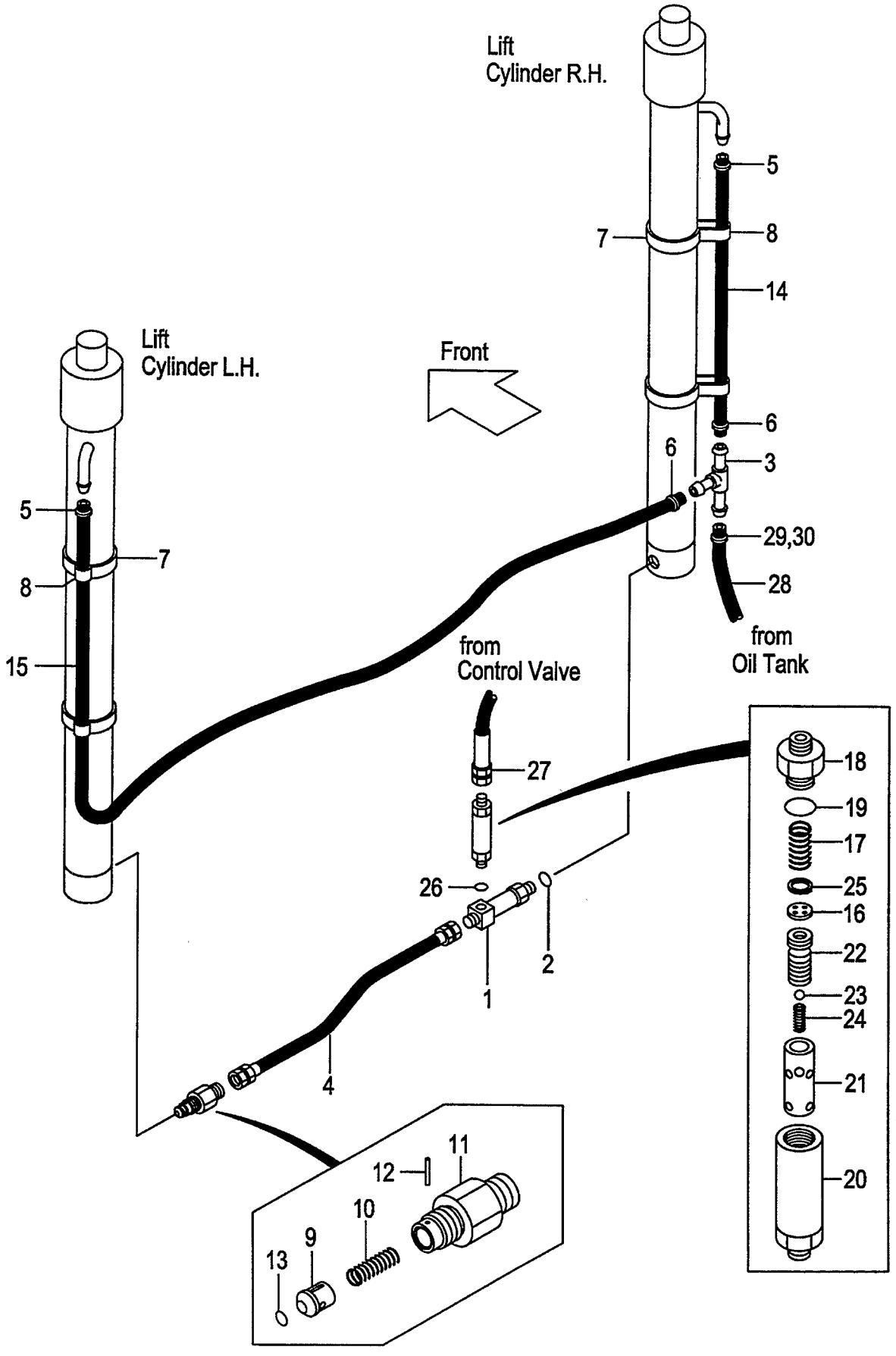

A:VM39A(2T)
B:VM39A(2.5T)

FIG.210
(M5028420)

Item No	Part No.	Mark	Description		Req'd	Remarks : Serial No.
20	NO PART NO.	#	CASE	ｹｰｽ	1	
21	NO PART NO.	#	SLEEVE	ｽﾘｰﾌﾞ	1	
22	NO PART NO.	#	PISTON	ﾋﾟｽﾄﾝ	1	
23	24459-42951		BALL,NYLON	ﾎﾞｰﾙ	1	
24	214A8-44151		SPRING	ｽﾌﾟﾘﾝｸﾞ	1	
25	02110-00018		RING,SNAP	ｽﾅｯﾌﾟﾘﾝｸﾞ	1	
26	03320-00180		O-RING	Oﾘﾝｸﾞ	1	
27	239A8-42001		HOSE	ﾎｰｽ	1	
28	23678-40110		HOSE	ﾎｰｽ	1	
-	04710-04125		HOSE	ﾎｰｽ	1	[FC][RTL]
29	04911-00018		CLIP	ｸﾘｯﾌﾟ	1	
-	04911-00021		CLIP	ｸﾘｯﾌﾟ	1	[FC][RTL]
30	04914-00016		CLIP	ｸﾘｯﾌﾟ	1	
-	04911-00021		CLIP	ｸﾘｯﾌﾟ	1	[FC][RTL]

FIG.211 FORK [VFM39A]

(M5028130) フォーク

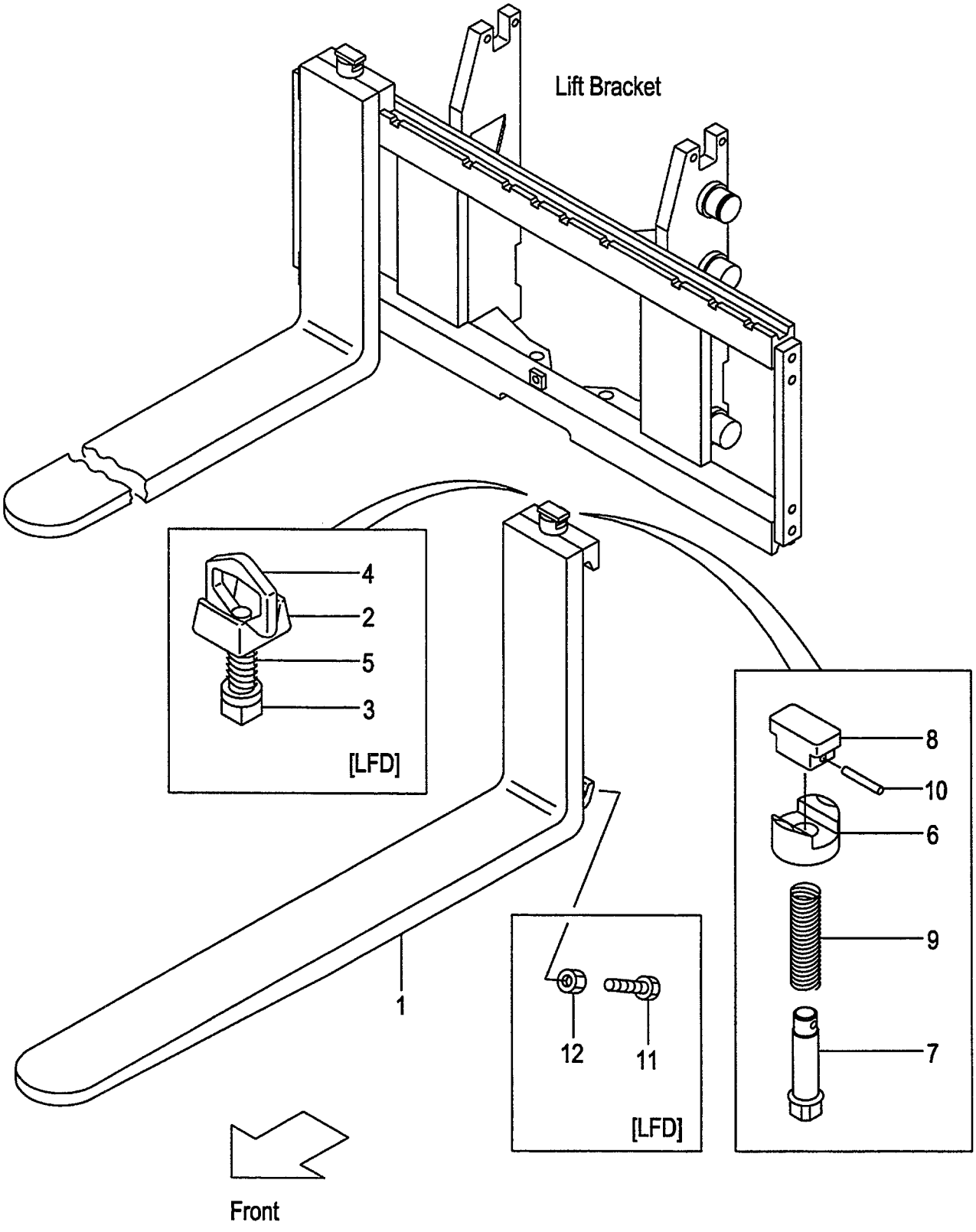

A:VFM39A(2T)
B:VFM39A(2.5T)

FIG.211
(M5028130)

Item No	Part No.	Mark	Description		Req'd	Remarks : Serial No.
1	231A8-10101		FORK	フォーク	2	A (L=920)INC.6-10
-	214A8-10512		FORK	フォーク	2	B (L=1070)INC.6-10
-	214A8-10512		FORK	フォーク	2	[EX]INC.6-10
-	LB24H8-10131		FORK	フォーク	2	(L=1100)(EU PRODUCT ONLY) INC.6-10
-	231A8-10171		FORK	フォーク	2	A [LF090]INC.6-10
-	231F8-10571		FORK	フォーク	2	B [LF090]INC.6-10
-	231A8-10101		FORK	フォーク	2	A [LF092]INC.6-10
-	231F8-10501		FORK	フォーク	2	B [LF092]INC.6-10
-	214A8-10582		FORK	フォーク	2	[LF100]INC.6-10
-	214A8-10512		FORK	フォーク	2	[LF107]INC.6-10
-	214A8-10592		FORK	フォーク	2	[LF110]INC.6-10
-	214A8-10602		FORK	フォーク	2	[LF120]INC.6-10
-	214A8-10522		FORK	フォーク	2	[LF122]INC.6-10
-	214A8-10612		FORK	フォーク	2	[LF130]INC.6-10
-	214A8-10532		FORK	フォーク	2	[LF137]INC.6-10
-	214A8-10622		FORK	フォーク	2	[LF140]INC.6-10
-	214A8-10632		FORK	フォーク	2	[LF150]INC.6-10
-	214A8-10542		FORK	フォーク	2	[LF152]INC.6-10
-	214A8-10642		FORK	フォーク	2	[LF160]INC.6-10
-	214A8-10552		FORK	フォーク	2	[LF167]INC.6-10
-	214A8-10653		FORK	フォーク	2	[LF170]INC.6-10
-	214A8-10663		FORK	フォーク	2	[LF180]INC.6-10
-	214A8-10563		FORK	フォーク	2	[LF182]INC.6-10
-	214A8-10673		FORK	フォーク	2	[LF190]INC.6-10
-	214A8-10683		FORK	フォーク	2	[LF200]INC.6-10
-	234A8-10571		FORK	フォーク	2	[LFD090]INC.2-5
-	234A8-10501		FORK	フォーク	2	[LFD092]INC.2-5
-	234A8-10581		FORK	フォーク	2	[LFD100]INC.2-5
-	234A8-10511		FORK	フォーク	2	[LFD107]INC.2-5
-	234A8-10591		FORK	フォーク	2	[LFD110]INC.2-5
-	234A8-10601		FORK	フォーク	2	[LFD120]INC.2-5
-	234A8-10521		FORK	フォーク	2	[LFD122]INC.2-5
-	234A8-10611		FORK	フォーク	2	[LFD130]INC.2-5
-	234A8-10531		FORK	フォーク	2	[LFD137]INC.2-5
-	234A8-10621		FORK	フォーク	2	[LFD140]INC.2-5
-	234A8-10631		FORK	フォーク	2	[LFD150]INC.2-5
-	234A8-10541		FORK	フォーク	2	[LFD152]INC.2-5
-	234A8-10641		FORK	フォーク	2	[LFD160]INC.2-5
-	234A8-10551		FORK	フォーク	2	[LFD167]INC.2-5
-	234A8-10652		FORK	フォーク	2	[LFD170]INC.2-5
-	234A8-10662		FORK	フォーク	2	[LFD180]INC.2-5
-	234A8-10562		FORK	フォーク	2	[LFD182]INC.2-5
-	234A8-10672		FORK	フォーク	2	[LFD190]INC.2-5

FIG.211 FORK [VFM39A]

(M5028130) フォーク

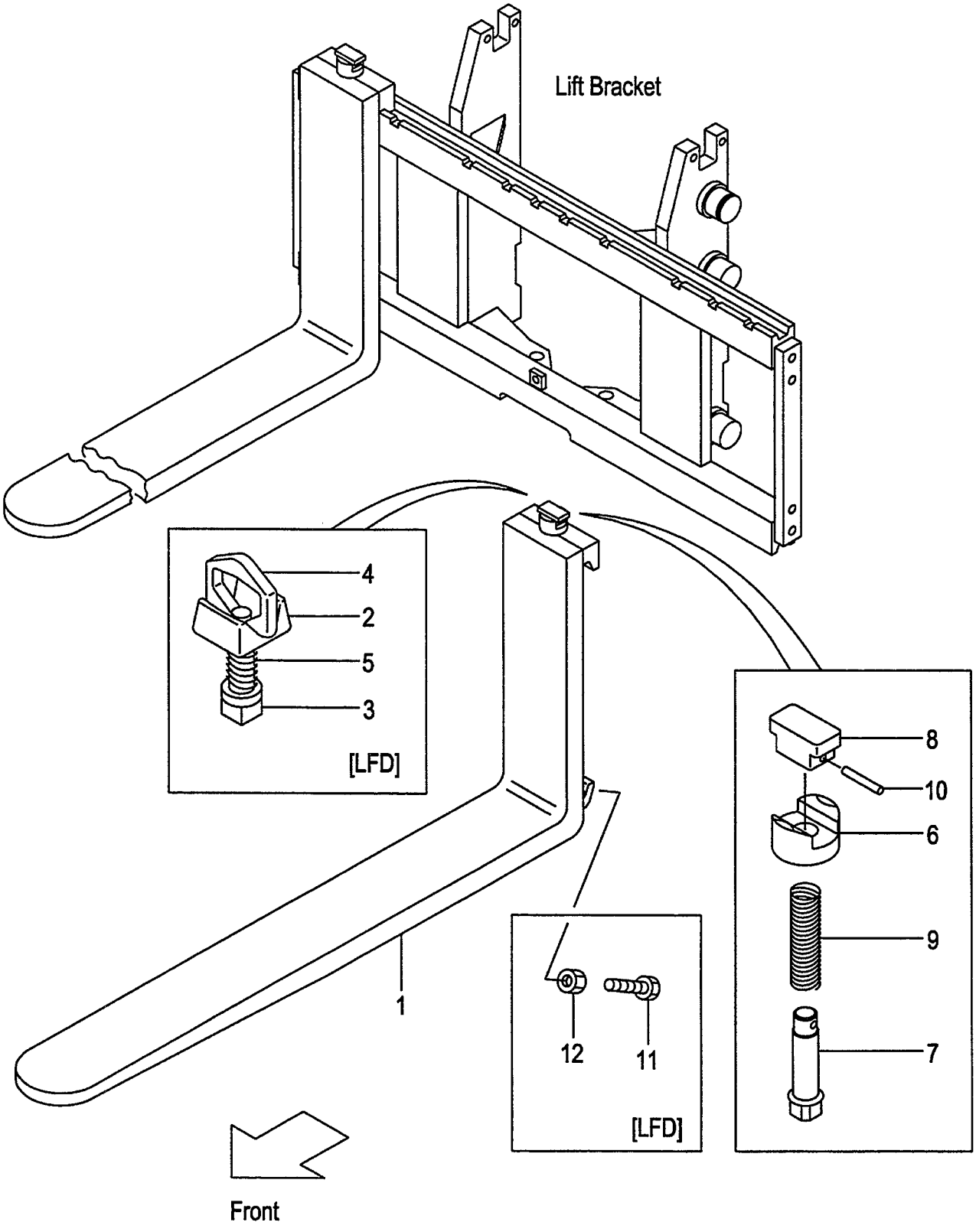

A:VFM39A(2T)
B:VFM39A(2.5T)

FIG.211
(M5028130)

Item No	Part No.	Mark	Description		Req'd	Remarks : Serial No.
-	234A8-10682		FORK	ﾌｫｰｸ	2	[LFD200]INC.2-5
A1	214A8-11001		STOPPER-ASSY,FORK	ｽﾄｯﾊﾟｱｯｾﾝ	2	[LFD]INC.2-5
2	214A8-12001		HEAD,FORK	ﾍｯﾄﾞ	2	[LFD]
3	214A8-12011		STOPPER,FORK	ｽﾄｯﾊﾟ	2	[LFD]
4	214A8-12021		HANDLE	ﾊﾝﾄﾞﾙ	2	[LFD]
5	214A8-12031		SPRING	ｽﾌﾟﾘﾝｸﾞ	2	[LFD]
6	216G8-12921		HOLDER	ﾎﾙﾀﾞ	2	[LF]
7	231A8-12001		PIN	ﾋﾟﾝ	2	[LF]
8	231A8-12011		KNOB	ﾉﾌﾞ	2	[LF]
9	231A8-12021		SPRING	ｽﾌﾟﾘﾝｸﾞ	2	[LF]
10	231A8-12031		PIN,SPRING	ﾋﾟﾝ	2	[LF]
11	216G8-12101		BOLT	ﾎﾞﾙﾄ	4	[LFD]
12	01402-00010		NUT	ﾅｯﾄ	4	[LFD]

FIG.212 LIFT BRACKET [VFM39A]

(M5020610) リフトブラケット

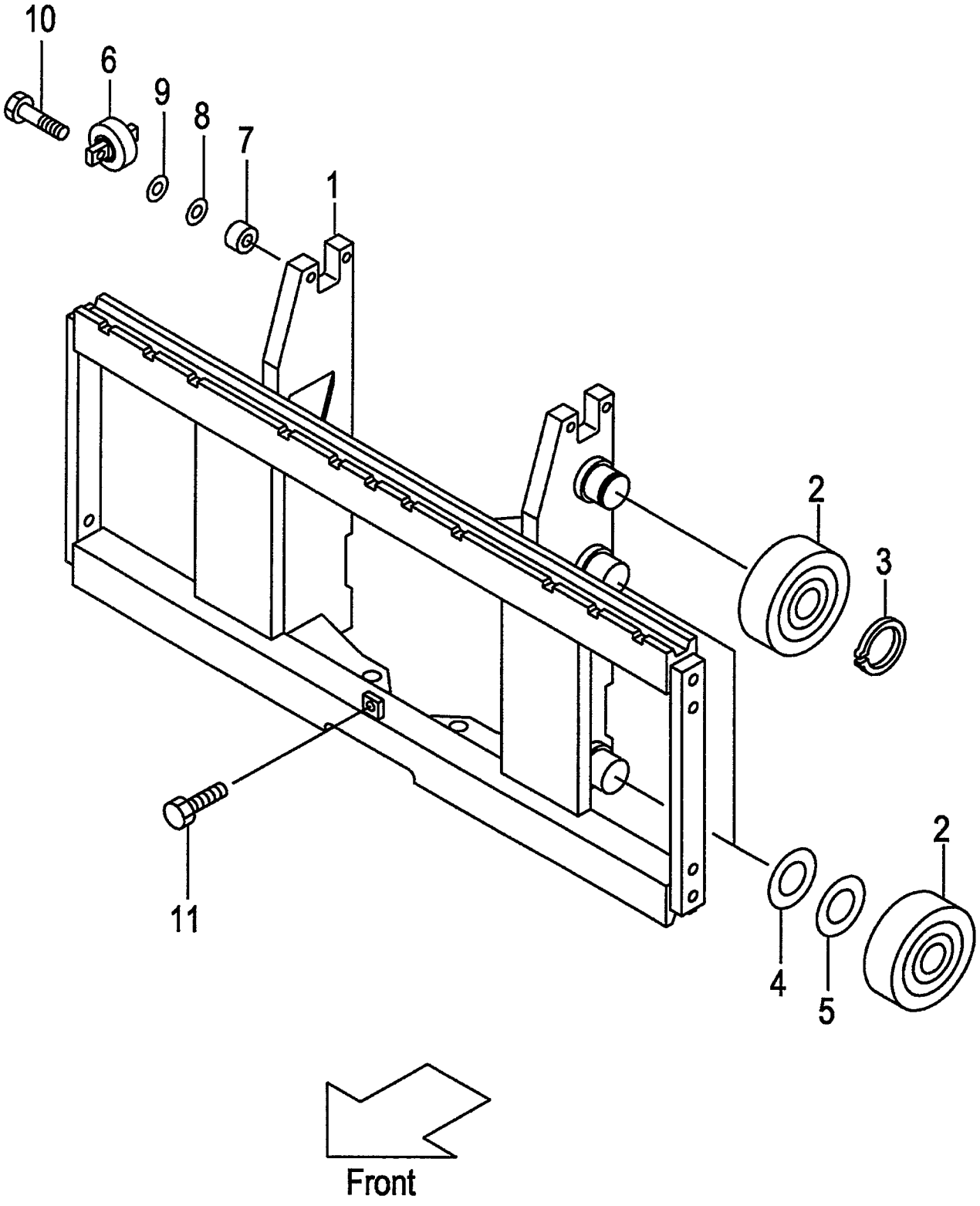

A:VFM39A(2T)
B:VFM39A(2.5T)

FIG.212
(M5020610)

Item No	Part No.	Mark	Description		Req'd	Remarks : Serial No.
1	239A0-60101		BRACKET,LIFT	ﾌﾞﾗｹｯﾄ	1	
-	539A1-64101		BRACKET,LIFT	ﾌﾞﾗｹｯﾄ	1	[WFX110][WFX114][WFX127] [WFX135][WFX138]
-	539A1-64111		BRACKET,LIFT (L)	ﾌﾞﾗｹｯﾄ	1	[WFX135][WFX138][WFX145] [WFX146][WFX154][WFX180]
2	277P8-22051		ROLLER,END	ﾛｰﾗ	6	
-	277P8-22061		ROLLER,END	ﾛｰﾗ	(6)	
-	577P3-74001		ROLLER,END	ﾛｰﾗ	6	[FC][CS35][FCS35][FCS45]
-	577P3-74011		ROLLER,END	ﾛｰﾗ	(6)	[FC][CS35][FCS35][FCS45]
3	02100-00045		RING,SNAP	ｽﾅｯﾌﾟﾘﾝｸﾞ	2	
4	277P8-22071		SHIM,T-0.5	ｼﾑ	5	
5	277P8-22081		SHIM,T-1.0	ｼﾑ	5	
6	23458-32052		ROLLER,SIDE	ﾛｰﾗ	2	
-	514A3-71702		ROLLER,SIDE	ﾛｰﾗ	2	[FC][CS35][FCS35][FCS45]
7	22548-34031		SPACER	ｽﾍﾟｰｻ	4	
8	22548-34051		SHIM,T-0.5	ｼﾑ	5	
9	22548-34061		SHIM,T-1.0	ｼﾑ	5	
10	01184-12050		BOLT & WASHER	ﾎﾞﾙﾄ & ﾜｯｼｬ	4	
-	01184-12040		BOLT & WASHER	ﾎﾞﾙﾄ & ﾜｯｼｬ	4	[FC][CS35][FCS35][FCS45]
11	01184-12025		BOLT & WASHER	ﾎﾞﾙﾄ & ﾜｯｼｬ	1	

FIG.213 BACKREST [VFM39A]

(M5028250) ﾊﾞｯｸﾚｽﾄ

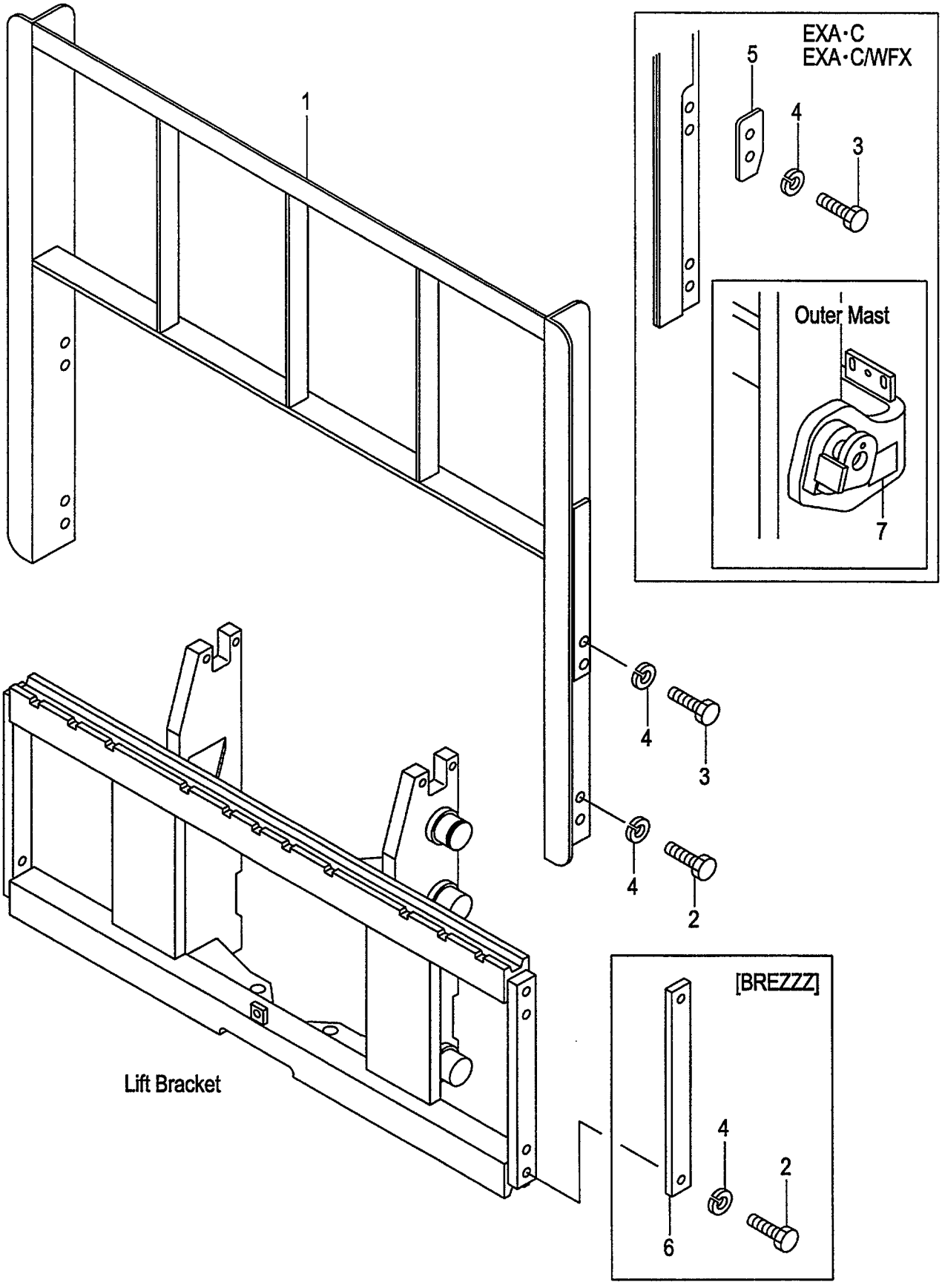

A:VFM39A(2T)
B:VFM39A(2.5T)

FIG.213
(M5028250)

Item No	Part No.	Mark	Description		Req'd	Remarks : Serial No.
1	234A8-22202		BACKREST	ﾊﾞｯｸﾚｽﾄ	1	(WITHOUT BREZZZ)
-	534A2-74001		BACKREST	ﾊﾞｯｸﾚｽﾄ	1	[EXA][EXC]
-	239A8-20101		BACKREST	ﾊﾞｯｸﾚｽﾄ	1	[HBR110]
-	239A8-20111		BACKREST	ﾊﾞｯｸﾚｽﾄ	1	[HBR120]
-	239A8-20121		BACKREST	ﾊﾞｯｸﾚｽﾄ	1	[HBR130]
-	239A8-20131		BACKREST	ﾊﾞｯｸﾚｽﾄ	1	[HBR140]
-	239A8-20141		BACKREST	ﾊﾞｯｸﾚｽﾄ	1	[HBR150]
-	534A1-64402		BACKREST	ﾊﾞｯｸﾚｽﾄ	1	[WFX135]
-	534A1-64412		BACKREST	ﾊﾞｯｸﾚｽﾄ	1	[WFX146]
-	534A2-74101		BACKREST	ﾊﾞｯｸﾚｽﾄ	1	[WFX135/EXA][WFX135/EXC]
-	534A2-74201		BACKREST	ﾊﾞｯｸﾚｽﾄ	1	[WFX146/EXA][WFX146/EXC]
2	01100-14025		BOLT	ﾎﾞﾙﾄ	4	
-	01100-14030		BOLT	ﾎﾞﾙﾄ	4	[HBR]
3	01100-14030		BOLT	ﾎﾞﾙﾄ	4	(WITHOUT BREZZZ)
-	01100-14035		BOLT	ﾎﾞﾙﾄ	4	[EXA][EXC][WFX/EXA] [WFX/EXC]
4	02010-00014		WASHER	ﾜｯｼｬ	8	
-	02010-00014		WASHER	ﾜｯｼｬ	4	[BREZZZ]
5	534A2-74051		PLATE,STOPPER	ﾌﾟﾚｰﾄ	2	[EXA][EXC][WFX/EXA] [WFX/EXC]
6	23659-42161		PLATE	ﾌﾟﾚｰﾄ	2	[BREZZZ]
7	534A2-74301		DECAL,CAUTION	ﾃﾞｶﾙ	1	[EXA][EXC][WFX/EXA] [WFX/EXC]

FIG.214 MAST [VFM39A]

(M5020410) マスト

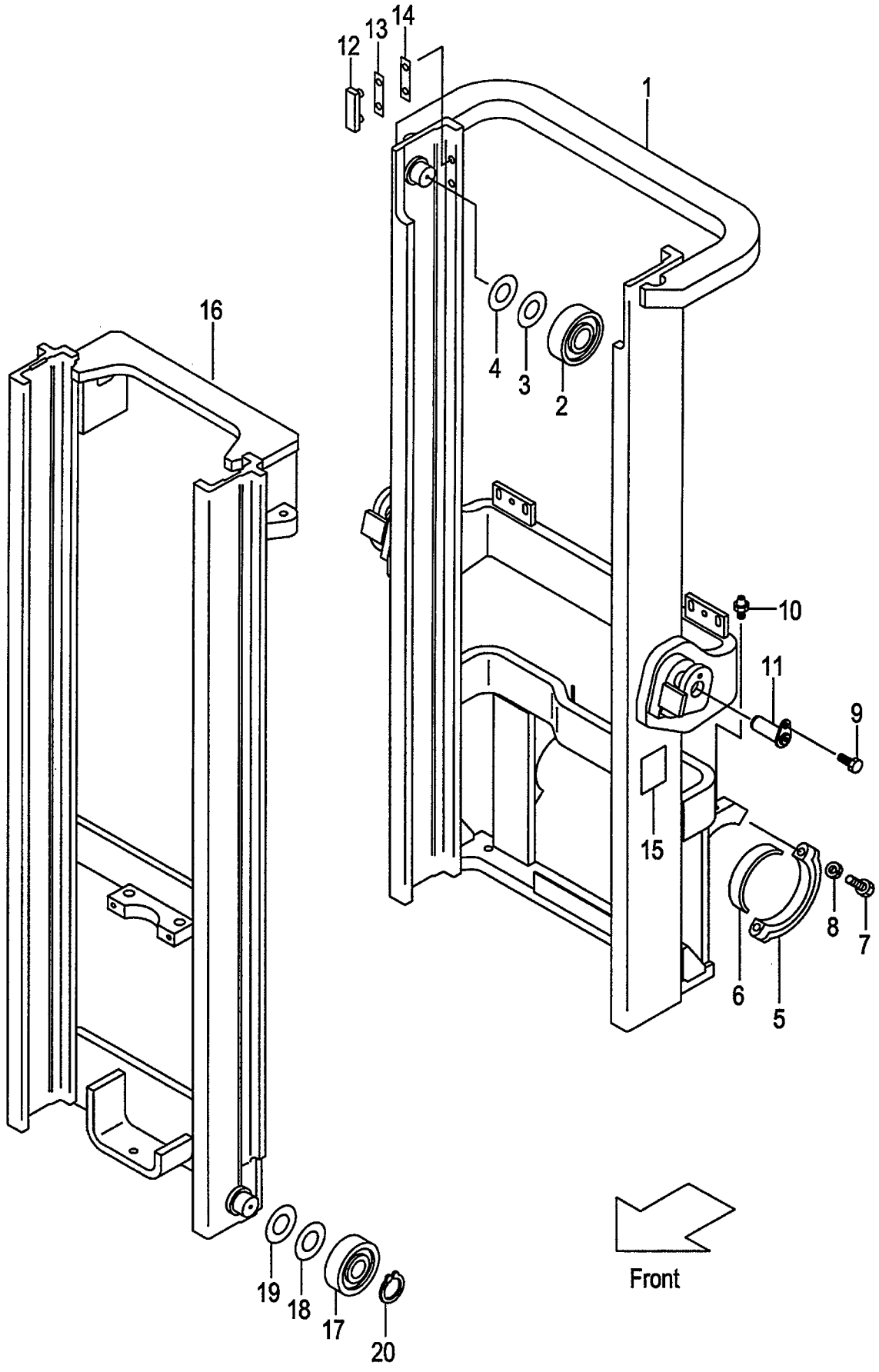

A:VFM39A(2T)
B:VFM39A(2.5T)

FIG.214
(M5020410)

Item No	Part No.	Mark	Description		Req'd	Remarks : Serial No.
1	239A0-40011		MAST,OUTER VFM200	ｱｳﾀﾏｽﾄ	1	
-	239A0-40021		MAST,OUTER VFM225	ｱｳﾀﾏｽﾄ	1	
-	239A0-40031		MAST,OUTER VFM250	ｱｳﾀﾏｽﾄ	1	
-	239A0-40041		MAST,OUTER VFM270	ｱｳﾀﾏｽﾄ	1	
-	239A0-40051		MAST,OUTER VFM275	ｱｳﾀﾏｽﾄ	1	
-	239A0-40001		MAST,OUTER VFM300	ｱｳﾀﾏｽﾄ	1	
-	239A0-40061		MAST,OUTER VFM325	ｱｳﾀﾏｽﾄ	1	
-	239A0-40071		MAST,OUTER VFM330	ｱｳﾀﾏｽﾄ	1	
-	239A0-40081		MAST,OUTER VFM350	ｱｳﾀﾏｽﾄ	1	
-	239A0-40091		MAST,OUTER VFM366	ｱｳﾀﾏｽﾄ	1	
-	239A0-40101		MAST,OUTER VFM370	ｱｳﾀﾏｽﾄ	1	
-	239A0-40111		MAST,OUTER VFM375	ｱｳﾀﾏｽﾄ	1	
-	239A0-40121		MAST,OUTER VFM400	ｱｳﾀﾏｽﾄ	1	
-	239A0-40131		MAST,OUTER VFM425	ｱｳﾀﾏｽﾄ	1	
-	239A0-40141		MAST,OUTER VFM450	ｱｳﾀﾏｽﾄ	1	
-	239A0-40151		MAST,OUTER VFM475	ｱｳﾀﾏｽﾄ	1	
-	239A0-40161		MAST,OUTER VFM500	ｱｳﾀﾏｽﾄ	1	
-	239A0-40171		MAST,OUTER VFM550	ｱｳﾀﾏｽﾄ	1	
-	239A0-40181		MAST,OUTER VFM600	ｱｳﾀﾏｽﾄ	1	
-	539A3-91211		MAST,OUTER VFM200	ｱｳﾀﾏｽﾄ	1	[RW][HC][EXR]
-	539A3-91221		MAST,OUTER VFM225	ｱｳﾀﾏｽﾄ	1	[RW][HC][EXR]
-	539A3-91231		MAST,OUTER VFM250	ｱｳﾀﾏｽﾄ	1	[RW][HC][EXR]
-	539A3-91241		MAST,OUTER VFM270	ｱｳﾀﾏｽﾄ	1	[RW][HC][EXR]
-	539A3-91251		MAST,OUTER VFM275	ｱｳﾀﾏｽﾄ	1	[RW][HC][EXR]
-	539A3-91201		MAST,OUTER VFM300	ｱｳﾀﾏｽﾄ	1	[RW][HC][EXR]
-	539A3-91261		MAST,OUTER VFM325	ｱｳﾀﾏｽﾄ	1	[RW][HC][EXR]
-	539A3-91271		MAST,OUTER VFM330	ｱｳﾀﾏｽﾄ	1	[RW][HC][EXR]
-	539A3-91281		MAST,OUTER VFM350	ｱｳﾀﾏｽﾄ	1	[RW][HC][EXR]
-	539A3-91291		MAST,OUTER VFM366	ｱｳﾀﾏｽﾄ	1	[RW][HC][EXR]
-	539A3-91301		MAST,OUTER VFM370	ｱｳﾀﾏｽﾄ	1	[RW][HC][EXR]
-	539A3-91311		MAST,OUTER VFM375	ｱｳﾀﾏｽﾄ	1	[RW][HC][EXR]
-	539A3-91321		MAST,OUTER VFM400	ｱｳﾀﾏｽﾄ	1	[RW][HC][EXR]
-	539A3-91331		MAST,OUTER VFM425	ｱｳﾀﾏｽﾄ	1	[RW][HC][EXR]
-	539A3-91341		MAST,OUTER VFM450	ｱｳﾀﾏｽﾄ	1	[RW][HC][EXR]
-	539A3-91351		MAST,OUTER VFM475	ｱｳﾀﾏｽﾄ	1	[RW][HC][EXR]
-	539A3-91361		MAST,OUTER VFM500	ｱｳﾀﾏｽﾄ	1	[RW][HC][EXR]
-	539A3-91371		MAST,OUTER VFM550	ｱｳﾀﾏｽﾄ	1	[RW][HC][EXR]
-	539A3-91381		MAST,OUTER VFM600	ｱｳﾀﾏｽﾄ	1	[RW][HC][EXR]
2	277P8-22051		ROLLER,END	ﾛｰﾗ	2	
-	577P3-74001		ROLLER,END	ﾛｰﾗ	2	[FC][CS35][FCS35][FCS45] [FCS55]
3	277P8-22071		SHIM,T-0.5	ｼﾑ	12	
4	277P8-22081		SHIM,T-1.0	ｼﾑ	12	
5	22018-30065		CAP,MAST-SUPPORT	ｻﾎﾟｰﾄ	2	
-	22018-30064		CAP,MAST-SUPPORT	ｻﾎﾟｰﾄ	2	(EU PRODUCT ON,LY)
6	214A8-02201		BUSHING	ﾌﾞｯｼﾝｸﾞ	2	
7	01103-16065		BOLT	ﾎﾞﾙﾄ	4	
8	02011-00016		WASHER	ﾜｯｼｬ	4	
9	216G8-52301		BOLT & WASHER	ﾎﾞﾙﾄ & ﾜｯｼｬ	2	
-	01184-10020		BOLT & WASHER	ﾎﾞﾙﾄ & ﾜｯｼｬ	2	(EU PRODUCT ON,LY)

FIG.214 MAST [VFM39A]

(M5020410) マスト

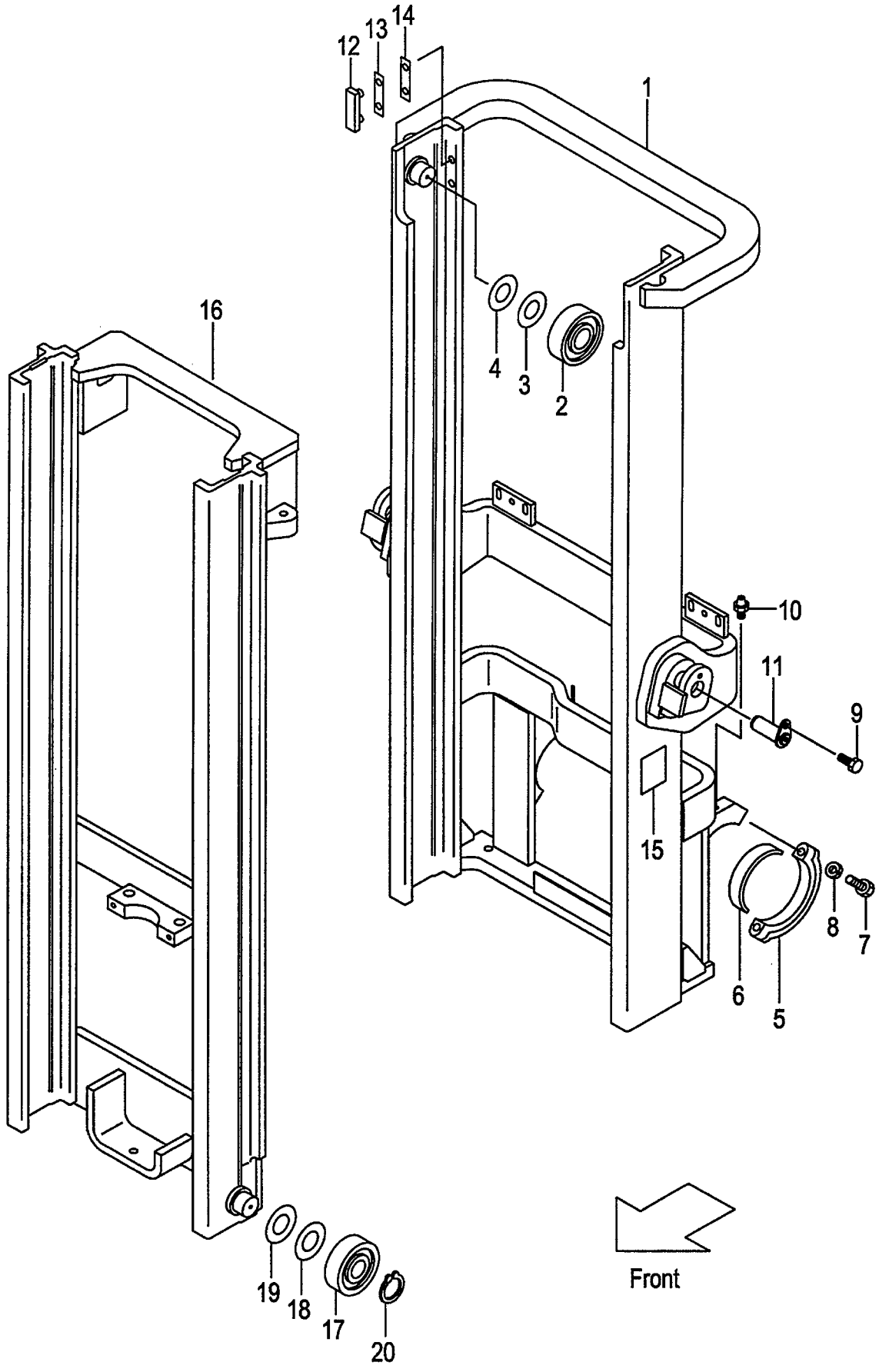

A:VFM39A(2T)
B:VFM39A(2.5T)

FIG.214
(M5020410)

Item No	Part No.	Mark	Description		Req'd	Remarks : Serial No.
10	04901-00100		FITTING	ﾌｨｯﾃｨﾝｸﾞ	2	
11	272K8-52201		PIN	ﾋﾟﾝ	2	
-	234A8-02001		PIN	ﾋﾟﾝ	2	(EU PRODUCT ON,LY)
12	216G8-33401		SLIPPER	ｽﾘｯﾊﾟ	2	
13	216G8-33361		SHIM,T-0.5	ｼﾑ	8	
14	216G8-33371		SHIM,T-1.0	ｼﾑ	4	
15	23678-06002		PLATE,NAME	ﾌﾟﾚｰﾄ	1	
16	231A0-40212		MAST,INNER VFM200	ｲﾝﾅﾏｽﾄ	1	
-	231A0-40222		MAST,INNER VFM225	ｲﾝﾅﾏｽﾄ	1	
-	231A0-40232		MAST,INNER VFM250	ｲﾝﾅﾏｽﾄ	1	
-	231A0-40242		MAST,INNER VFM270	ｲﾝﾅﾏｽﾄ	1	
-	231A0-40252		MAST,INNER VFM275	ｲﾝﾅﾏｽﾄ	1	
-	231A0-40202		MAST,INNER VFM300	ｲﾝﾅﾏｽﾄ	1	
-	231A0-40262		MAST,INNER VFM325	ｲﾝﾅﾏｽﾄ	1	
-	231A0-40272		MAST,INNER VFM330	ｲﾝﾅﾏｽﾄ	1	
-	231A0-40282		MAST,INNER VFM350	ｲﾝﾅﾏｽﾄ	1	
-	231A0-40292		MAST,INNER VFM366	ｲﾝﾅﾏｽﾄ	1	
-	231A0-40302		MAST,INNER VFM370	ｲﾝﾅﾏｽﾄ	1	
-	231A0-40312		MAST,INNER VFM375	ｲﾝﾅﾏｽﾄ	1	
-	231A0-40322		MAST,INNER VFM400	ｲﾝﾅﾏｽﾄ	1	
-	231A0-40332		MAST,INNER VFM425	ｲﾝﾅﾏｽﾄ	1	
-	231A0-40342		MAST,INNER VFM450	ｲﾝﾅﾏｽﾄ	1	
-	231A0-40352		MAST,INNER VFM475	ｲﾝﾅﾏｽﾄ	1	
-	231A0-40362		MAST,INNER VFM500	ｲﾝﾅﾏｽﾄ	1	
-	231A0-40372		MAST,INNER VFM550	ｲﾝﾅﾏｽﾄ	1	
-	231A0-40382		MAST,INNER VFM600	ｲﾝﾅﾏｽﾄ	1	
17	277P8-22051		ROLLER,END	ﾛｰﾗ	2	
-	577P3-74001		ROLLER,END	ﾛｰﾗ	2	[FC][CS35][FCS35][FCS45] [FCS55]
-	277P8-22061		ROLLER,END	ﾛｰﾗ	(2)	
-	577P3-74011		ROLLER,END	ﾛｰﾗ	(2)	[FC][CS35][FCS35][FCS45] [FCS55]
18	277P8-22071		SHIM,T-0.5	ｼﾑ	12	
-	277P8-22071		SHIM,T-0.5	ｼﾑ	10	[FC][CS35][FCS35][FCS45] [FCS55]
19	277P8-22081		SHIM,T-1.0	ｼﾑ	12	
-	277P8-22081		SHIM,T-1.0	ｼﾑ	10	[FC][CS35][FCS35][FCS45] [FCS55]
20	09192-30044		RING,SNAP	ｽﾅｯﾌﾟﾘﾝｸﾞ	2	

FIG.215 TILT GAUGE [VFM39A/(TG,PPC,PR,PRC,MPC)]

(M5020420) ﾃｨﾙﾄｹﾞｰｼﾞ

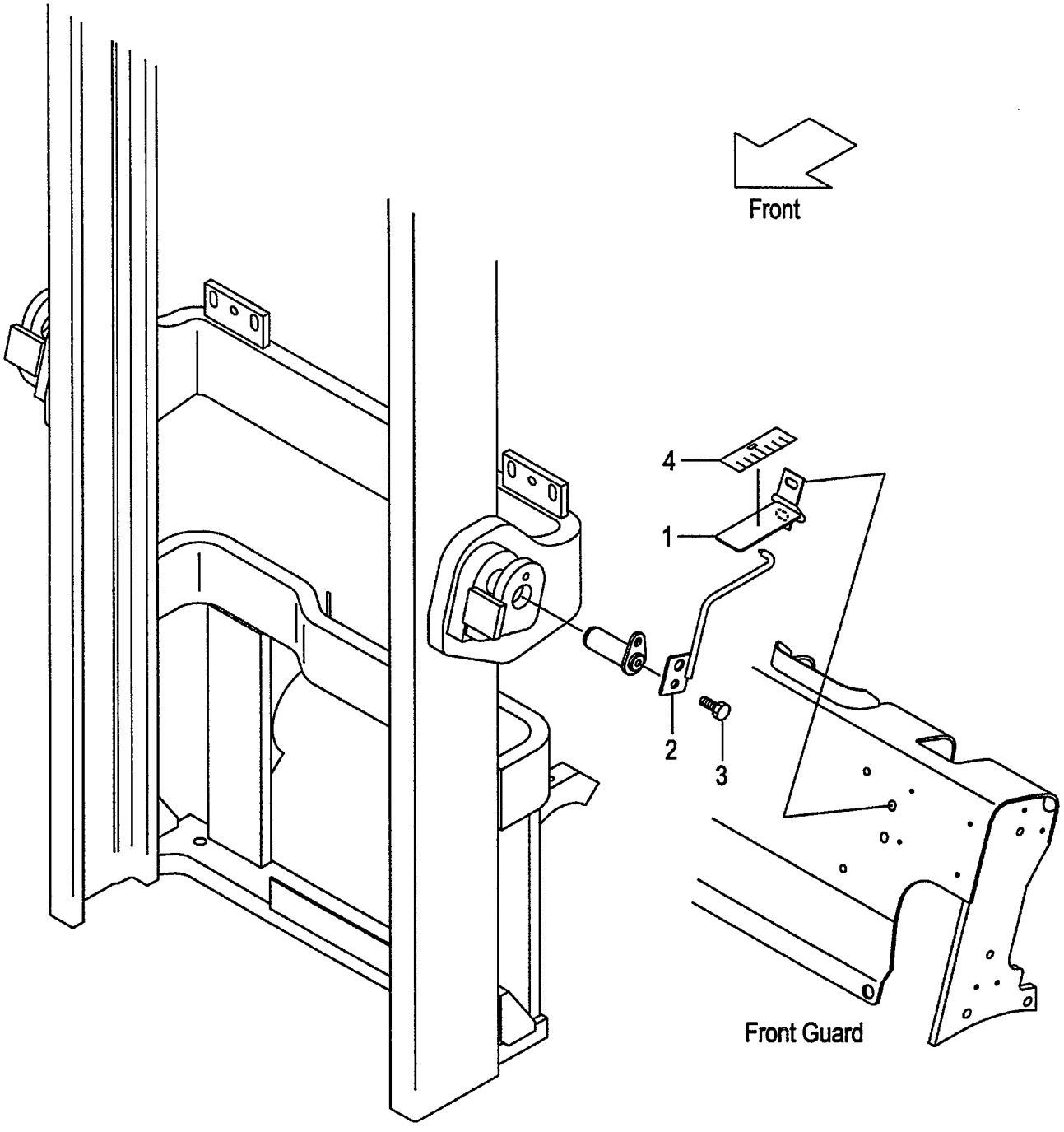

A:VFM39A(2T)
B:VFM39A(2.5T)

FIG.215
(M5020420)

Item No	Part No.	Mark	Description		Req'd	Remarks : Serial No.
1	639A0-10011		GAUGE,TILT	ｹﾞｰｼﾞ	1	[TG/VFM250-600] [PPC/VFM250-600] [PR/VFM250-600]
-	639A0-10011		GAUGE,TILT	ｹﾞｰｼﾞ	1	[PRC/VFM250-600] [MPC/VFM250-600]
2	639A0-10051		INDICATOR	ｲﾝｼﾞｹｰﾀ	1	[TG/VFM250-600] [PPC/VFM250-600] [PR/VFM250-600]
-	639A0-10051		INDICATOR	ｲﾝｼﾞｹｰﾀ	1	[PRC/VFM250-600] [MPC/VFM250-600]
3	216G4-12251		BOLT	ﾎﾞﾙﾄ	1	[TG/VFM250-600] [PPC/VFM250-600] [PR/VFM250-600]
-	216G4-12251		BOLT	ﾎﾞﾙﾄ	1	[PRC/VFM250-600] [MPC/VFM250-600]
4	62459-23371		SEAL,GAUGE	ｼｰﾙ	1	[TG/VFM250-600] [PPC/VFM250-600] [PR/VFM250-600]
-	62459-23371		SEAL,GAUGE	ｼｰﾙ	1	[PRC/VFM250-600] [MPC/VFM250-600]

FIG.216 LIFT CYLINDER (FRONT) [VFM39A]

(M5020510) リフトシリンダ(フロント)

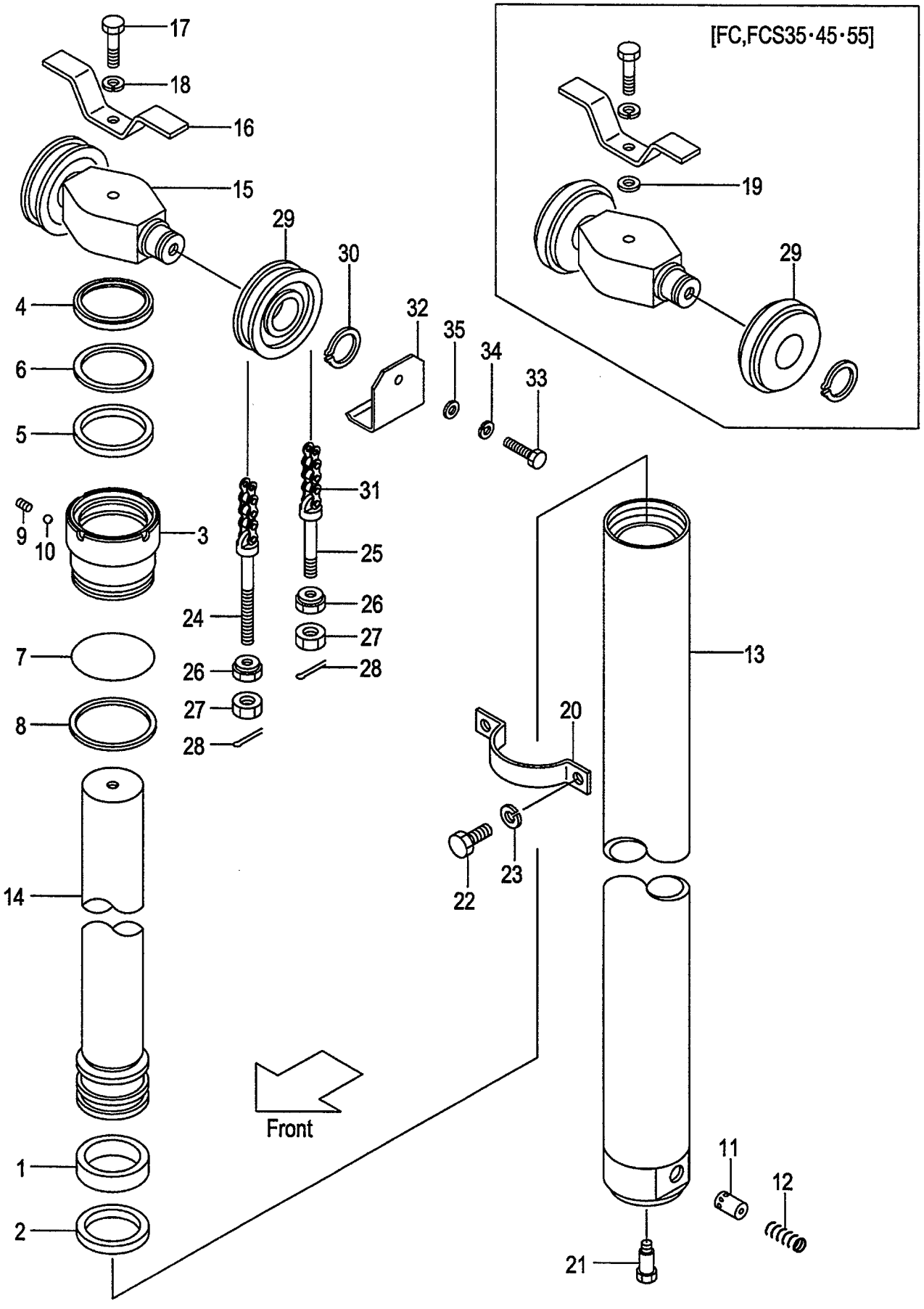

A:VFM39A(2T)
B:VFM39A(2.5T)

FIG.216
(M5020510)

Item No	Part No.	Mark	Description		Req'd	Remarks : Serial No.
A1	277P0-50111		CYL-ASSY,LIFT VFM200	ｼﾘﾝﾀﾞｱｯｾﾝ	1	INC.1-14
-	277P0-50121		CYL-ASSY,LIFT VFM225	ｼﾘﾝﾀﾞｱｯｾﾝ	1	INC.1-14
-	277P0-50131		CYL-ASSY,LIFT VFM250	ｼﾘﾝﾀﾞｱｯｾﾝ	1	INC.1-14
-	277P0-50141		CYL-ASSY,LIFT VFM270	ｼﾘﾝﾀﾞｱｯｾﾝ	1	INC.1-14
-	277P0-50151		CYL-ASSY,LIFT VFM275	ｼﾘﾝﾀﾞｱｯｾﾝ	1	INC.1-14
-	277P0-50101		CYL-ASSY,LIFT VFM300	ｼﾘﾝﾀﾞｱｯｾﾝ	1	INC.1-14
-	277P0-50161		CYL-ASSY,LIFT VFM325	ｼﾘﾝﾀﾞｱｯｾﾝ	1	INC.1-14
-	277P0-50171		CYL-ASSY,LIFT VFM330	ｼﾘﾝﾀﾞｱｯｾﾝ	1	INC.1-14
-	277P0-50181		CYL-ASSY,LIFT VFM350	ｼﾘﾝﾀﾞｱｯｾﾝ	1	INC.1-14
-	277P0-50191		CYL-ASSY,LIFT VFM366	ｼﾘﾝﾀﾞｱｯｾﾝ	1	INC.1-14
-	277P0-50201		CYL-ASSY,LIFT VFM370	ｼﾘﾝﾀﾞｱｯｾﾝ	1	INC.1-14
-	277P0-50211		CYL-ASSY,LIFT VFM375	ｼﾘﾝﾀﾞｱｯｾﾝ	1	INC.1-14
-	277P0-50221		CYL-ASSY,LIFT VFM400	ｼﾘﾝﾀﾞｱｯｾﾝ	1	INC.1-14
-	277P0-50231		CYL-ASSY,LIFT VFM425	ｼﾘﾝﾀﾞｱｯｾﾝ	1	INC.1-14
-	277P0-50241		CYL-ASSY,LIFT VFM450	ｼﾘﾝﾀﾞｱｯｾﾝ	1	INC.1-14
-	277P0-50251		CYL-ASSY,LIFT VFM475	ｼﾘﾝﾀﾞｱｯｾﾝ	1	INC.1-14
-	277P0-50261		CYL-ASSY,LIFT VFM500	ｼﾘﾝﾀﾞｱｯｾﾝ	1	INC.1-14
-	277P0-50271		CYL-ASSY,LIFT VFM550	ｼﾘﾝﾀﾞｱｯｾﾝ	1	INC.1-14
-	277P0-50281		CYL-ASSY,LIFT VFM600	ｼﾘﾝﾀﾞｱｯｾﾝ	1	INC.1-14
1	22438-42641	*	WEARING	ｳｴｱﾘﾝｸﾞ	1	
2	53658-42011	*	RING,PISTON	ﾘﾝｸﾞ	1	
3	277P0-82061		CAP,CYL	ｷｬｯﾌﾟ	1	
4	27410-53201	*	SEAL,DUST	ｼｰﾙ	1	
5	23670-82251	*	PACKING	ﾊﾟｯｷﾝｸﾞ	1	
6	23670-82261	*	RING,BACK-UP	ﾘﾝｸﾞ	1	
7	03350-00850	*	O-RING	Oﾘﾝｸﾞ	1	
8	277P0-82071	*	RING,BACK-UP	ﾘﾝｸﾞ	1	
9	234A0-52611		PLUG	ﾌﾟﾗｸﾞ	1	
10	03190-00006		BALL	ﾎﾞｰﾙ	1	
11	229F0-82101		PISTON	ﾋﾟｽﾄﾝ	1	
12	24389-46021		SPRING	ｽﾌﾟﾘﾝｸﾞ	1	
13	277P0-50311		TUBE,CYL VFM200	ﾁｭｰﾌﾞ	1	
-	277P0-50321		TUBE,CYL VFM225	ﾁｭｰﾌﾞ	1	
-	277P0-50331		TUBE,CYL VFM250	ﾁｭｰﾌﾞ	1	
-	277P0-50341		TUBE,CYL VFM270	ﾁｭｰﾌﾞ	1	
-	277P0-50351		TUBE,CYL VFM275	ﾁｭｰﾌﾞ	1	
-	277P0-50301		TUBE,CYL VFM300	ﾁｭｰﾌﾞ	1	
-	277P0-50361		TUBE,CYL VFM325	ﾁｭｰﾌﾞ	1	
-	277P0-50371		TUBE,CYL VFM330	ﾁｭｰﾌﾞ	1	
-	277P0-50381		TUBE,CYL VFM350	ﾁｭｰﾌﾞ	1	
-	277P0-50391		TUBE,CYL VFM366	ﾁｭｰﾌﾞ	1	
-	277P0-80561		TUBE,CYL VFM370	ﾁｭｰﾌﾞ	1	
-	277P0-50411		TUBE,CYL VFM375	ﾁｭｰﾌﾞ	1	
-	277P0-50421		TUBE,CYL VFM400	ﾁｭｰﾌﾞ	1	
-	277P0-50431		TUBE,CYL VFM425	ﾁｭｰﾌﾞ	1	
-	277P0-50441		TUBE,CYL VFM450	ﾁｭｰﾌﾞ	1	
-	277P0-50451		TUBE,CYL VFM475	ﾁｭｰﾌﾞ	1	
-	277P0-50461		TUBE,CYL VFM500	ﾁｭｰﾌﾞ	1	
-	277P0-50471		TUBE,CYL VFM550	ﾁｭｰﾌﾞ	1	
-	277P0-50481		TUBE,CYL VFM600	ﾁｭｰﾌﾞ	1	

FIG.216 LIFT CYLINDER (FRONT) [VFM39A]

(M5020510) リフトシリンダ(フロント)

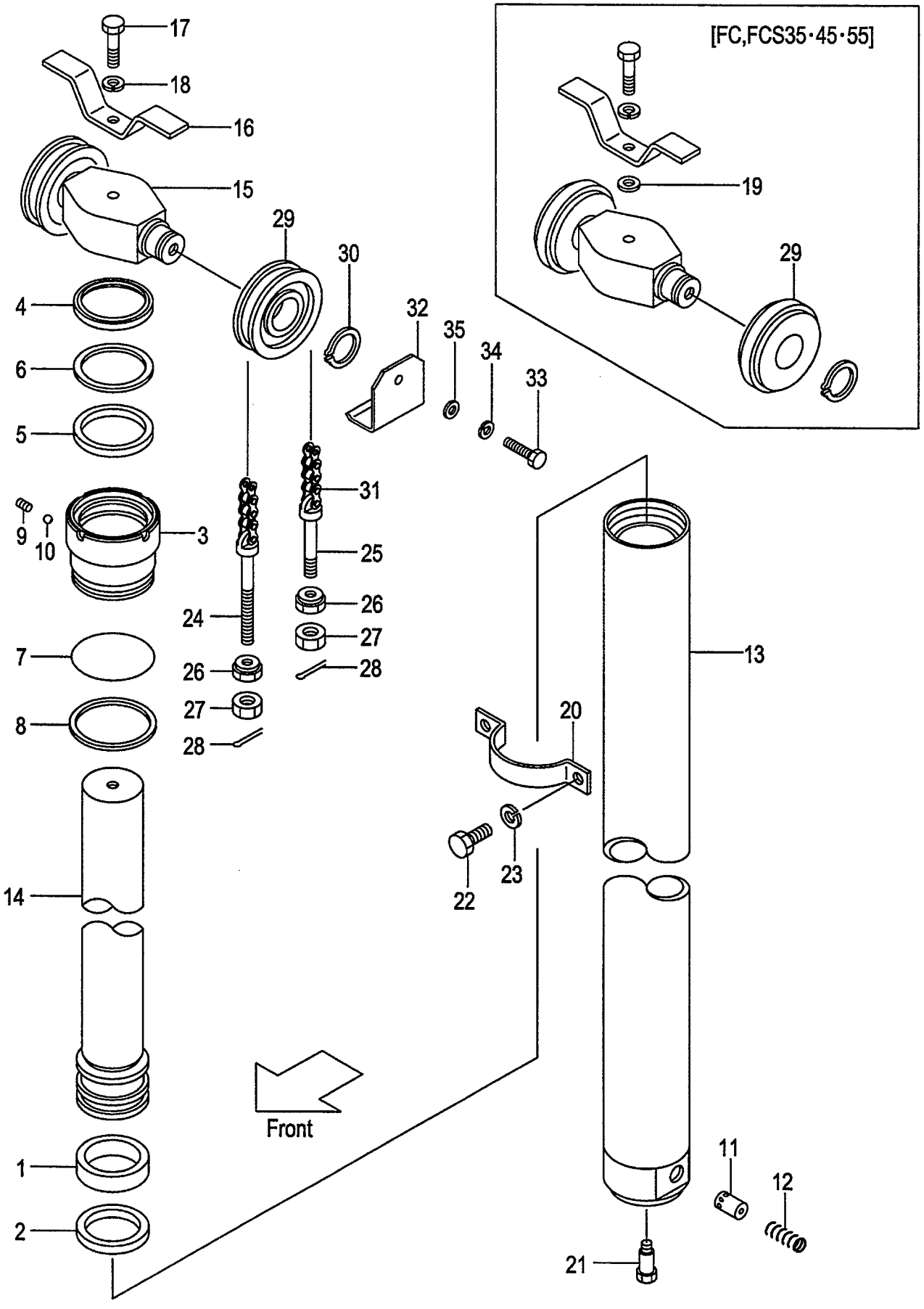

A:VFM39A(2T)
B:VFM39A(2.5T)

FIG.216
(M5020510)

Item No	Part No.	Mark	Description		Req'd	Remarks : Serial No.
14	277P0-50511		ROD,PISTON VFM200	ﾛｯﾄﾞ	1	
-	277P0-50521		ROD,PISTON VFM225	ﾛｯﾄﾞ	1	
-	277P0-50531		ROD,PISTON VFM250	ﾛｯﾄﾞ	1	
-	277P0-50541		ROD,PISTON VFM270	ﾛｯﾄﾞ	1	
-	277P0-50551		ROD,PISTON VFM275	ﾛｯﾄﾞ	1	
-	277P0-50501		ROD,PISTON VFM300	ﾛｯﾄﾞ	1	
-	277P0-50561		ROD,PISTON VFM325	ﾛｯﾄﾞ	1	
-	277P0-50571		ROD,PISTON VFM330	ﾛｯﾄﾞ	1	
-	277P0-50581		ROD,PISTON VFM350	ﾛｯﾄﾞ	1	
-	277P0-50591		ROD,PISTON VFM366	ﾛｯﾄﾞ	1	
-	277P0-50601		ROD,PISTON VFM370	ﾛｯﾄﾞ	1	
-	277P0-50611		ROD,PISTON VFM375	ﾛｯﾄﾞ	1	
-	277P0-50621		ROD,PISTON VFM400	ﾛｯﾄﾞ	1	
-	277P0-50631		ROD,PISTON VFM425	ﾛｯﾄﾞ	1	
-	277P0-50641		ROD,PISTON VFM450	ﾛｯﾄﾞ	1	
-	277P0-50651		ROD,PISTON VFM475	ﾛｯﾄﾞ	1	
-	277P0-50661		ROD,PISTON VFM500	ﾛｯﾄﾞ	1	
-	277P0-50671		ROD,PISTON VFM550	ﾛｯﾄﾞ	1	
-	277P0-50681		ROD,PISTON VFM600	ﾛｯﾄﾞ	1	
15	277P0-82501		HEAD,PISTON	ﾍｯﾄﾞ	1	
16	214A0-82681		STOPPER,CHAIN	ｽﾄｯﾊﾟ	1	
17	01100-16075		BOLT	ﾎﾞﾙﾄ	1	
18	02010-00016		WASHER	ﾜｯｼｬ	1	
19	02000-20016		WASHER	ﾜｯｼｬ	1	[FC][FCS35][FCS45][FCS55]
20	214A0-82651		SUPPORT,CYL	ｻﾎﾟｰﾄ	1	
21	214A0-82831		BOLT	ﾎﾞﾙﾄ	1	
22	01103-10020		BOLT	ﾎﾞﾙﾄ	2	
23	02011-00010		WASHER	ﾜｯｼｬ	2	
24	52672-72231		PIN,ANCHOR	ﾋﾟﾝ	2	
-	22218-42111		PIN,ANCHOR	ﾋﾟﾝ	2	[FC][FCS35][FCS45][FCS55]
25	23500-82001		PIN,ANCHOR	ﾋﾟﾝ	2	
-	231A0-82001		PIN,ANCHOR	ﾋﾟﾝ	2	[FC][FCS35][FCS45][FCS55]
26	22218-40191		NUT	ﾅｯﾄ	4	
27	01400-00018		NUT	ﾅｯﾄ	4	
28	02200-03030		PIN	ﾋﾟﾝ	4	
29	234A8-43501		SHEAVE	ｼｰﾌﾞ	2	
-	22208-40031		SHEAVE	ｼｰﾌﾞ	2	[FC][FCS35][FCS45][FCS55]
30	02100-00040		RING,SNAP	ｽﾅｯﾌﾟﾘﾝｸﾞ	2	
31	22679-45611		CHAIN,LEAF VFM200	ﾁｪｰﾝ	2	
-	22679-45671		CHAIN,LEAF VFM225	ﾁｪｰﾝ	2	
-	22679-45711		CHAIN,LEAF VFM250	ﾁｪｰﾝ	2	
-	22679-45771		CHAIN,LEAF VFM270	ﾁｪｰﾝ	2	
-	22679-45791		CHAIN,LEAF VFM275	ﾁｪｰﾝ	2	
-	22679-45811		CHAIN,LEAF VFM300	ﾁｪｰﾝ	2	
-	22679-45891		CHAIN,LEAF VFM325	ﾁｪｰﾝ	2	
-	22679-45891		CHAIN,LEAF VFM330	ﾁｪｰﾝ	2	
-	22679-45951		CHAIN,LEAF VFM350	ﾁｪｰﾝ	2	
-	22679-45991		CHAIN,LEAF VFM366	ﾁｪｰﾝ	2	
-	22679-45991		CHAIN,LEAF VFM370	ﾁｪｰﾝ	2	
-	22679-46011		CHAIN,LEAF VFM375	ﾁｪｰﾝ	2	

FIG.216 LIFT CYLINDER (FRONT) [VFM39A]

(M5020510) リフトシリンダ(フロント)

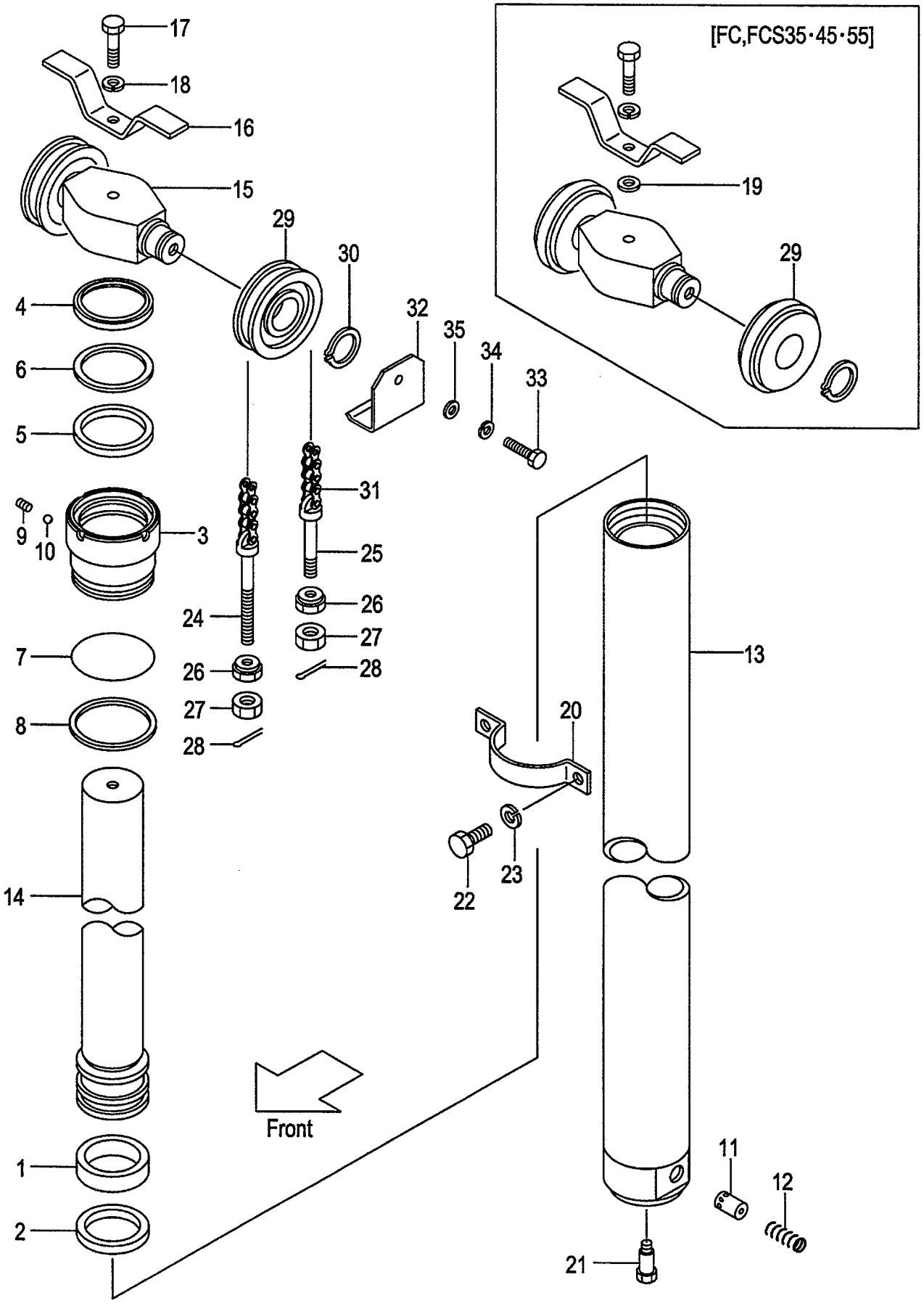

A:VFM39A(2T)
B:VFM39A(2.5T)

FIG.216
(M5020510)

Item No	Part No.	Mark	Description	Req'd	Remarks : Serial No.
-	22679-46111		CHAIN,LEAF VFM400 チェーン	2	
-	22679-46171		CHAIN,LEAF VFM425 チェーン	2	
-	22679-46231		CHAIN,LEAF VFM450 チェーン	2	
-	22679-46311		CHAIN,LEAF VFM475 チェーン	2	
-	22679-46371		CHAIN,LEAF VFM500 チェーン	2	
-	22679-46531		CHAIN,LEAF VFM550 チェーン	2	
-	22679-46651		CHAIN,LEAF VFM600 チェーン	2	
-	09001-10035		CHAIN,ROLLER VFM200 チェーン	2	[FC][FCS35][FCS45][FCS55]
-	09001-10039		CHAIN,ROLLER VFM225 チェーン	2	[FC][FCS35][FCS45][FCS55]
-	09001-10041		CHAIN,ROLLER VFM250 チェーン	2	[FC][FCS35][FCS45][FCS55]
-	09001-10045		CHAIN,ROLLER VFM270 チェーン	2	[FC][FCS35][FCS45][FCS55]
-	09001-10045		CHAIN,ROLLER VFM275 チェーン	2	[FC][FCS35][FCS45][FCS55]
-	09001-10047		CHAIN,ROLLER VFM300 チェーン	2	[FC][FCS35][FCS45][FCS55]
-	09001-10051		CHAIN,ROLLER VFM325 チェーン	2	[FC][FCS35][FCS45][FCS55]
-	09001-10051		CHAIN,ROLLER VFM330 チェーン	2	[FC][FCS35][FCS45][FCS55]
-	09001-10055		CHAIN,ROLLER VFM350 チェーン	2	[FC][FCS35][FCS45][FCS55]
-	09001-10057		CHAIN,ROLLER VFM366 チェーン	2	[FC][FCS35][FCS45][FCS55]
-	09001-10059		CHAIN,ROLLER VFM370 チェーン	2	[FC][FCS35][FCS45][FCS55]
-	09001-10059		CHAIN,ROLLER VFM375 チェーン	2	[FC][FCS35][FCS45][FCS55]
-	09001-10065		CHAIN,ROLLER VFM400 チェーン	2	[FC][FCS35][FCS45][FCS55]
-	09001-10069		CHAIN,ROLLER VFM425 チェーン	2	[FC][FCS35][FCS45][FCS55]
-	09001-10073		CHAIN,ROLLER VFM450 チェーン	2	[FC][FCS35][FCS45][FCS55]
-	09001-10077		CHAIN,ROLLER VFM475 チェーン	2	[FC][FCS35][FCS45][FCS55]
-	09001-10081		CHAIN,ROLLER VFM500 チェーン	2	[FC][FCS35][FCS45][FCS55]
-	09001-10089		CHAIN,ROLLER VFM550 チェーン	2	[FC][FCS35][FCS45][FCS55]
-	09001-10097		CHAIN,ROLLER VFM600 チェーン	2	[FC][FCS35][FCS45][FCS55]
32	534A3-04001		COVER,CHAIN カバー	2	[EXE][EXN]
33	01100-16016		BOLT ボルト	2	[EXE][EXN]
34	02010-00016		WASHER ワッシャ	2	[EXE][EXN]
35	02000-00016		WASHER ワッシャ	2	[EXE][EXN]
K1	277P0-59801		KIT,OVERHAUL オーバホールキット	1	INC.1,2,4-8

FIG.217 LIFT CYLINDER (REAR) [VFM39A]

(M5020520) リフトシリンダ(リヤー)

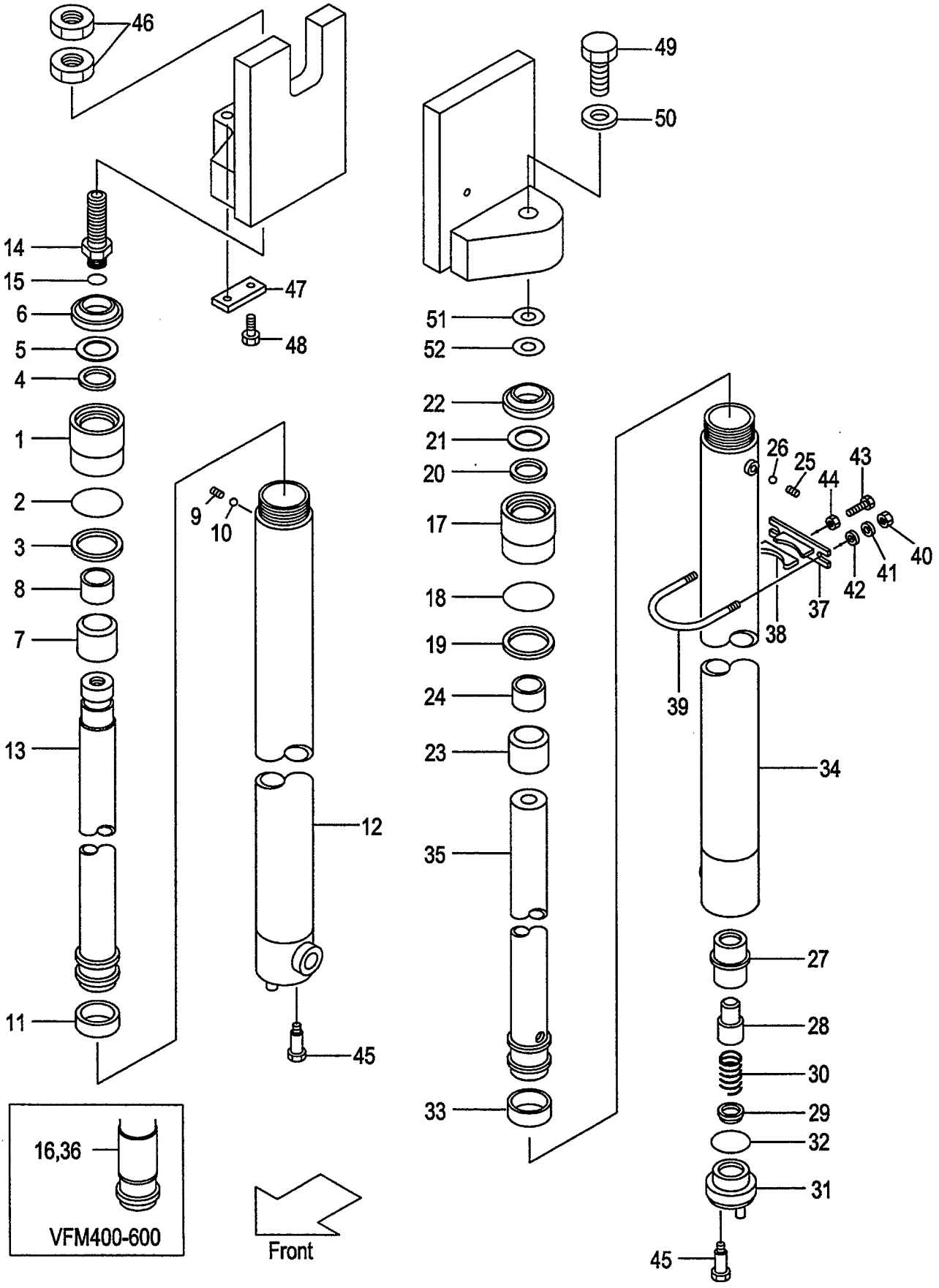

A:VFM39A(2T)
B:VFM39A(2.5T)

FIG.217
(M5020520)

Item No	Part No.	Mark	Description	Req'd	Remarks : Serial No.
A1	234A0-50211		CYL-ASSY,LIFT,RH VFM200 シリンダアッセン	1	INC.1-15
-	234A0-50221		CYL-ASSY,LIFT,RH VFM225 シリンダアッセン	1	INC.1-15
-	234A0-50231		CYL-ASSY,LIFT,RH VFM250 シリンダアッセン	1	INC.1-15
-	234A0-50241		CYL-ASSY,LIFT,RH VFM270 シリンダアッセン	1	INC.1-15
-	234A0-50251		CYL-ASSY,LIFT,RH VFM275 シリンダアッセン	1	INC.1-15
-	234A0-50201		CYL-ASSY,LIFT,RH VFM300 シリンダアッセン	1	INC.1-15
-	234A0-50261		CYL-ASSY,LIFT,RH VFM325 シリンダアッセン	1	INC.1-15
-	234A0-50271		CYL-ASSY,LIFT,RH VFM330 シリンダアッセン	1	INC.1-15
-	234A0-50281		CYL-ASSY,LIFT,RH VFM350 シリンダアッセン	1	INC.1-15
-	234A0-50291		CYL-ASSY,LIFT,RH VFM366 シリンダアッセン	1	INC.1-15
-	234A0-50301		CYL-ASSY,LIFT,RH VFM370 シリンダアッセン	1	INC.1-15
-	234A0-50311		CYL-ASSY,LIFT,RH VFM375 シリンダアッセン	1	INC.1-15
-	234A0-50321		CYL-ASSY,LIFT,RH VFM400 シリンダアッセン	1	INC.1-16
-	234A0-50331		CYL-ASSY,LIFT,RH VFM425 シリンダアッセン	1	INC.1-16
-	234A0-50341		CYL-ASSY,LIFT,RH VFM450 シリンダアッセン	1	INC.1-16
-	234A0-50351		CYL-ASSY,LIFT,RH VFM475 シリンダアッセン	1	INC.1-16
-	234A0-50361		CYL-ASSY,LIFT,RH VFM500 シリンダアッセン	1	INC.1-16
-	234A0-50371		CYL-ASSY,LIFT,RH VFM550 シリンダアッセン	1	INC.1-16
-	234A0-50381		CYL-ASSY,LIFT,RH VFM600 シリンダアッセン	1	INC.1-16
1	234A0-52501		CAP,CYL キャップ	1	
2	210F8-42631	*	O-RING Oリング	1	
3	214A0-53681	*	RING,BACK-UP リング	1	
4	23650-52851	*	U-PACKING Uパッキング	1	
5	23650-52861	*	RING,BACK-UP リング	1	
6	27410-53111	*	SEAL,DUST シール	1	
7	234A0-52511		SLEEVE スリーブ	1	
8	23650-52841		BUSHING ブッシング	1	
9	234A0-52611		PLUG プラグ	1	
10	03190-00006		BALL ボール	1	
11	22580-53321	*	WEARING ウエアリング	1	
12	234A0-50711		TUBE,RH VFM200 チューブ	1	

FIG.217 LIFT CYLINDER (REAR) [VFM39A]

(M5020520) リフトシリンダ(リヤー)

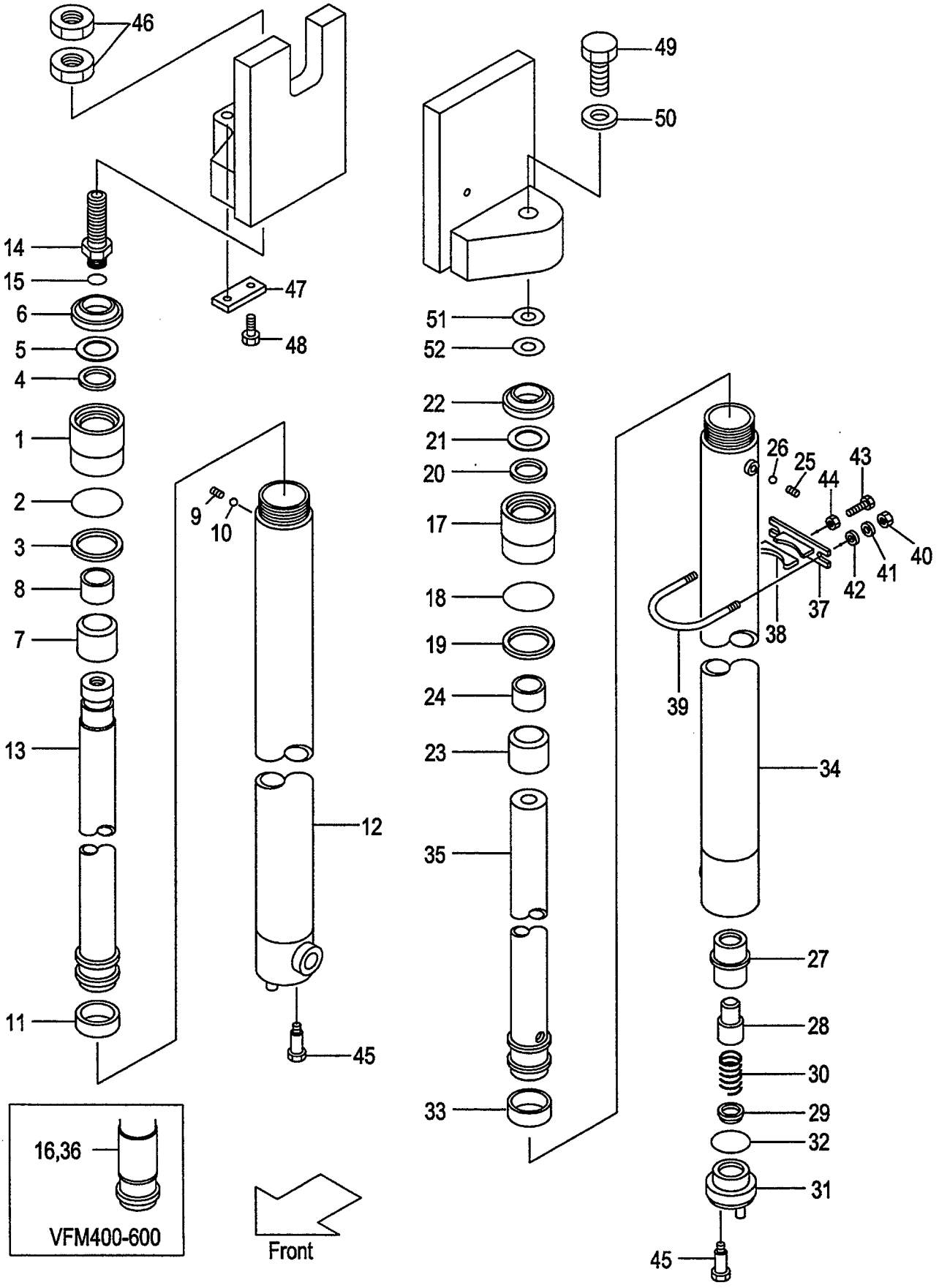

A:VFM39A(2T)
B:VFM39A(2.5T)

Item No	Part No.	Mark	Description	Req'd	Remarks : Serial No.
-	234A0-50721		TUBE,RH VFM225 ﾁｭｰﾌﾞ	1	
-	234A0-50731		TUBE,RH VFM250 ﾁｭｰﾌﾞ	1	
-	234A0-50741		TUBE,RH VFM270 ﾁｭｰﾌﾞ	1	
-	234A0-50751		TUBE,RH VFM275 ﾁｭｰﾌﾞ	1	
-	234A0-50701		TUBE,RH VFM300 ﾁｭｰﾌﾞ	1	
-	234A0-50761		TUBE,RH VFM325 ﾁｭｰﾌﾞ	1	
-	234A0-50771		TUBE,RH VFM330 ﾁｭｰﾌﾞ	1	
-	234A0-50781		TUBE,RH VFM350 ﾁｭｰﾌﾞ	1	
-	234A0-50791		TUBE,RH VFM366 ﾁｭｰﾌﾞ	1	
-	234A0-50801		TUBE,RH VFM370 ﾁｭｰﾌﾞ	1	
-	234A0-50811		TUBE,RH VFM375 ﾁｭｰﾌﾞ	1	
-	234A0-50821		TUBE,RH VFM400 ﾁｭｰﾌﾞ	1	
-	234A0-50831		TUBE,RH VFM425 ﾁｭｰﾌﾞ	1	
-	234A0-50841		TUBE,RH VFM450 ﾁｭｰﾌﾞ	1	
-	234A0-50851		TUBE,RH VFM475 ﾁｭｰﾌﾞ	1	
-	234A0-50861		TUBE,RH VFM500 ﾁｭｰﾌﾞ	1	
-	234A0-50871		TUBE,RH VFM550 ﾁｭｰﾌﾞ	1	
-	234A0-50881		TUBE,RH VFM600 ﾁｭｰﾌﾞ	1	
13	214A0-51711		ROD,PISTON,RH VFM200 ﾛｯﾄﾞ	1	
-	214A0-51721		ROD,PISTON,RH VFM225 ﾛｯﾄﾞ	1	
-	214A0-51731		ROD,PISTON,RH VFM250 ﾛｯﾄﾞ	1	
-	214A0-51741		ROD,PISTON,RH VFM270 ﾛｯﾄﾞ	1	
-	214A0-51751		ROD,PISTON,RH VFM275 ﾛｯﾄﾞ	1	
-	214A0-51701		ROD,PISTON,RH VFM300 ﾛｯﾄﾞ	1	
-	214A0-51761		ROD,PISTON,RH VFM325 ﾛｯﾄﾞ	1	
-	214A0-51771		ROD,PISTON,RH VFM330 ﾛｯﾄﾞ	1	
-	214A0-51781		ROD,PISTON,RH VFM350 ﾛｯﾄﾞ	1	
-	214A0-51791		ROD,PISTON,RH VFM366 ﾛｯﾄﾞ	1	
-	214A0-51801		ROD,PISTON,RH VFM370 ﾛｯﾄﾞ	1	
-	214A0-51811		ROD,PISTON,RH VFM375 ﾛｯﾄﾞ	1	
-	214A0-51821		ROD,PISTON,RH VFM400 ﾛｯﾄﾞ	1	
-	214A0-51831		ROD,PISTON,RH VFM425 ﾛｯﾄﾞ	1	
-	214A0-51841		ROD,PISTON,RH VFM450 ﾛｯﾄﾞ	1	
-	214A0-51851		ROD,PISTON,RH VFM475 ﾛｯﾄﾞ	1	
-	214A0-51861		ROD,PISTON,RH VFM500 ﾛｯﾄﾞ	1	
-	214A0-51871		ROD,PISTON,RH VFM550 ﾛｯﾄﾞ	1	
-	214A0-51881		ROD,PISTON,RH VFM600 ﾛｯﾄﾞ	1	
14	214A0-53721		NIPPLE ﾆｯﾌﾟﾙ	1	
15	03320-00180	*	O-RING Oﾘﾝｸﾞ	1	
16	214A0-53901		SPACER ｽﾍﾟｰｻ	1	(VFM400-500)
-	214A0-53901		SPACER ｽﾍﾟｰｻ	2	(VFM550-600)
A2	234A0-50011		CYL-ASSY,LIFT,LH VFM200 ｼﾘﾝﾀﾞｱｯｾﾝ	1	INC.17-35
-	234A0-50021		CYL-ASSY,LIFT,LH VFM225 ｼﾘﾝﾀﾞｱｯｾﾝ	1	INC.17-35
-	234A0-50031		CYL-ASSY,LIFT,LH VFM250 ｼﾘﾝﾀﾞｱｯｾﾝ	1	INC.17-35
-	234A0-50041		CYL-ASSY,LIFT,LH VFM270 ｼﾘﾝﾀﾞｱｯｾﾝ	1	INC.17-35

FIG.217 LIFT CYLINDER (REAR) [VFM39A]

(M5020520) リフトシリンダ(リヤー)

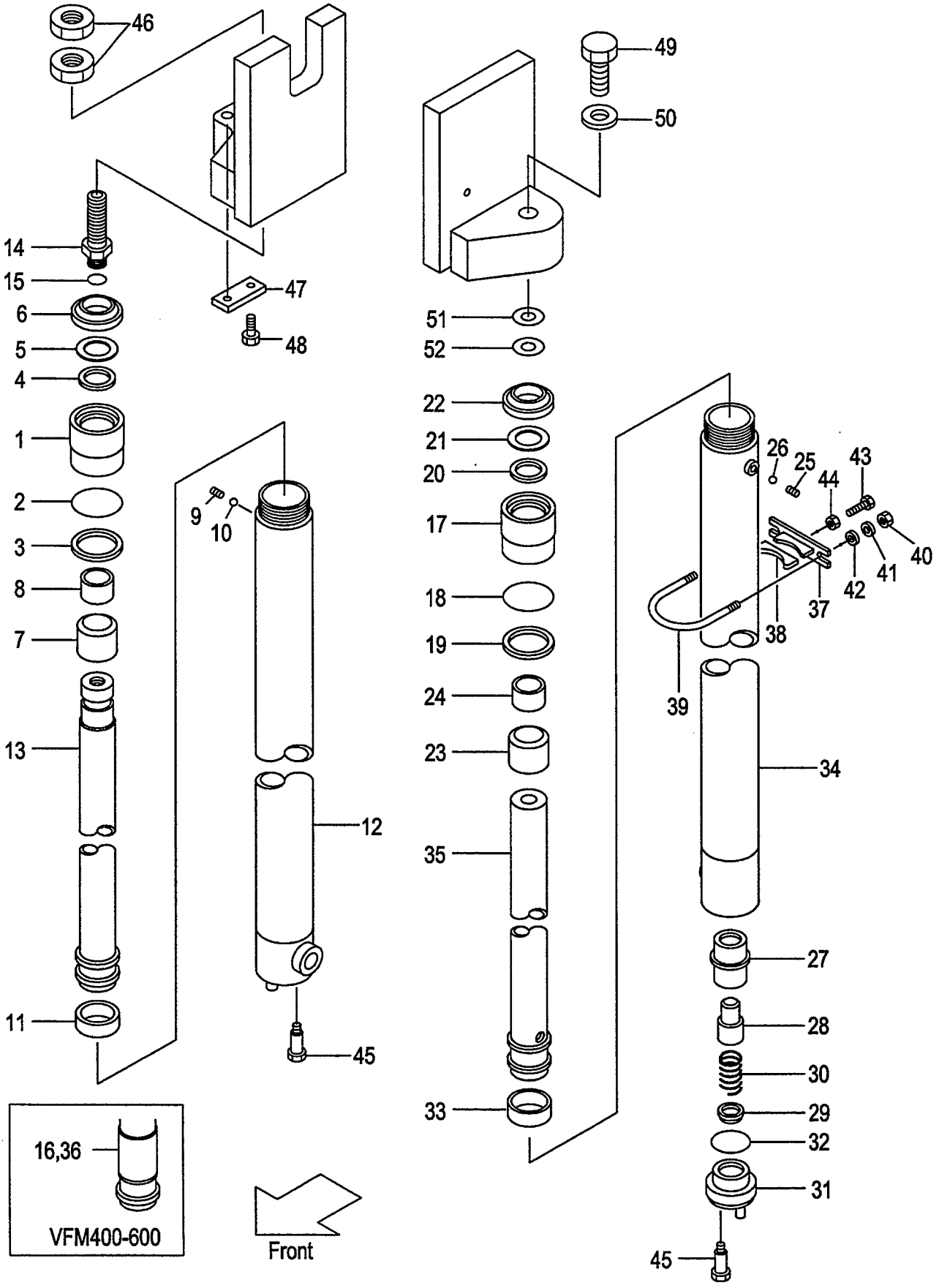

A:VFM39A(2T)
B:VFM39A(2.5T)

FIG.217
(M5020520)

Item No	Part No.	Mark	Description		Req'd	Remarks : Serial No.
-	234A0-50051		CYL-ASSY,LIFT,LH VFM275	シリンダアッセン	1	INC.17-35
-	234A0-50001		CYL-ASSY,LIFT,LH VFM300	シリンダアッセン	1	INC.17-35
-	234A0-50061		CYL-ASSY,LIFT,LH VFM325	シリンダアッセン	1	INC.17-35
-	234A0-50071		CYL-ASSY,LIFT,LH VFM330	シリンダアッセン	1	INC.17-35
-	234A0-50081		CYL-ASSY,LIFT,LH VFM350	シリンダアッセン	1	INC.17-35
-	234A0-50091		CYL-ASSY,LIFT,LH VFM366	シリンダアッセン	1	INC.17-35
-	234A0-50101		CYL-ASSY,LIFT,LH VFM370	シリンダアッセン	1	INC.17-35
-	234A0-50111		CYL-ASSY,LIFT,LH VFM375	シリンダアッセン	1	INC.17-35
-	234A0-50121		CYL-ASSY,LIFT,LH VFM400	シリンダアッセン	1	INC.17-36
-	234A0-50131		CYL-ASSY,LIFT,LH VFM425	シリンダアッセン	1	INC.17-36
-	234A0-50141		CYL-ASSY,LIFT,LH VFM450	シリンダアッセン	1	INC.17-36
-	234A0-50151		CYL-ASSY,LIFT,LH VFM475	シリンダアッセン	1	INC.17-36
-	234A0-50161		CYL-ASSY,LIFT,LH VFM500	シリンダアッセン	1	INC.17-36
-	234A0-50171		CYL-ASSY,LIFT,LH VFM550	シリンダアッセン	1	INC.17-36
-	234A0-50181		CYL-ASSY,LIFT,LH VFM600	シリンダアッセン	1	INC.17-36
17	234A0-52501		CAP,CYL	キャップ	1	
18	210F8-42631	*	O-RING	Oリング	1	
19	214A0-53681	*	RING,BACK-UP	リング	1	
20	23650-52851	*	U-PACKING	Uパッキング	1	
21	23650-52861	*	RING,BACK-UP	リング	1	
22	27410-53111	*	SEAL,DUST	シール	1	
23	234A0-52511		SLEEVE	スリーブ	1	
24	23650-52841		BUSHING	ブッシング	1	
25	234A0-52611		PLUG	プラグ	1	
26	03190-00006		BALL	ボール	1	
27	53658-43021		SLEEVE	スリーブ	1	
28	53658-43011		PISTON	ピストン	1	
29	53658-43001		CHECK	チェック	1	
30	53658-43031		SPRING	スプリング	1	
31	53658-43041		PLUG	プラグ	1	
32	03320-00340	*	O-RING	Oリング	1	
33	22580-53321	*	WEARING	ウエアリング	1	
34	234A0-50511		TUBE,LH VFM200	チューブ	1	
-	234A0-50521		TUBE,LH VFM225	チューブ	1	
-	234A0-50531		TUBE,LH VFM250	チューブ	1	

FIG.217 LIFT CYLINDER (REAR) [VFM39A]

(M5020520) リフトシリンダ(リヤー)

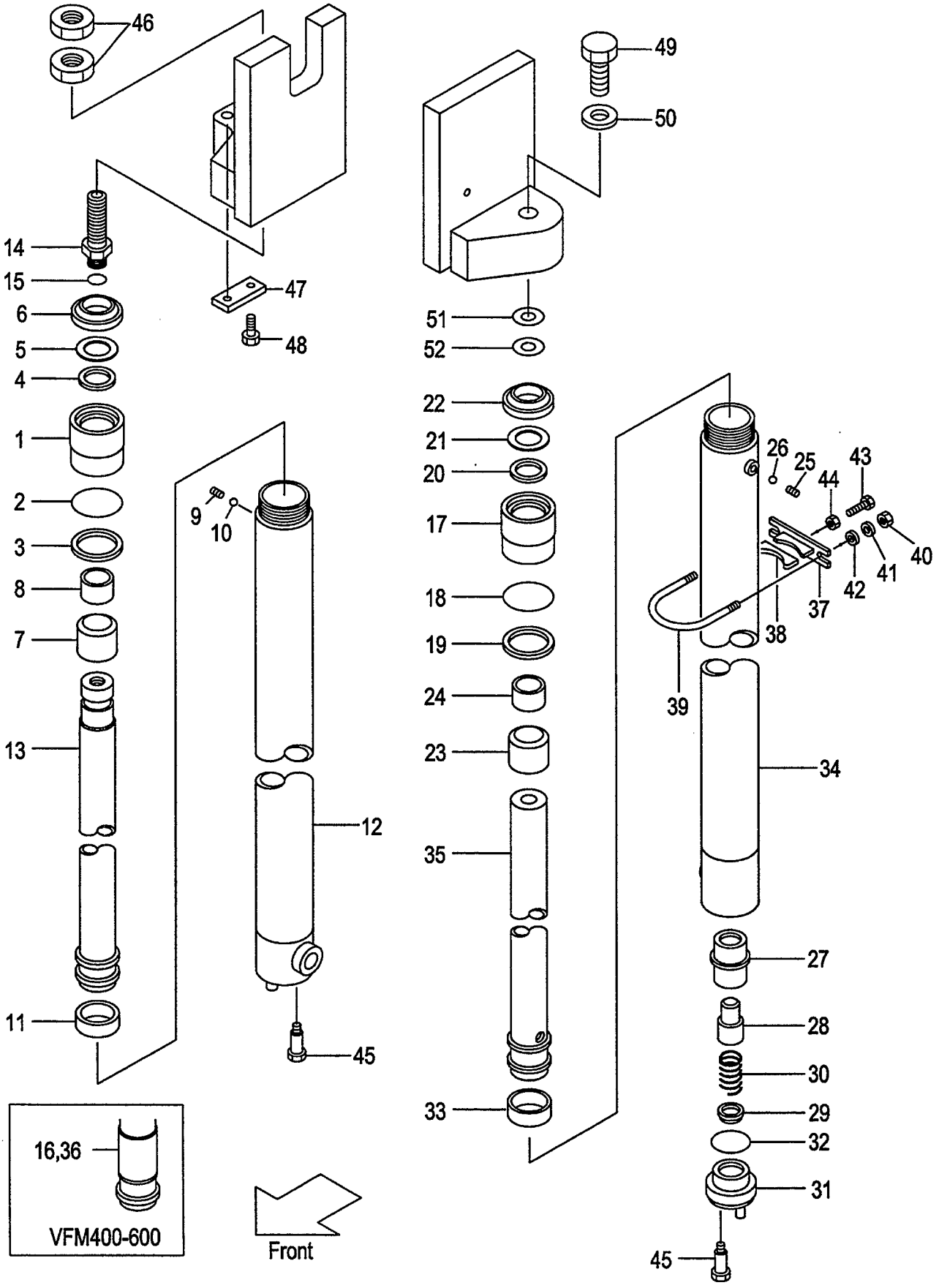

A:VFM39A(2T)
B:VFM39A(2.5T)

FIG.217
(M5020520)

Item No	Part No.	Mark	Description		Req'd	Remarks : Serial No.
-	234A0-50541		TUBE,LH VFM270	ﾁｭｰﾌﾞ	1	
-	234A0-50551		TUBE,LH VFM275	ﾁｭｰﾌﾞ	1	
-	234A0-50501		TUBE,LH VFM300	ﾁｭｰﾌﾞ	1	
-	234A0-50561		TUBE,LH VFM325	ﾁｭｰﾌﾞ	1	
-	234A0-50571		TUBE,LH VFM330	ﾁｭｰﾌﾞ	1	
-	234A0-50581		TUBE,LH VFM350	ﾁｭｰﾌﾞ	1	
-	234A0-50591		TUBE,LH VFM366	ﾁｭｰﾌﾞ	1	
-	234A0-50601		TUBE,LH VFM370	ﾁｭｰﾌﾞ	1	
-	234A0-50611		TUBE,LH VFM375	ﾁｭｰﾌﾞ	1	
-	234A0-50621		TUBE,LH VFM400	ﾁｭｰﾌﾞ	1	
-	234A0-50631		TUBE,LH VFM425	ﾁｭｰﾌﾞ	1	
-	234A0-50641		TUBE,LH VFM450	ﾁｭｰﾌﾞ	1	
-	234A0-50651		TUBE,LH VFM475	ﾁｭｰﾌﾞ	1	
-	234A0-50661		TUBE,LH VFM500	ﾁｭｰﾌﾞ	1	
-	234A0-50671		TUBE,LH VFM550	ﾁｭｰﾌﾞ	1	
-	234A0-50681		TUBE,LH VFM600	ﾁｭｰﾌﾞ	1	
35	229F0-51211		ROD,PISTON,LH VFM200	ﾛｯﾄﾞ	1	
-	229F0-51221		ROD,PISTON,LH VFM225	ﾛｯﾄﾞ	1	
-	229F0-51231		ROD,PISTON,LH VFM250	ﾛｯﾄﾞ	1	
-	229F0-51241		ROD,PISTON,LH VFM270	ﾛｯﾄﾞ	1	
-	229F0-51251		ROD,PISTON,LH VFM275	ﾛｯﾄﾞ	1	
-	229F0-51201		ROD,PISTON,LH VFM300	ﾛｯﾄﾞ	1	
-	229F0-51261		ROD,PISTON,LH VFM325	ﾛｯﾄﾞ	1	
-	229F0-51271		ROD,PISTON,LH VFM330	ﾛｯﾄﾞ	1	
-	229F0-51281		ROD,PISTON,LH VFM350	ﾛｯﾄﾞ	1	
-	229F0-51291		ROD,PISTON,LH VFM366	ﾛｯﾄﾞ	1	
-	229F0-51301		ROD,PISTON,LH VFM370	ﾛｯﾄﾞ	1	
-	229F0-51311		ROD,PISTON,LH VFM375	ﾛｯﾄﾞ	1	
-	229F0-51321		ROD,PISTON,LH VFM400	ﾛｯﾄﾞ	1	
-	229F0-51331		ROD,PISTON,LH VFM425	ﾛｯﾄﾞ	1	
-	229F0-51341		ROD,PISTON,LH VFM450	ﾛｯﾄﾞ	1	
-	229F0-51351		ROD,PISTON,LH VFM475	ﾛｯﾄﾞ	1	
-	229F0-51361		ROD,PISTON,LH VFM500	ﾛｯﾄﾞ	1	
-	229F0-51371		ROD,PISTON,LH VFM550	ﾛｯﾄﾞ	1	
-	229F0-51381		ROD,PISTON,LH VFM600	ﾛｯﾄﾞ	1	
36	214A0-53901		SPACER	ｽﾍﾟｰｻ	1	(VFM400-500)
-	214A0-53901		SPACER	ｽﾍﾟｰｻ	2	(VFM550-600)
A3	215E8-42171		SUPPORT-ASSY	ｻﾎﾟｰﾄｱｯｾﾝ	2	INC.37,38
37	215E8-42181		SUPPORT	ｻﾎﾟｰﾄ	1	
38	24868-42111		RUBBER	ﾗﾊﾞｰ	1	
39	234A8-42551		U-BOLT	Uﾎﾞﾙﾄ	2	
40	234A8-42561		NUT	ﾅｯﾄ	4	
41	02010-20010		WASHER	ﾜｯｼｬ	4	
42	02000-20010		WASHER	ﾜｯｼｬ	4	
43	232A8-42201		BOLT	ﾎﾞﾙﾄ	2	
44	234A8-42571		NUT	ﾅｯﾄ	2	
45	214A8-42661		BOLT	ﾎﾞﾙﾄ	2	
46	24320-52001		NUT,RH	ﾅｯﾄ	2	
47	23648-50161		PLATE,KEY,RH	ﾌﾟﾚｰﾄ	1	
48	01184-10020		BOLT,RH	ﾎﾞﾙﾄ	2	

FIG.217 LIFT CYLINDER (REAR) [VFM39A]

(M5020520) リフトシリンダ(リヤー)

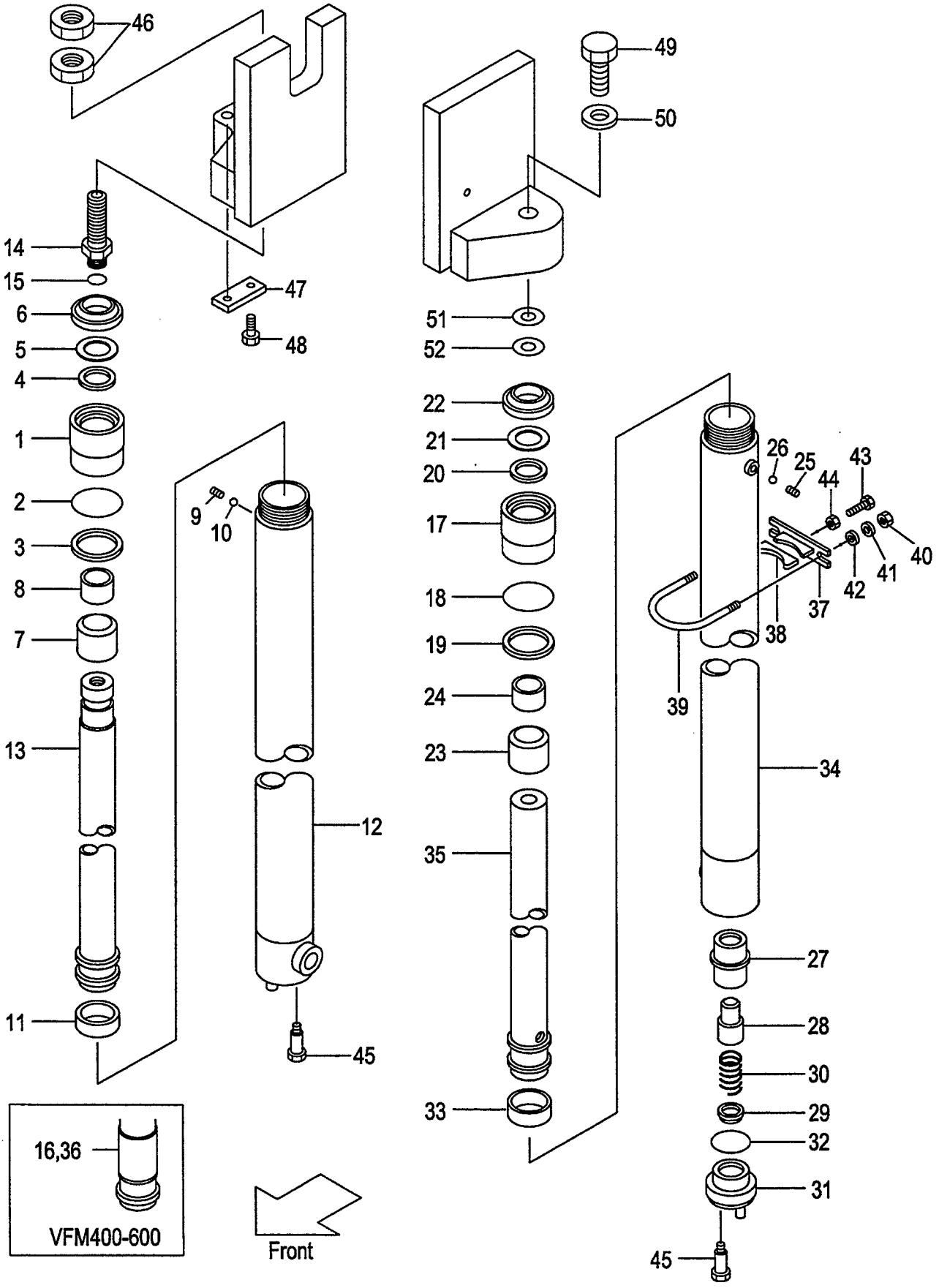

A:VFM39A(2T)
B:VFM39A(2.5T)

FIG.217
(M5020520)

Item No	Part No.	Mark	Description		Req'd	Remarks : Serial No.
49	01103-14040		BOLT,LH	ﾎﾞﾙﾄ	1	
50	02011-00014		WASHER,LH	ﾜｯｼｬ	1	
51	23917-42191		SHIM,T-1.0,LH	ｼﾑ	5	
52	22679-43831		SHIM,T-0.2,LH	ｼﾑ	5	
K1	214A0-59821		KIT,OVERHAUL	ｵｰﾊﾞｰﾎｰﾙｷｯﾄ	1	INC.2-6,11,15,18-22,32,33

FIG.218 MAST PIPING [VFM39A]

(M5020530) マストパイピング

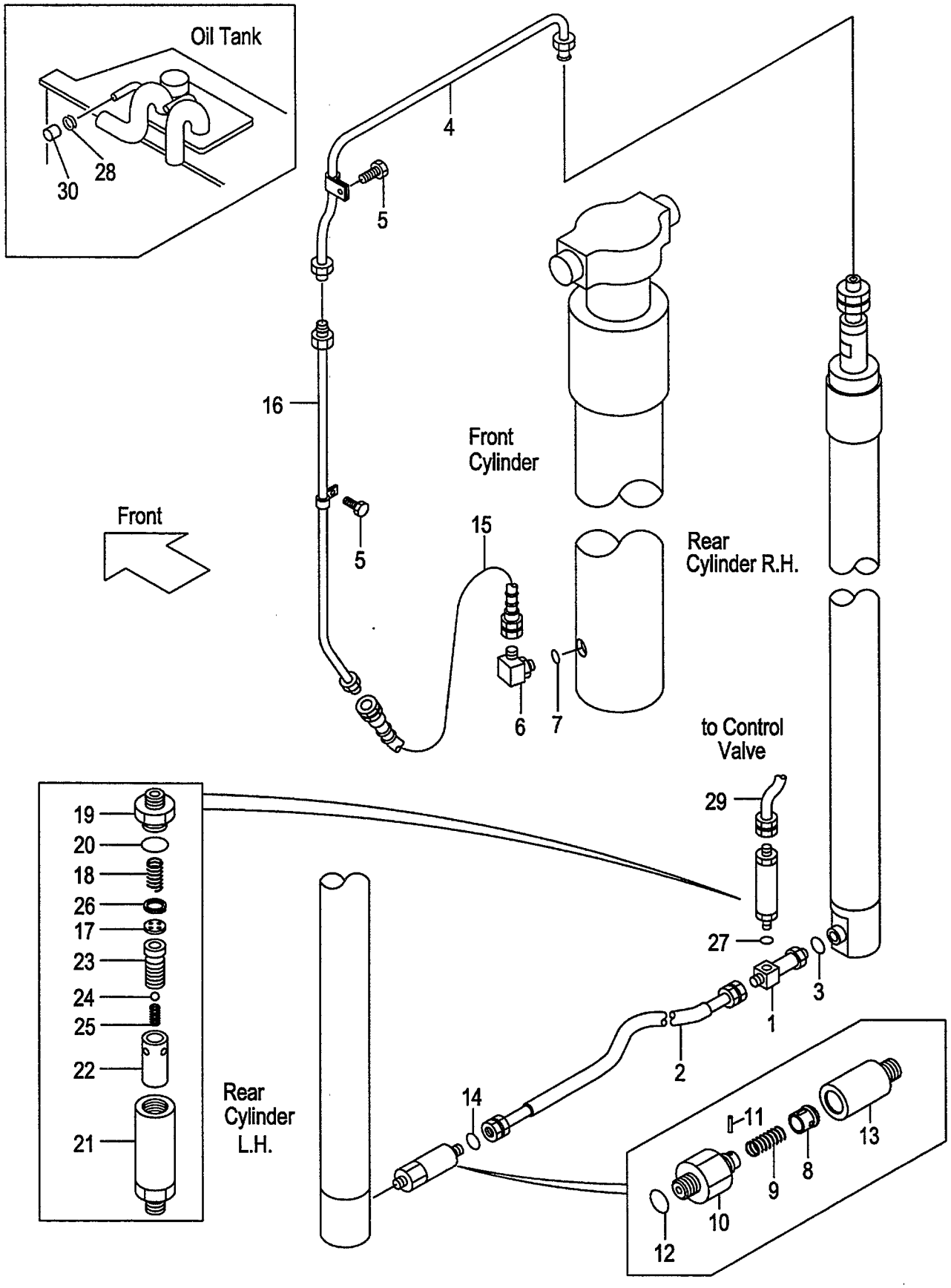

A:VFM39A(2T)
B:VFM39A(2.5T)

FIG.218
(M5020530)

Item No	Part No.	Mark	Description		Req'd	Remarks : Serial No.
A1	234A8-41101		THREE-WAY-ASSY	ｽﾘｰｳｪｲｱｯｾﾝ	1	INC.1,3
1	NO PART NO.	#	THREE-WAY	ｽﾘｰｳｪｲ	1	
2	277T0-62071		HOSE	ﾎｰｽ	1	
3	03320-00140		O-RING	Oﾘﾝｸﾞ	1	
4	232A0-62001		PIPE	ﾊﾟｲﾌﾟ	1	
5	01183-06016		BOLT	ﾎﾞﾙﾄ	2	
A2	229F0-91001		ELBOW-ASSY	ｴﾙﾎﾞｱｯｾﾝ	1	INC.6,7
6	NO PART NO.	#	ELBOW	ｴﾙﾎﾞ	1	
7	03320-00240		O-RING	Oﾘﾝｸﾞ	1	
A3	234A0-62051		VALVE-ASSY,CUT	ｶｯﾄﾊﾞﾙﾌﾞｱｯｾﾝ	1	INC.8-14
A4	234A8-40701		VALVE- SUB-ASSY,CUT	ｶｯﾄﾊﾞﾙﾌﾞｻﾌﾞｱｯｾﾝ	1	INC.8-12
8	234A8-42602		PISTON	ﾋﾟｽﾄﾝ	1	
9	234A8-42611		SPRING	ｽﾌﾟﾘﾝｸﾞ	1	
10	234A8-42622		NIPPLE	ﾆｯﾌﾟﾙ	1	
11	02270-01014		PIN	ﾋﾟﾝ	1	
12	03320-00140		O-RING	Oﾘﾝｸﾞ	1	
13	234A0-62111		ADAPTER	ｱﾀﾞﾌﾟﾀ	1	
14	03320-00140		O-RING	Oﾘﾝｸﾞ	1	
15	214A0-62151		HOSE	ﾎｰｽ	1	
16	277P0-60301		PIPE VFM200	ﾊﾟｲﾌﾟ	1	
-	277P0-60311		PIPE VFM225	ﾊﾟｲﾌﾟ	1	
-	277P0-60321		PIPE VFM250	ﾊﾟｲﾌﾟ	1	
-	277P0-60331		PIPE VFM270	ﾊﾟｲﾌﾟ	1	
-	277P0-60341		PIPE VFM275	ﾊﾟｲﾌﾟ	1	
-	277P0-60351		PIPE VFM300	ﾊﾟｲﾌﾟ	1	
-	277P0-60361		PIPE VFM325	ﾊﾟｲﾌﾟ	1	
-	277P0-60371		PIPE VFM330	ﾊﾟｲﾌﾟ	1	
-	277P0-60381		PIPE VFM350	ﾊﾟｲﾌﾟ	1	
-	277P0-60391		PIPE VFM366	ﾊﾟｲﾌﾟ	1	
-	277P0-60401		PIPE VFM370	ﾊﾟｲﾌﾟ	1	
-	277P0-60411		PIPE VFM375	ﾊﾟｲﾌﾟ	1	
-	277P0-60421		PIPE VFM400	ﾊﾟｲﾌﾟ	1	
-	277P0-60431		PIPE VFM425	ﾊﾟｲﾌﾟ	1	
-	277P0-60441		PIPE VFM450	ﾊﾟｲﾌﾟ	1	
-	277P0-60451		PIPE VFM475	ﾊﾟｲﾌﾟ	1	
-	277P0-60461		PIPE VFM500	ﾊﾟｲﾌﾟ	1	
-	277P0-60471		PIPE VFM550	ﾊﾟｲﾌﾟ	1	
-	277P0-60481		PIPE VFM600	ﾊﾟｲﾌﾟ	1	
A5	234A8-41001		REGULATOR-ASSY	ﾚｷﾞｭﾚｰﾀｱｯｾﾝ	1	INC.17-26
17	NO PART NO.	#	PLATE	ﾌﾟﾚｰﾄ	1	
18	27979-43101		SPRING	ｽﾌﾟﾘﾝｸﾞ	1	
19	NO PART NO.	#	NIPPLE	ﾆｯﾌﾟﾙ	1	
20	03320-00280		O-RING	Oﾘﾝｸﾞ	1	
21	NO PART NO.	#	CASE	ｹｰｽ	1	
22	NO PART NO.	#	SLEEVE	ｽﾘｰﾌﾞ	1	
23	NO PART NO.	#	PISTON	ﾋﾟｽﾄﾝ	1	
24	24459-42951		BALL	ﾎﾞｰﾙ	1	
25	214A8-44151		SPRING	ｽﾌﾟﾘﾝｸﾞ	1	
26	02110-00018		RING,SNAP	ｽﾅｯﾌﾟﾘﾝｸﾞ	1	
27	03320-00180		O-RING	Oﾘﾝｸﾞ	1	

FIG.218 MAST PIPING [VFM39A]

(M5020530) マストパイピング

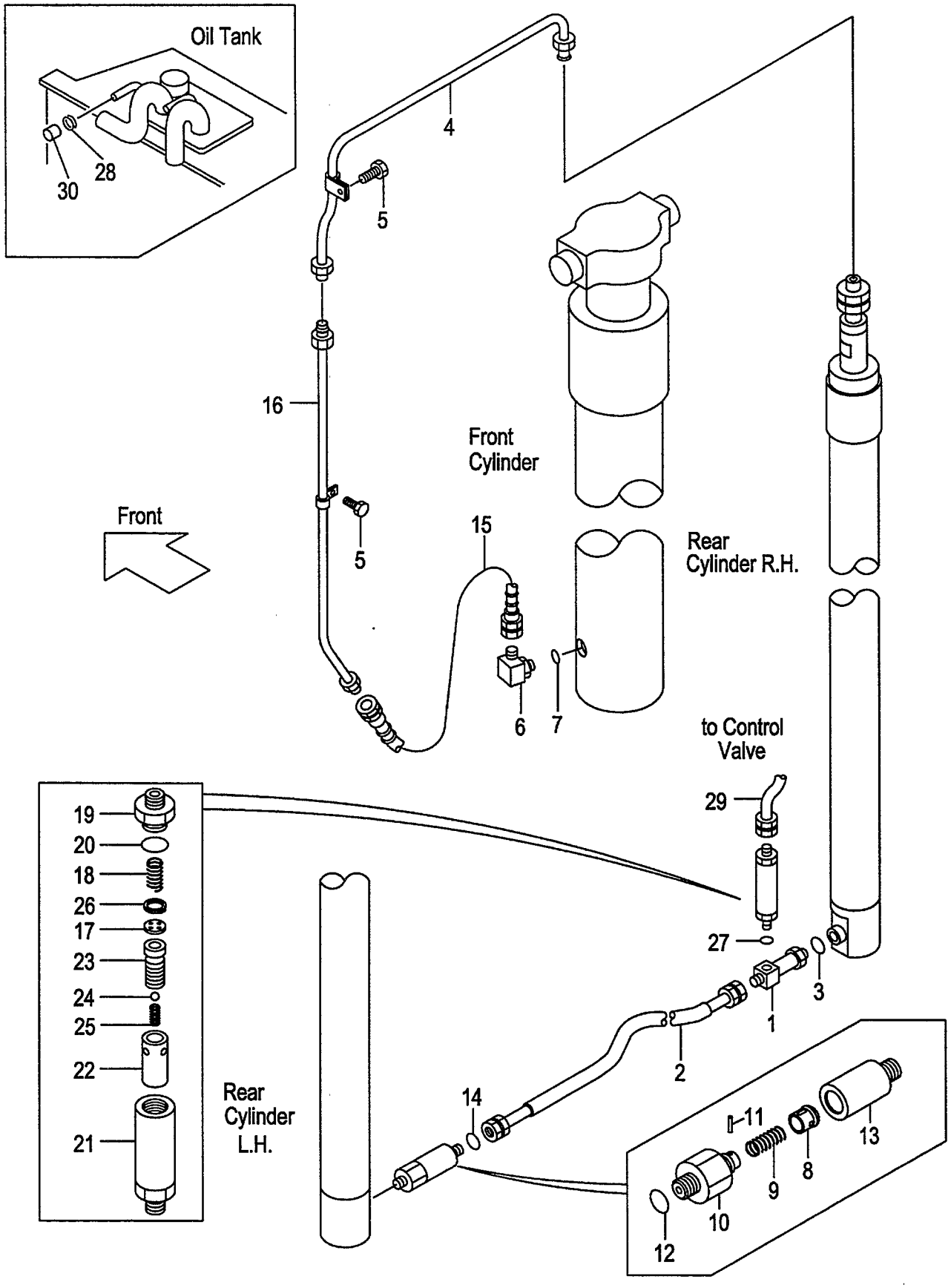

A:VFM39A(2T)
B:VFM39A(2.5T)

FIG.218
(M5020530)

Item No	Part No.	Mark	Description		Req'd	Remarks : Serial No.
28	04914-00019		CLIP	ｸﾘｯﾌﾟ	1	
29	239A8-42001		HOSE	ﾎｰｽ	1	
30	55593-62551		CAP	ｷｬｯﾌﾟ	1	

FIG.219 FORK[VFHM39A]

(M5028150) フォーク

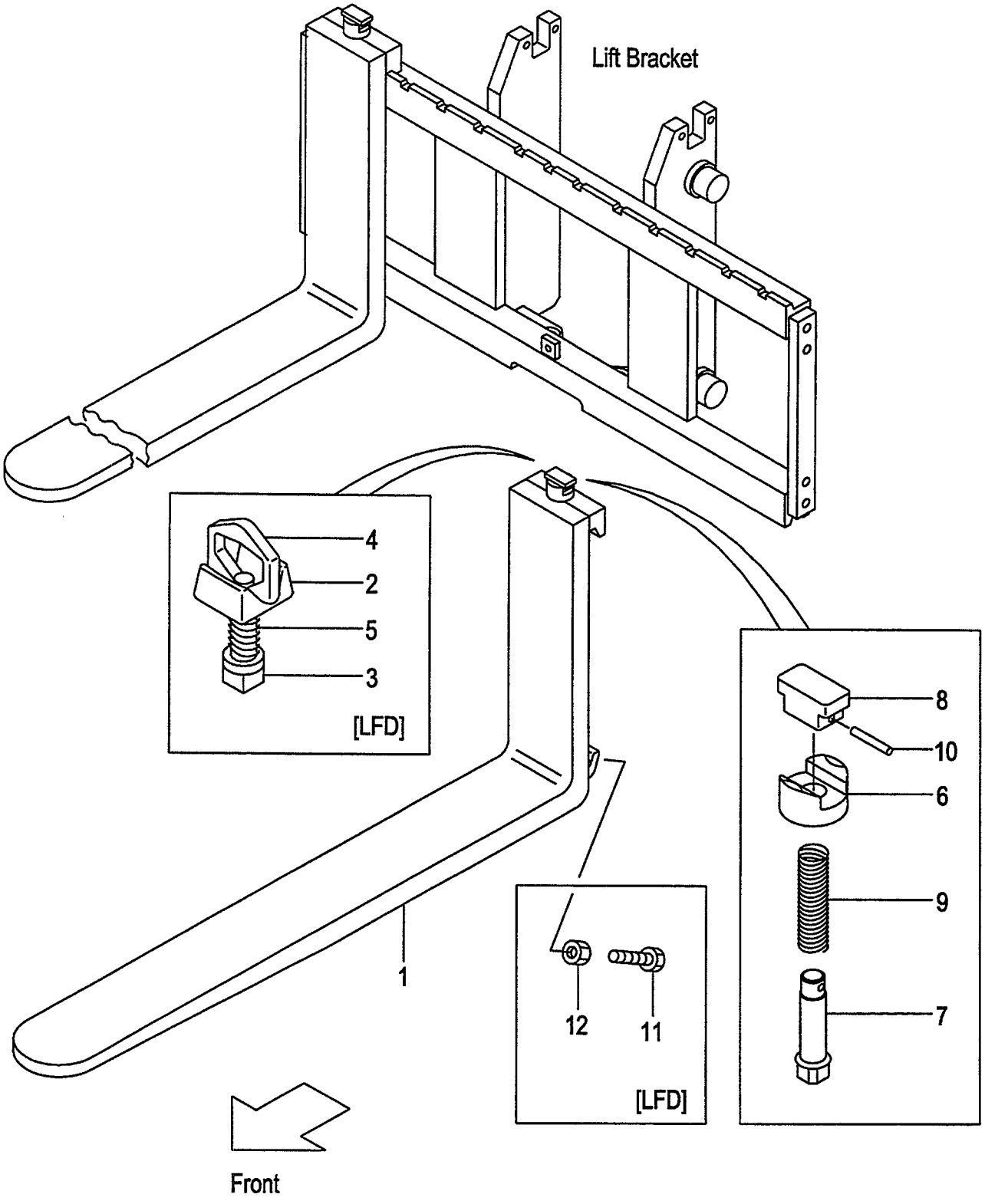

A:VFHM39A(2T)
B:VFHM39A(2.5T)

FIG.219
(M5028150)

Item No	Part No.	Mark	Description		Req'd	Remarks : Serial No.
1	231A8-10101		FORK	ﾌｫｰｸ	2	A (L=920) INC.6-10
-	214A8-10512		FORK	ﾌｫｰｸ	2	B (L=1070) INC.6-10
-	214A8-10512		FORK	ﾌｫｰｸ	2	[EX] INC.6-10
-	231A8-10171		FORK	ﾌｫｰｸ	2	A [LF090] INC.6-10
-	231F8-10571		FORK	ﾌｫｰｸ	2	B [LF090] INC.6-10
-	231A8-10101		FORK	ﾌｫｰｸ	2	A [LF092] INC.6-10
-	231F8-10501		FORK	ﾌｫｰｸ	2	B [LF092] INC.6-10
-	214A8-10582		FORK	ﾌｫｰｸ	2	[LF100] INC.6-10
-	214A8-10512		FORK	ﾌｫｰｸ	2	[LF107] INC.6-10
-	214A8-10592		FORK	ﾌｫｰｸ	2	[LF110] INC.6-10
-	214A8-10602		FORK	ﾌｫｰｸ	2	[LF120] INC.6-10
-	214A8-10522		FORK	ﾌｫｰｸ	2	[LF122] INC.6-10
-	214A8-10612		FORK	ﾌｫｰｸ	2	[LF130] INC.6-10
-	214A8-10532		FORK	ﾌｫｰｸ	2	[LF137] INC.6-10
-	214A8-10622		FORK	ﾌｫｰｸ	2	[LF140] INC.6-10
-	214A8-10632		FORK	ﾌｫｰｸ	2	[LF150] INC.6-10
-	214A8-10542		FORK	ﾌｫｰｸ	2	[LF152] INC.6-10
-	214A8-10642		FORK	ﾌｫｰｸ	2	[LF160] INC.6-10
-	214A8-10552		FORK	ﾌｫｰｸ	2	[LF167] INC.6-10
-	214A8-10653		FORK	ﾌｫｰｸ	2	[LF170] INC.6-10
-	214A8-10663		FORK	ﾌｫｰｸ	2	[LF180] INC.6-10
-	214A8-10563		FORK	ﾌｫｰｸ	2	[LF182] INC.6-10
-	214A8-10673		FORK	ﾌｫｰｸ	2	[LF190] INC.6-10
-	214A8-10683		FORK	ﾌｫｰｸ	2	[LF200] INC.6-10
-	234A8-10571		FORK	ﾌｫｰｸ	2	[LFD090] INC.2-5
-	234A8-10501		FORK	ﾌｫｰｸ	2	[LFD092] INC.2-5
-	234A8-10581		FORK	ﾌｫｰｸ	2	[LFD100] INC.2-5
-	234A8-10511		FORK	ﾌｫｰｸ	2	[LFD107] INC.2-5
-	234A8-10591		FORK	ﾌｫｰｸ	2	[LFD110] INC.2-5
-	234A8-10601		FORK	ﾌｫｰｸ	2	[LFD120] INC.2-5
-	234A8-10521		FORK	ﾌｫｰｸ	2	[LFD122] INC.2-5
-	234A8-10611		FORK	ﾌｫｰｸ	2	[LFD130] INC.2-5
-	234A8-10531		FORK	ﾌｫｰｸ	2	[LFD137] INC.2-5
-	234A8-10621		FORK	ﾌｫｰｸ	2	[LFD140] INC.2-5
-	234A8-10631		FORK	ﾌｫｰｸ	2	[LFD150] INC.2-5
-	234A8-10541		FORK	ﾌｫｰｸ	2	[LFD152] INC.2-5
-	234A8-10641		FORK	ﾌｫｰｸ	2	[LFD160] INC.2-5
-	234A8-10551		FORK	ﾌｫｰｸ	2	[LFD167] INC.2-5
-	234A8-10652		FORK	ﾌｫｰｸ	2	[LFD170] INC.2-5
-	234A8-10662		FORK	ﾌｫｰｸ	2	[LFD180] INC.2-5
-	234A8-10562		FORK	ﾌｫｰｸ	2	[LFD182] INC.2-5
-	234A8-10672		FORK	ﾌｫｰｸ	2	[LFD190] INC.2-5
-	234A8-10682		FORK	ﾌｫｰｸ	2	[LFD200] INC.2-5
A1	214A8-11001		STOPPER-ASSY,FORK	ｽﾄｯﾊﾟｱｯｾﾝ	2	[LFD] INC.2-5

FIG.219 FORK[VFHM39A]

(M5028150) フォーク

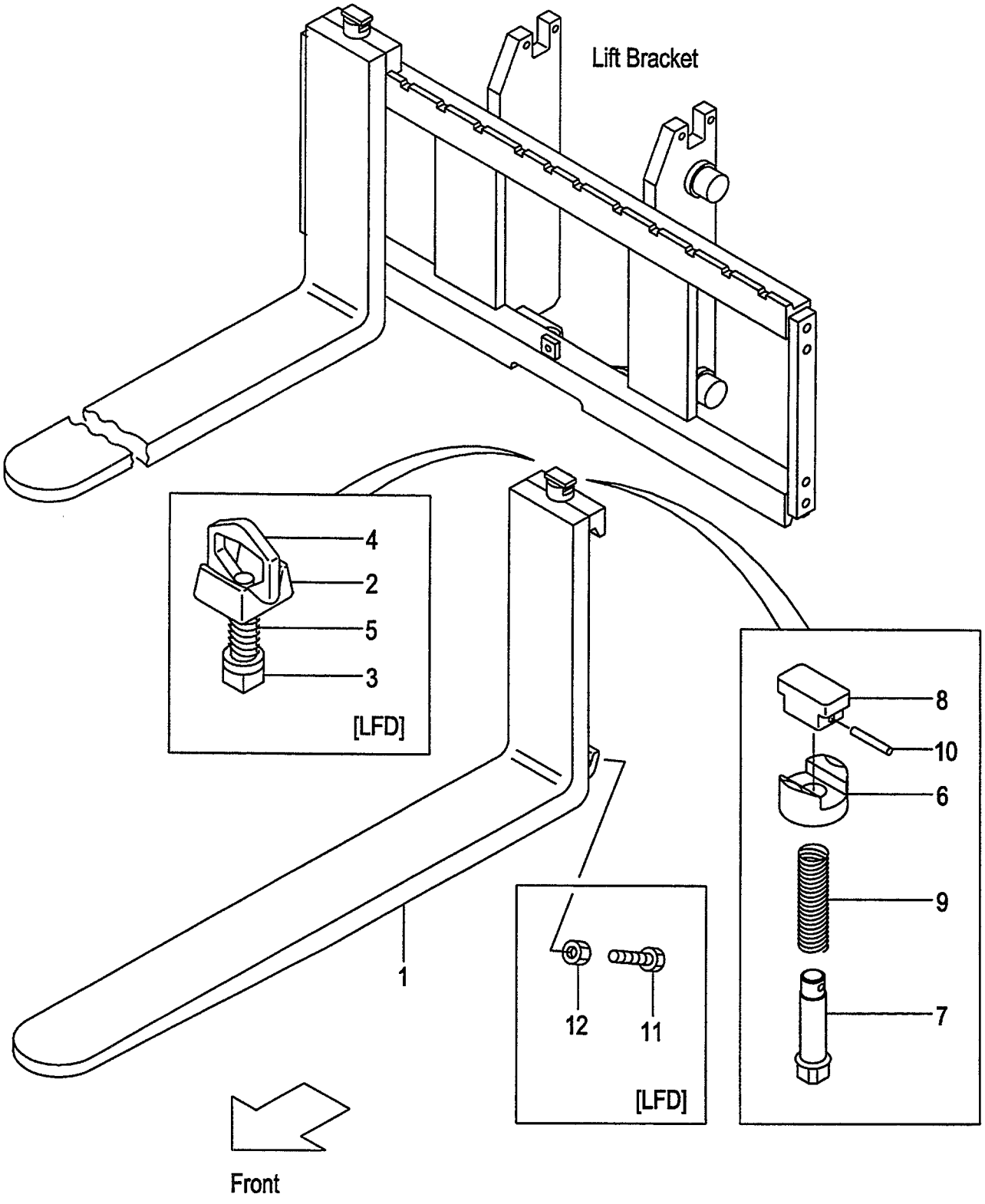

A:VFHM39A(2T)
B:VFHM39A(2.5T)

FIG.219
(M5028150)

Item No	Part No.	Mark	Description		Req'd	Remarks : Serial No.
2	214A8-12001		HEAD	ﾍｯﾄﾞ	2	[LFD]
3	214A8-12011		STOPPER	ｽﾄｯﾊﾟ	2	[LFD]
4	214A8-12021		HANDLE	ﾊﾝﾄﾞﾙ	2	[LFD]
5	214A8-12031		SPRING	ｽﾌﾟﾘﾝｸﾞ	2	[LFD]
6	216G8-12921		HOLDER	ﾎﾙﾀﾞ	2	[LF]
7	231A8-12001		PIN	ﾋﾟﾝ	2	[LF]
8	231A8-12011		KNOB	ﾉﾌﾞ	2	[LF]
9	231A8-12021		SPRING	ｽﾌﾟﾘﾝｸﾞ	2	[LF]
10	231A8-12031		PIN,SPRING	ﾋﾟﾝ	2	[LF]
11	216G8-12101		BOLT	ﾎﾞﾙﾄ	4	[LFD]
12	01402-00010		NUT	ﾅｯﾄ	4	[LFD]

FIG.220 LIFT BRACKET[VFHM39A]

(M5020910) ﾘﾌﾄﾌﾞﾗｹｯﾄ

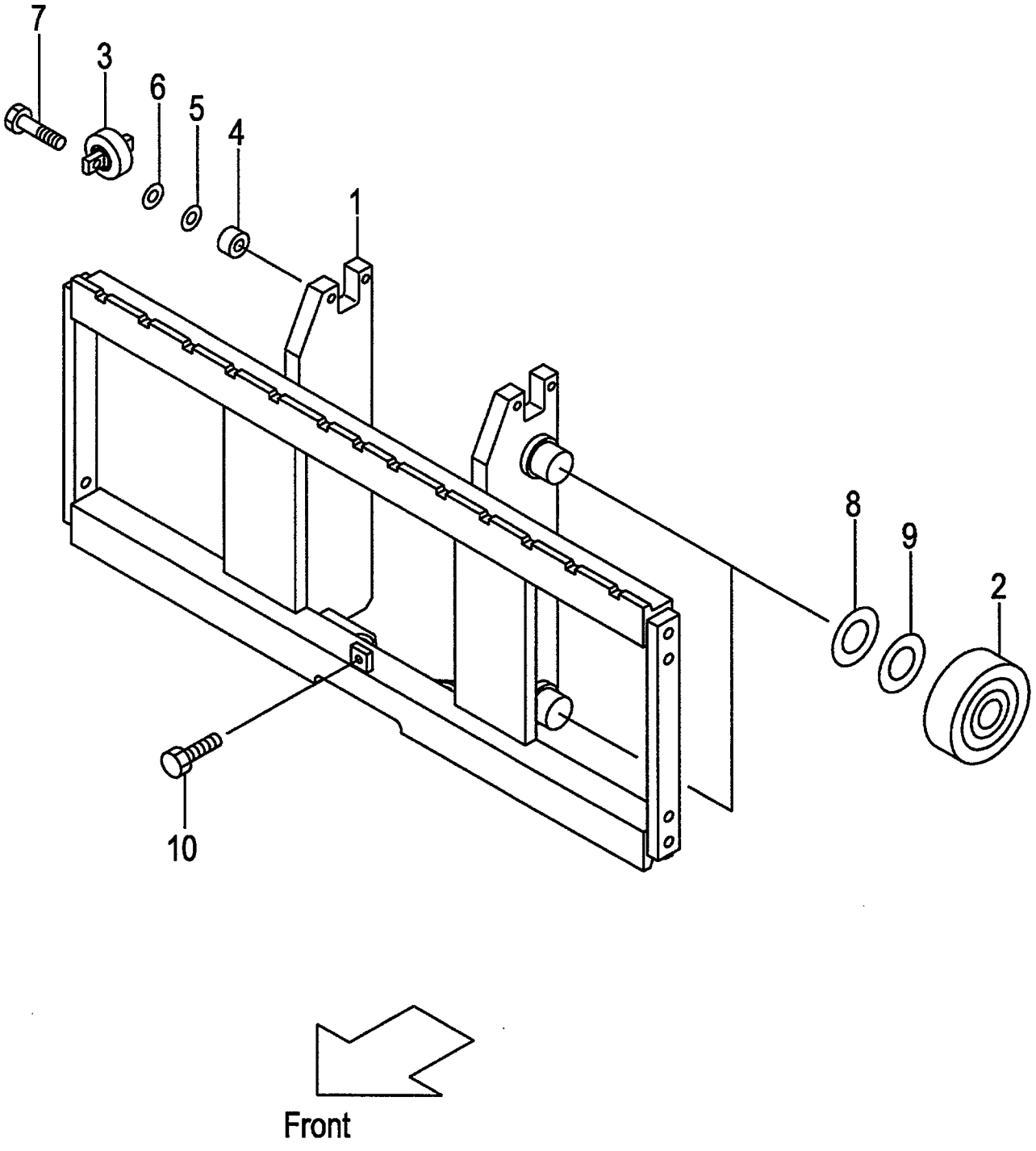

A:VFHM39A(2T)
B:VFHM39A(2.5T)

Item No	Part No.	Mark	Description		Req'd	Remarks : Serial No.
1	239A0-90101		BRACKET,LIFT	ﾌﾞﾗｹｯﾄ	1	
-	539A1-64201		BRACKET,LIFT	ﾌﾞﾗｹｯﾄ	1	[WFY110][WFY114][WFY127] [WFY135][WFY138]
-	539A1-64211		BRACKET,LIFT(L)	ﾌﾞﾗｹｯﾄ	1	[WFY135][WFY138][WFY145] [WFY146][WFY154][WFY180]
2	277P8-22051		ROLLER,END	ﾛｰﾗ	4	
-	277P8-22061		ROLLER,END	ﾛｰﾗ	(4)	
-	577P3-74001		ROLLER,END	ﾛｰﾗ	4	[FC][CS35][FCS35][FCS45] [FCS55]
-	577P3-74011		ROLLER,END	ﾛｰﾗ	(4)	[FC][CS35][FCS35][FCS45] [FCS55]
3	23458-32052		ROLLER,SIDE	ﾛｰﾗ	2	
-	514A3-71702		ROLLER,SIDE	ﾛｰﾗ	2	[FC][CS35][FCS35][FCS45] [FCS55]
4	22548-34031		SPACER	ｽﾍﾟｰｻ	4	
5	22548-34051		SHIM,T-0.5	ｼﾑ	5	
6	22548-34061		SHIM,T-1.0	ｼﾑ	5	
7	01184-12040		BOLT & WASHER	ﾎﾞﾙﾄ&ﾜｯｼｬ	4	
8	277P8-22071		SHIM,T-0.5	ｼﾑ	10	
9	277P8-22081		SHIM,T-1.0	ｼﾑ	10	
10	01184-12025		BOLT & WASHER	ﾎﾞﾙﾄ&ﾜｯｼｬ	1	
11	214A0-93001	+	CHART,CAPACITY	ﾁｬｰﾄ	1	A (VFHM360-500)
-	214A0-93011	+	CHART,CAPACITY	ﾁｬｰﾄ	1	A (VFHM540-750)
-	214A0-93101	+	CHART,CAPACITY	ﾁｬｰﾄ	1	B (VFHM360-500)
-	214A0-93111	+	CHART,CAPACITY	ﾁｬｰﾄ	1	B (VFHM540-750)
-	214A0-93031	+	CHART,CAPACITY	ﾁｬｰﾄ	1	A [VFHM360-500/EXA]
-	214A0-93041	+	CHART,CAPACITY	ﾁｬｰﾄ	1	A [VFHM540-750/EXA]
-	214A0-93131	+	CHART,CAPACITY	ﾁｬｰﾄ	1	B [VFHM360-500/EXA]
-	214A0-93141	+	CHART,CAPACITY	ﾁｬｰﾄ	1	B [VFHM540-750/EXA]
-	514A3-82301	+	CHART,CAPACITY	ﾁｬｰﾄ	1	[EXB][EXC][EXE][EXN]
-	514A3-82321	+	CHART,CAPACITY	ﾁｬｰﾄ	1	[EXD]
-	524T3-84031	+	CHART,CAPACITY	ﾁｬｰﾄ	1	[EXR]
-	63110-18921	+	CHART,CAPACITY	ﾁｬｰﾄ	1	[EXB/CNP]
-	514A3-82341	+	CHART,CAPACITY	ﾁｬｰﾄ	1	[EXB/FNP][EXE/FNP]
-	514A3-82331	+	CHART,CAPACITY	ﾁｬｰﾄ	1	[EXB/SNP][EXE/SNP]
-	514A3-82361	+	CHART,CAPACITY	ﾁｬｰﾄ	1	[EXEEC/DNP][EXNEC/DNP]
-	514A3-82381	+	CHART,CAPACITY	ﾁｬｰﾄ	1	[EXEEC/GNP]
-	514A3-82371	+	CHART,CAPACITY	ﾁｬｰﾄ	1	[EXEEC/INP]
-	514A3-82351	+	CHART,CAPACITY	ﾁｬｰﾄ	1	[EXEEC/ONP]
-	514A3-82391	+	CHART,CAPACITY	ﾁｬｰﾄ	1	[EXEEC/PNP]
-	529F3-82101	+	CHART,CAPACITY	ﾁｬｰﾄ	1	[EXNEC/FINP]
-	529F3-82111	+	CHART,CAPACITY	ﾁｬｰﾄ	1	[EXNEC/SENP]

FIG.220 LIFT BRACKET[VFHM39A]

(M5020910) ﾘﾌﾄﾌﾞﾗｹｯﾄ

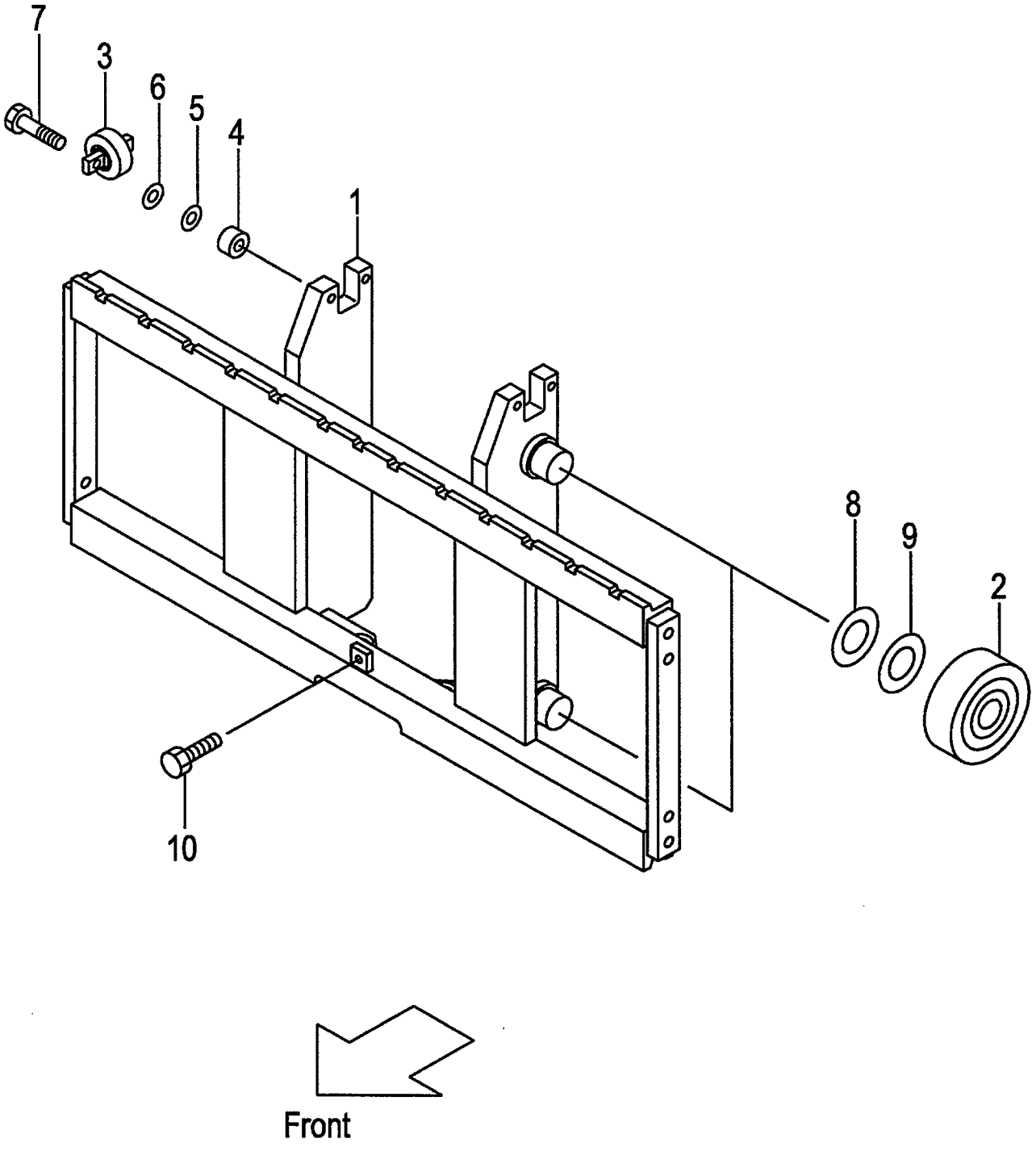

A:VFHM39A(2T)
B:VFHM39A(2.5T)

FIG.220
(M5020910)

Item No	Part No.	Mark	Description	Req'd	Remarks : Serial No.
12	02432-01008	+	RIVET リベット	4	

FIG.221 BACKREST[VFHM91A]

(M5028270) ﾊﾞｯｸﾚｽﾄ

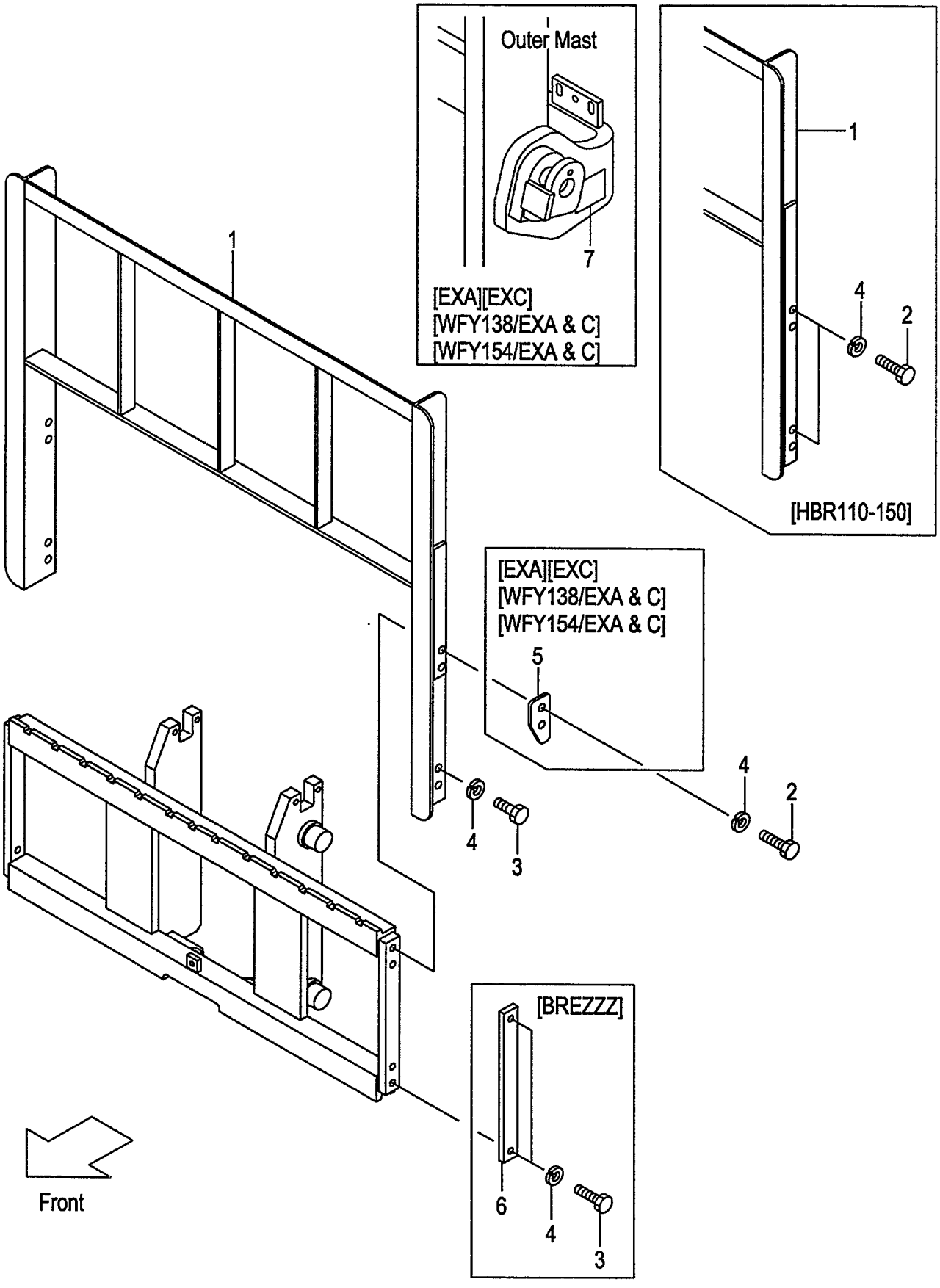

A:VFHM39A(2T)
B:VFHM39A(2.5T)

FIG.221
(M5028270)

Item No	Part No.	Mark	Description		Req'd	Remarks : Serial No.
1	234A8-22202		BACKREST	ﾊﾞｯｸﾚｽﾄ	1	(WITHOUT BREZZZ)
-	534A2-74001		BACKREST	ﾊﾞｯｸﾚｽﾄ	1	[EXA][EXC]
-	239A8-20101		BACKREST	ﾊﾞｯｸﾚｽﾄ	1	[HBR110]
-	239A8-22111		BACKREST	ﾊﾞｯｸﾚｽﾄ	1	[HBR120]
-	239A8-20121		BACKREST	ﾊﾞｯｸﾚｽﾄ	1	[HBR130]
-	239A8-20131		BACKREST	ﾊﾞｯｸﾚｽﾄ	1	[HBR140]
-	239A8-20141		BACKREST	ﾊﾞｯｸﾚｽﾄ	1	[HBR150]
-	534A1-64402		BACKREST	ﾊﾞｯｸﾚｽﾄ	1	[WFY135]
-	534A1-64412		BACKREST	ﾊﾞｯｸﾚｽﾄ	1	[WFY146]
-	534A2-74101		BACKREST	ﾊﾞｯｸﾚｽﾄ	1	[WFY135/EXA][WFY135/EXC]
-	534A2-74201		BACKREST	ﾊﾞｯｸﾚｽﾄ	1	[WFY146/EXA][WFY146/EXC]
2	01100-14030		BOLT	ﾎﾞﾙﾄ	4	(WITHOUT BREZZZ)
-	01100-14035		BOLT	ﾎﾞﾙﾄ	4	[EXA][EXC][WFY135/EXA&C] [WFY146/EXA&C]
-	01100-14030		BOLT	ﾎﾞﾙﾄ	8	[HBR110-150]
3	01100-14025		BOLT	ﾎﾞﾙﾄ	4	(WITHOUT HBR110-150)
4	02010-00014		WASHER	ﾜｯｼｬ	8	
-	02010-00014		WASHER	ﾜｯｼｬ	4	[BREZZZ]
5	534A2-74051		PLATE,STOPPER	ﾌﾟﾚｰﾄ	2	[EXA][EXC][WFY135/EXA&C] [WFY146/EXA&C]
6	23659-42161		PLATE,SIDE	ﾌﾟﾚｰﾄ	2	[BREZZZ]
7	534A2-74301		DECAL,CAUTION	ﾃﾞｶﾙ	1	[EXA][EXC][WFY135/EXA&C] [WFY146/EXA&C]

FIG.222 MAST[VFHM39A]

(M5020710) マスト

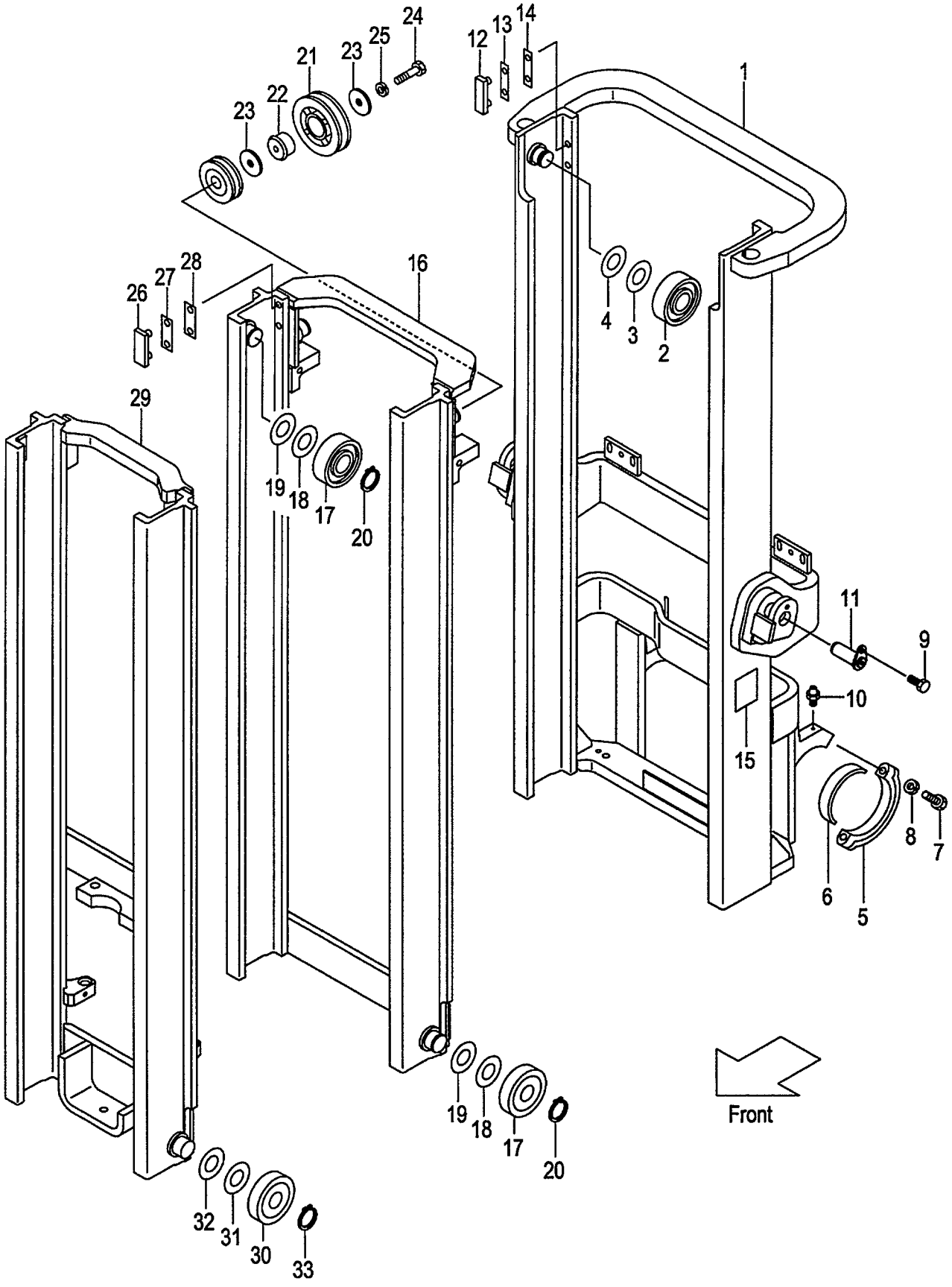

A:VFHM39A(2T)
B:VFHM39A(2.5T)

FIG.222
(M5020710)

Item No	Part No.	Mark	Description	Req'd	Remarks : Serial No.
1	239A0-70211		MAST,OUTER VFHM360 アウタマスト	1	
-	239A0-70221		MAST,OUTER VFHM400 アウタマスト	1	
-	239A0-70201		MAST,OUTER VFHM435 アウタマスト	1	
-	239A0-70231		MAST,OUTER VFHM480 アウタマスト	1	
-	239A0-70241		MAST,OUTER VFHM500 アウタマスト	1	
-	239A0-70251		MAST,OUTER VFHM540 アウタマスト	1	
-	239A0-70261		MAST,OUTER VFHM550 アウタマスト	1	
-	239A0-70271		MAST,OUTER VFHM600 アウタマスト	1	
-	239A0-70281		MAST,OUTER VFHM650 アウタマスト	1	
-	239A0-70291		MAST,OUTER VFHM700 アウタマスト	1	
-	239A0-70301		MAST,OUTER VFHM750 アウタマスト	1	
-	539A3-91411		MAST,OUTER VFHM360 アウタマスト	1	[EXR][RW][HC]
-	539A3-91421		MAST,OUTER VFHM400 アウタマスト	1	[EXR][RW][HC]
-	539A3-91401		MAST,OUTER VFHM435 アウタマスト	1	[EXR][RW][HC]
-	539A3-91431		MAST,OUTER VFHM480 アウタマスト	1	[EXR][RW][HC]
-	539A3-91441		MAST,OUTER VFHM500 アウタマスト	1	[EXR][RW][HC]
-	539A3-91451		MAST,OUTER VFHM540 アウタマスト	1	[EXR][RW][HC]
-	539A3-91461		MAST,OUTER VFHM550 アウタマスト	1	[EXR][RW][HC]
-	539A3-91471		MAST,OUTER VFHM600 アウタマスト	1	[EXR][RW][HC]
-	539A3-91481		MAST,OUTER VFHM650 アウタマスト	1	[EXR][RW][HC]
-	539A3-91491		MAST,OUTER VFHM700 アウタマスト	1	[EXR][RW][HC]
-	539A3-91501		MAST,OUTER VFHM750 アウタマスト	1	[EXR][RW][HC]
2	277P8-22051		ROLLER,END ローラ	2	
-	577P3-74001		ROLLER,END ローラ	2	[FC][CS35][FCS35][FCS45] [FCS55]
3	277P8-22071		SHIM,T-0.5 シム	12	
4	277P8-22081		SHIM,T-1.0 シム	12	
5	22018-30065		CAP,MAST-SUPPORT キャップ	2	
6	214A8-02201		BUSHING ブッシング	2	
7	01103-16065		BOLT ボルト	4	
8	02011-00016		WASHER ワッシャ	4	
9	216G8-52301		BOLT & WASHER ボルト&ワッシャ	2	
10	04901-00100		FITTING フィッティング	2	
11	272K8-52201		PIN ピン	2	
12	216G8-33401		SLIPPER スリッパ	2	
13	216G8-33361		SHIM,T-0.5 シム	8	
14	216G8-33371		SHIM,T-1.0 シム	4	
15	23678-06002		PLATE,NAME プレート	1	
16	232A0-70411		MAST,MIDDLE VFHM360 ミドルマスト	1	
-	232A0-70421		MAST,MIDDLE VFHM400 ミドルマスト	1	
-	232A0-70401		MAST,MIDDLE VFHM435 ミドルマスト	1	
-	232A0-70431		MAST,MIDDLE VFHM480 ミドルマスト	1	
-	232A0-70441		MAST,MIDDLE VFHM500 ミドルマスト	1	
-	232A0-70451		MAST,MIDDLE VFHM540 ミドルマスト	1	
-	232A0-70461		MAST,MIDDLE VFHM550 ミドルマスト	1	
-	232A0-70471		MAST,MIDDLE VFHM600 ミドルマスト	1	
-	232A0-70481		MAST,MIDDLE VFHM650 ミドルマスト	1	
-	232A0-70491		MAST,MIDDLE VFHM700 ミドルマスト	1	
-	232A0-70501		MAST,MIDDLE VFHM750 ミドルマスト	1	
17	277P8-22051		ROLLER,END ローラ	4	

FIG.222 MAST[VFHM39A]

(M5020710) マスト

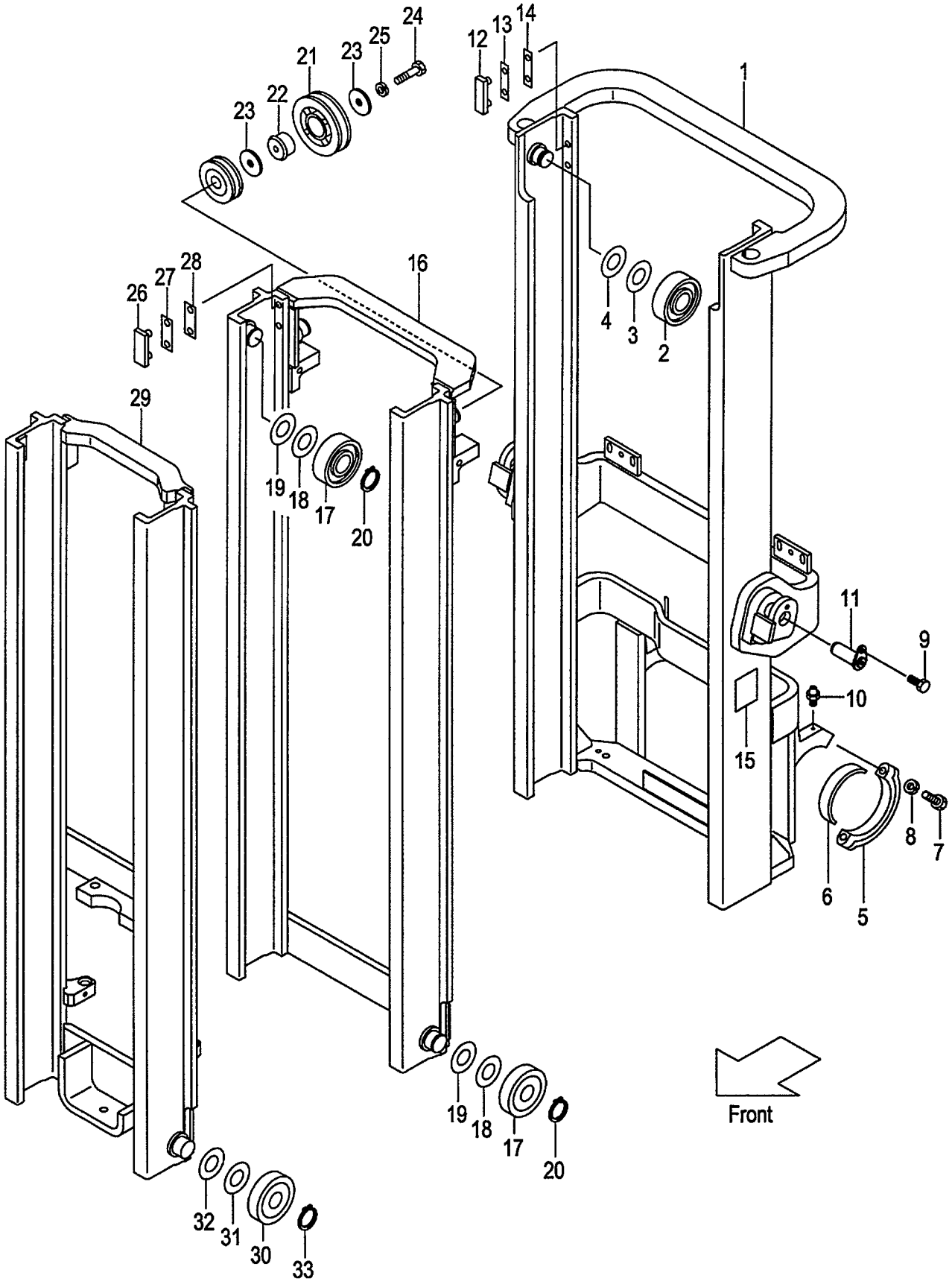

A:VFHM39A(2T)
B:VFHM39A(2.5T)

FIG.222
(M5020710)

Item No	Part No.	Mark	Description		Req'd	Remarks : Serial No.
-	277P8-22061		ROLLER,END	ローラ	(2)	
-	577P3-74001		ROLLER,END	ローラ	4	[FC][CS35][FCS35][FCS45] [FCS55]
-	577P3-74011		ROLLER,END	ローラ	(2)	[FC][CS35][FCS35][FCS45] [FCS55]
18	277P8-22071		SHIM,T-0.5	シム	15	
19	277P8-22081		SHIM,T-1.0	シム	15	
20	09192-30044		RING,SNAP	スナップリング	4	
21	23670-73581		PULLEY	プーリ	1	
22	23200-72211		BRACKET	ブラケット	1	
23	23200-72221		WASHER	ワッシャ	2	
24	01100-16055		BOLT	ボルト	1	
25	02010-00016		WASHER	ワッシャ	1	
26	216G8-33351		SLIPPER	スリッパ	2	
27	216G8-33361		SHIM,T-0.5	シム	4	
28	216G8-33371		SHIM,T-1.0	シム	8	
29	231A0-70612		MAST,INNER VFHM360	インナマスト	1	
-	231A0-70622		MAST,INNER VFHM400	インナマスト	1	
-	231A0-70602		MAST,INNER VFHM435	インナマスト	1	
-	231A0-70632		MAST,INNER VFHM480	インナマスト	1	
-	231A0-70642		MAST,INNER VFHM500	インナマスト	1	
-	231A0-70652		MAST,INNER VFHM540	インナマスト	1	
-	231A0-70662		MAST,INNER VFHM550	インナマスト	1	
-	231A0-70672		MAST,INNER VFHM600	インナマスト	1	
-	231A0-70682		MAST,INNER VFHM650	インナマスト	1	
-	231A0-70692		MAST,INNER VFHM700	インナマスト	1	
-	231A0-70702		MAST,INNER VFHM750	インナマスト	1	
30	277P8-22051		ROLLER,END	ローラ	2	
-	277P8-22061		ROLLER,END	ローラ	(2)	
-	577P3-74001		ROLLER,END	ローラ	2	[FC][CS35][FCS35][FCS45] [FCS55]
-	577P3-74011		ROLLER,END	ローラ	(2)	[FC][CS35][FCS35][FCS45] [FCS55]
31	277P8-22071		SHIM,T-0.5	シム	12	
32	277P8-22081		SHIM,T-1.0	シム	12	
33	09192-30044		RING,SNAP	スナップリング	2	

FIG.223 TILT GAUGE[VFHM39A/(TG,PPC,PR,PRC,MPC)]

(M5020720) ﾃｨﾙﾄｹﾞｰｼﾞ

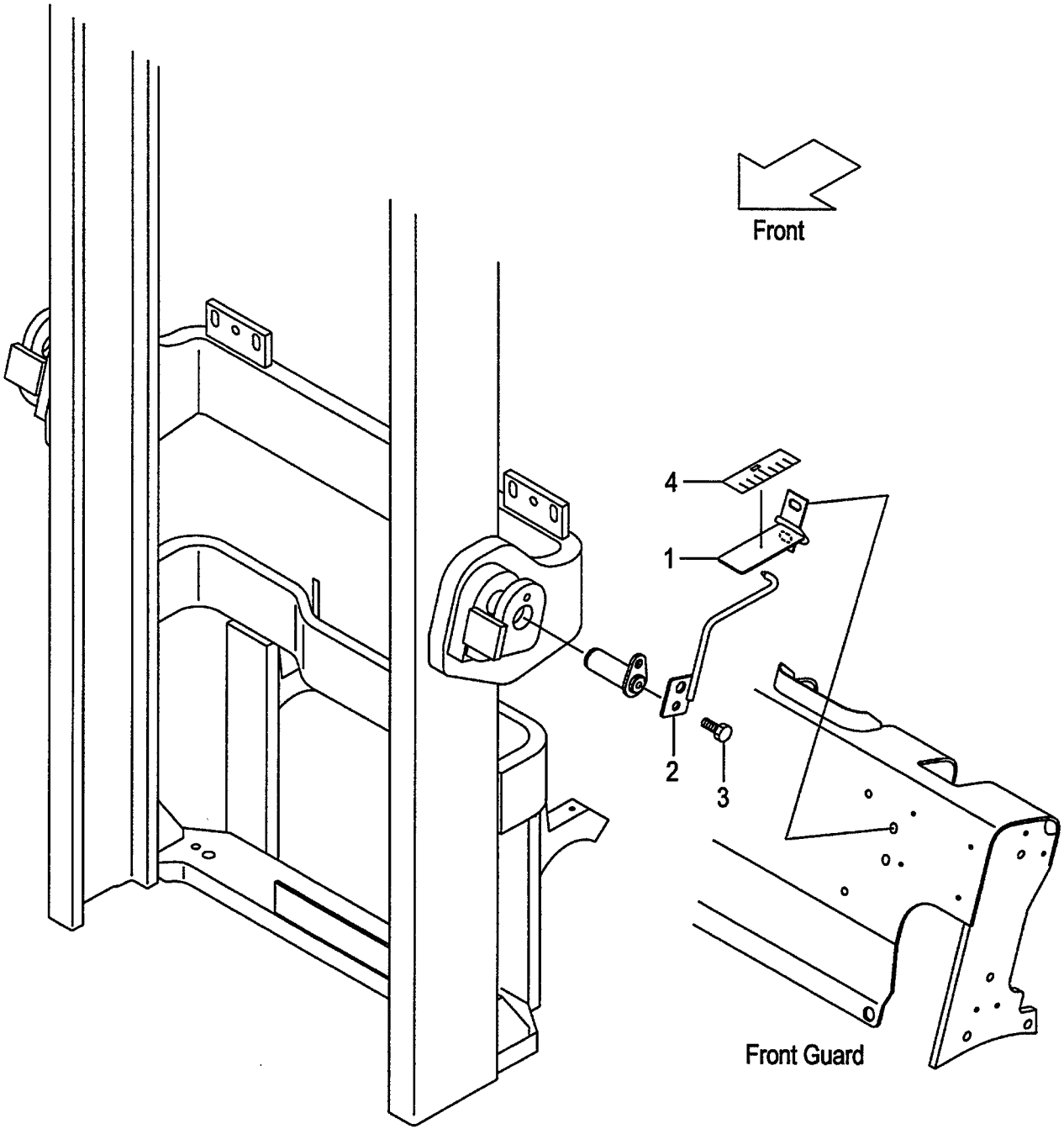

A:VFHM39A(2T)
B:VFHM39A(2.5T)

FIG.223
(M5020720)

Item No	Part No.	Mark	Description		Req'd	Remarks : Serial No.
1	639A0-10011		GAUGE,TILT	ｹﾞｰｼﾞ	1	[TG][PPC][PR][PRC][MPC]
2	639A0-10051		INDICATOR	ｲﾝｼﾞｹｰﾀ	1	[TG][PPC][PR][PRC][MPC]
3	216G4-12251		BOLT	ﾎﾞﾙﾄ	1	[TG][PPC][PR][PRC][MPC]
4	62459-23371		SEAL,GAUGE	ｼｰﾙ	1	[TG][PPC][PR][PRC][MPC]

FIG.224 LIFT CYLINDER(FRONT)[VFHM39A]

(M5020810) リフトシリンダ(フロント)

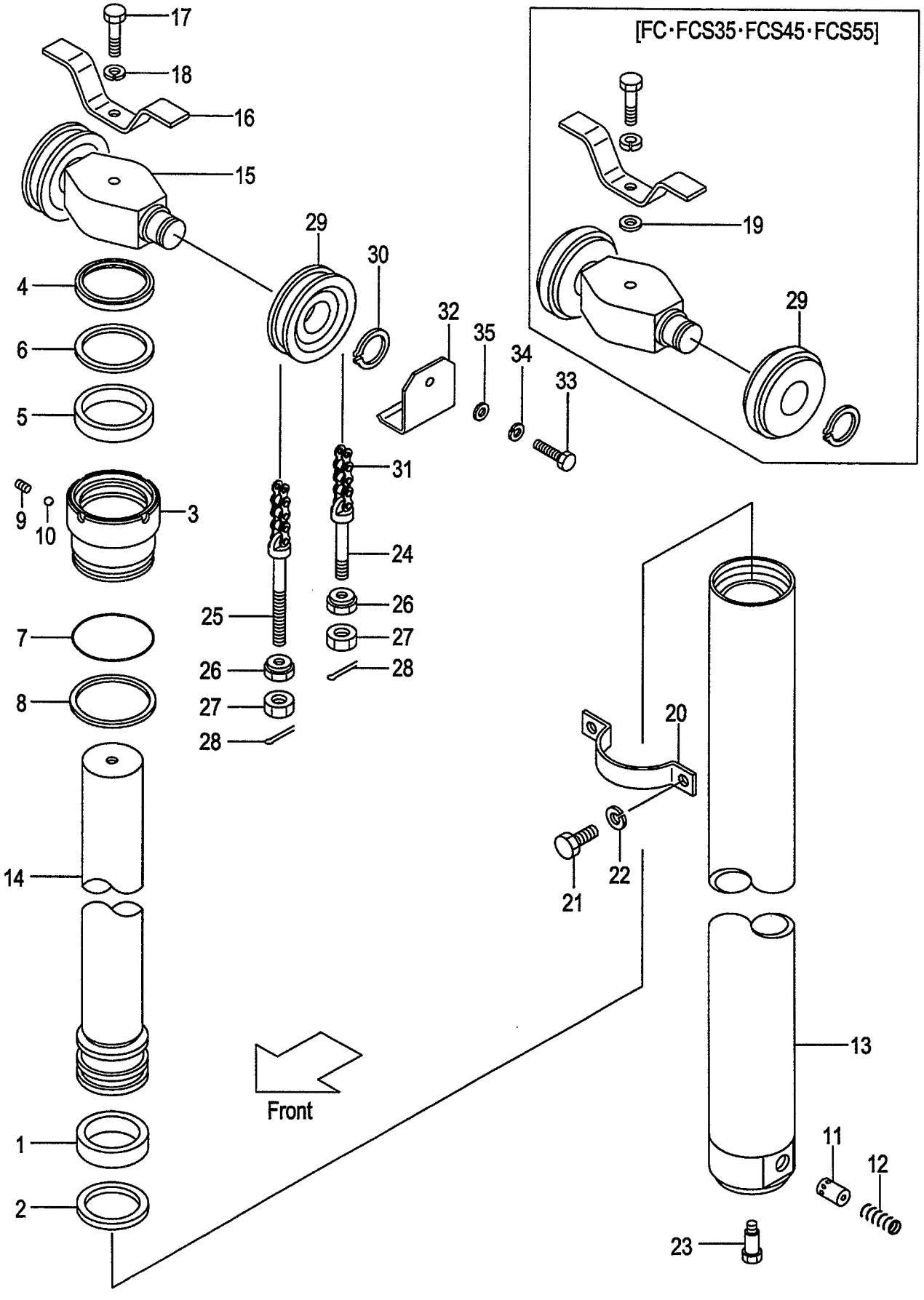

A:VFHM39A(2T)
B:VFHM39A(2.5T)

Item No	Part No.	Mark	Description		Req'd	Remarks : Serial No.
A1	277P0-80011		CYL-ASSY,LIFT VFHM360	ﾘﾌﾄｼﾘﾝﾀﾞｱｯｾﾝ	1	INC.1-14
-	277P0-80021		CYL-ASSY,LIFT VFHM400	ﾘﾌﾄｼﾘﾝﾀﾞｱｯｾﾝ	1	INC.1-14
-	277P0-80001		CYL-ASSY,LIFT VFHM435	ﾘﾌﾄｼﾘﾝﾀﾞｱｯｾﾝ	1	INC.1-14
-	277P0-80031		CYL-ASSY,LIFT VFHM480	ﾘﾌﾄｼﾘﾝﾀﾞｱｯｾﾝ	1	INC.1-14
-	277P0-80041		CYL-ASSY,LIFT VFHM500	ﾘﾌﾄｼﾘﾝﾀﾞｱｯｾﾝ	1	INC.1-14
-	277P0-80051		CYL-ASSY,LIFT VFHM540	ﾘﾌﾄｼﾘﾝﾀﾞｱｯｾﾝ	1	INC.1-14
-	277P0-80061		CYL-ASSY,LIFT VFHM550	ﾘﾌﾄｼﾘﾝﾀﾞｱｯｾﾝ	1	INC.1-14
-	277P0-80071		CYL-ASSY,LIFT VFHM600	ﾘﾌﾄｼﾘﾝﾀﾞｱｯｾﾝ	1	INC.1-14
-	277P0-80081		CYL-ASSY,LIFT VFHM650	ﾘﾌﾄｼﾘﾝﾀﾞｱｯｾﾝ	1	INC.1-14
-	277P0-80091		CYL-ASSY,LIFT VFHM700	ﾘﾌﾄｼﾘﾝﾀﾞｱｯｾﾝ	1	INC.1-14
-	277P0-80101		CYL-ASSY,LIFT VFHM750	ﾘﾌﾄｼﾘﾝﾀﾞｱｯｾﾝ	1	INC.1-14
1	22438-42641	*	WEARING	ｳｴｱﾘﾝｸﾞ	1	
2	53658-42011	*	RING,PISTON	ﾘﾝｸﾞ	1	
3	277P0-82061		CAP,CYL	ｷｬｯﾌﾟ	1	
4	27410-53201	*	SEAL,DUST	ｼｰﾙ	1	
5	23670-82251	*	PACKING	ﾊﾟｯｷﾝｸﾞ	1	
6	23670-82261	*	RING,BACK-UP	ﾘﾝｸﾞ	1	
7	03350-00850	*	O-RING	Oﾘﾝｸﾞ	1	
8	277P0-82071	*	RING,BACK-UP	ﾘﾝｸﾞ	1	
9	234A0-52611		PLUG	ﾌﾟﾗｸﾞ	1	
10	03190-00006		BALL	ﾎﾞｰﾙ	1	
11	229F0-82101		PISTON	ﾋﾟｽﾄﾝ	1	
12	24389-46021		SPRING	ｽﾌﾟﾘﾝｸﾞ	1	
13	277P0-80511		TUBE,CYL VFHM360	ﾁｭｰﾌﾞ	1	
-	277P0-80521		TUBE,CYL VFHM400	ﾁｭｰﾌﾞ	1	
-	277P0-80501		TUBE,CYL VFHM435	ﾁｭｰﾌﾞ	1	
-	277P0-80531		TUBE,CYL VFHM480	ﾁｭｰﾌﾞ	1	
-	277P0-80541		TUBE,CYL VFHM500	ﾁｭｰﾌﾞ	1	
-	277P0-80551		TUBE,CYL VFHM540	ﾁｭｰﾌﾞ	1	
-	277P0-80561		TUBE,CYL VFHM550	ﾁｭｰﾌﾞ	1	
-	277P0-80571		TUBE,CYL VFHM600	ﾁｭｰﾌﾞ	1	
-	277P0-80581		TUBE,CYL VFHM650	ﾁｭｰﾌﾞ	1	
-	277P0-80591		TUBE,CYL VFHM700	ﾁｭｰﾌﾞ	1	
-	277P0-80601		TUBE,CYL VFHM750	ﾁｭｰﾌﾞ	1	
14	277P0-80311		ROD,PISTON VFHM360	ﾛｯﾄﾞ	1	
-	277P0-80321		ROD,PISTON VFHM400	ﾛｯﾄﾞ	1	
-	277P0-80301		ROD,PISTON VFHM435	ﾛｯﾄﾞ	1	
-	277P0-80331		ROD,PISTON VFHM480	ﾛｯﾄﾞ	1	
-	277P0-80341		ROD,PISTON VFHM500	ﾛｯﾄﾞ	1	
-	277P0-80351		ROD,PISTON VFHM540	ﾛｯﾄﾞ	1	
-	277P0-50601		ROD,PISTON VFHM550	ﾛｯﾄﾞ	1	
-	277P0-80371		ROD,PISTON VFHM600	ﾛｯﾄﾞ	1	
-	277P0-80381		ROD,PISTON VFHM650	ﾛｯﾄﾞ	1	
-	277P0-80391		ROD,PISTON VFHM700	ﾛｯﾄﾞ	1	
-	277P0-80401		ROD,PISTON VFHM750	ﾛｯﾄﾞ	1	
15	277P0-82501		HEAD,PISTON	ﾍｯﾄﾞ	1	
16	214A0-82681		STOPPER,CHAIN	ｽﾄｯﾊﾟ	1	
17	01100-16075		BOLT	ﾎﾞﾙﾄ	1	
18	02010-00016		WASHER	ﾜｯｼｬ	1	
19	02000-00016		WASHER	ﾜｯｼｬ	1	[FC][FCS35][FCS45][FCS55]

FIG.224 LIFT CYLINDER(FRONT)[VFHM39A]

(M5020810) リフトシリンダ(フロント)

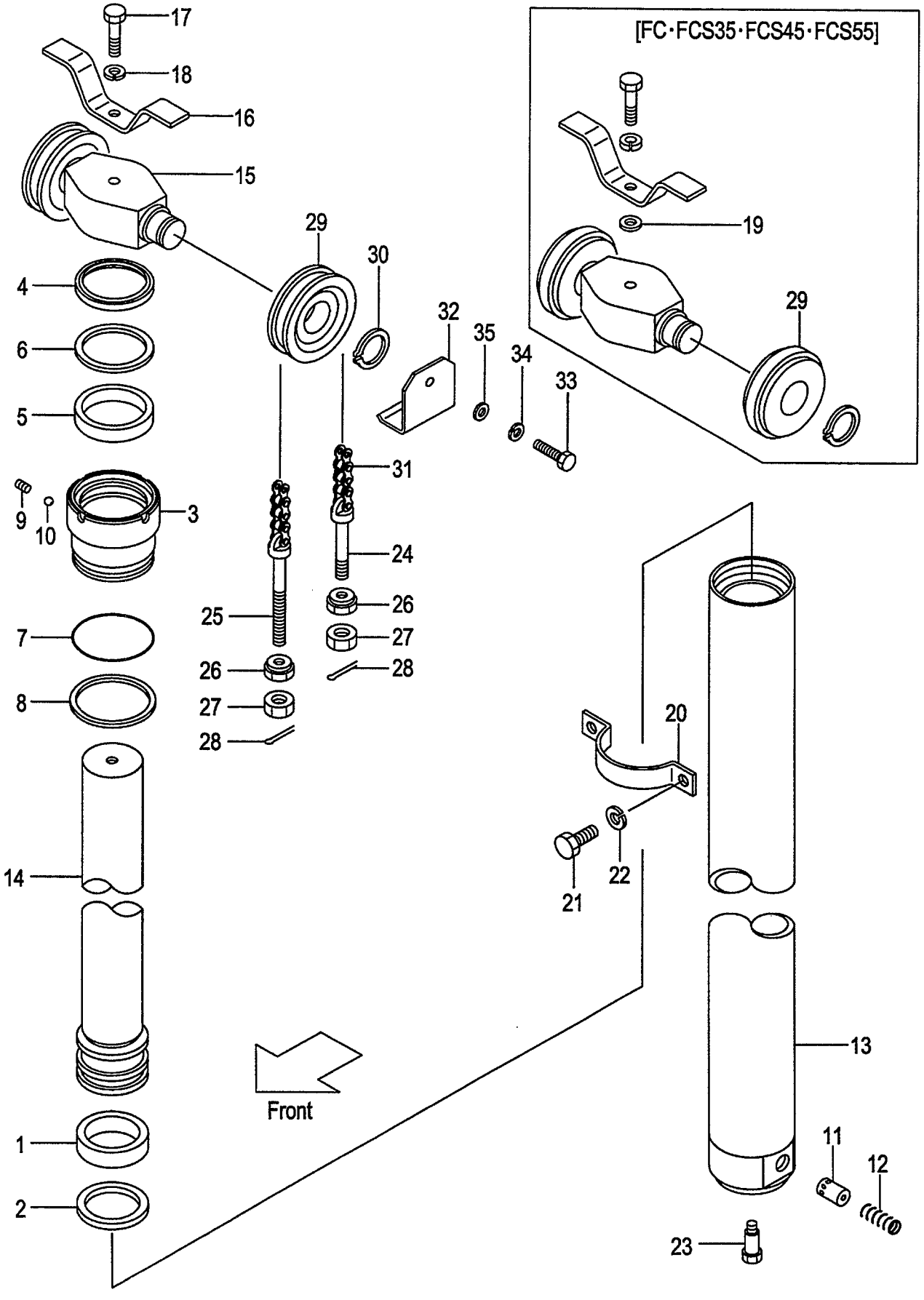

A:VFHM39A(2T)
B:VFHM39A(2.5T)

FIG.224
(M5020810)

Item No	Part No.	Mark	Description		Req'd	Remarks : Serial No.
20	214A0-82651		SUPPORT,CYL	ｻﾎﾟｰﾄ	1	
21	01103-10020		BOLT	ﾎﾞﾙﾄ	2	
22	02011-00010		WASHER	ﾜｯｼｬ	2	
23	214A0-82831		BOLT	ﾎﾞﾙﾄ	1	
24	52672-72231		PIN,ANCHOR	ﾋﾟﾝ	2	
-	231A0-82001		PIN,ANCHOR	ﾋﾟﾝ	2	[FC][FCS35][FCS45][FCS55]
25	23500-82001		PIN,ANCHOR	ﾋﾟﾝ	2	
-	22218-42111		PIN,ANCHOR	ﾋﾟﾝ	2	[FC][FCS35][FCS45][FCS55]
26	22218-40191		NUT	ﾅｯﾄ	4	
27	01400-00018		NUT	ﾅｯﾄ	4	
28	02200-03030		PIN	ﾋﾟﾝ	4	
29	234A8-43501		SHEAVE	ｼｰﾌﾞ	2	
-	22208-40031		SHEAVE	ｼｰﾌﾞ	2	[FC][FCS35][FCS45][FCS55]
30	02100-00040		RING,SNAP	ｽﾅｯﾌﾟﾘﾝｸﾞ	2	
31	22679-45651		CHAIN,LEAF VFHM360	ﾁｪｰﾝ	2	
-	22679-45711		CHAIN,LEAF VFHM400	ﾁｪｰﾝ	2	
-	22679-45791		CHAIN,LEAF VFHM435	ﾁｪｰﾝ	2	
-	22679-45871		CHAIN,LEAF VFHM480	ﾁｪｰﾝ	2	
-	22679-45911		CHAIN,LEAF VFHM500	ﾁｪｰﾝ	2	
-	22679-45991		CHAIN,LEAF VFHM540	ﾁｪｰﾝ	2	
-	22679-45991		CHAIN,LEAF VFHM550	ﾁｪｰﾝ	2	
-	22679-46091		CHAIN,LEAF VFHM600	ﾁｪｰﾝ	2	
-	22679-46211		CHAIN,LEAF VFHM650	ﾁｪｰﾝ	2	
-	22679-46331		CHAIN,LEAF VFHM700	ﾁｪｰﾝ	2	
-	22679-46411		CHAIN,LEAF VFHM750	ﾁｪｰﾝ	2	
-	09001-10037		CHAIN,ROLLER VFHM360	ﾁｪｰﾝ	2	[FC][FCS35][FCS45][FCS55]
-	09001-10041		CHAIN,ROLLER VFHM400	ﾁｪｰﾝ	2	[FC][FCS35][FCS45][FCS55]
-	09001-10045		CHAIN,ROLLER VFHM435	ﾁｪｰﾝ	2	[FC][FCS35][FCS45][FCS55]
-	09001-10051		CHAIN,ROLLER VFHM480	ﾁｪｰﾝ	2	[FC][FCS35][FCS45][FCS55]
-	09001-10053		CHAIN,ROLLER VFHM500	ﾁｪｰﾝ	2	[FC][FCS35][FCS45][FCS55]
-	09001-10057		CHAIN,ROLLER VFHM540	ﾁｪｰﾝ	2	[FC][FCS35][FCS45][FCS55]
-	09001-10059		CHAIN,ROLLER VFHM550	ﾁｪｰﾝ	2	[FC][FCS35][FCS45][FCS55]
-	09001-10065		CHAIN,ROLLER VFHM600	ﾁｪｰﾝ	2	[FC][FCS35][FCS45][FCS55]
-	09001-10071		CHAIN,ROLLER VFHM650	ﾁｪｰﾝ	2	[FC][FCS35][FCS45][FCS55]
-	09001-10079		CHAIN,ROLLER VFHM700	ﾁｪｰﾝ	2	[FC][FCS35][FCS45][FCS55]
-	09001-10083		CHAIN,ROLLER VFHM750	ﾁｪｰﾝ	2	[FC][FCS35][FCS45][FCS55]
32	534A3-04001		COVER,CHAIN	ｶﾊﾞｰ	2	[EXE][EXN]
33	01100-16016		BOLT	ﾎﾞﾙﾄ	2	[EXE][EXN]
34	02010-00016		WASHER	ﾜｯｼｬ	2	[EXE][EXN]
35	02000-00016		WASHER	ﾜｯｼｬ	2	[EXE][EXN]
K1	277P0-59801		KIT,OVERHAUL	ｵｰﾊﾞﾎｰﾙｷｯﾄ	1	INC.1,2,4-8

FIG.225 LIFT CYLINDER(REAR)[VFHM39A]

(M5020820) リフトシリンダ(リヤー)

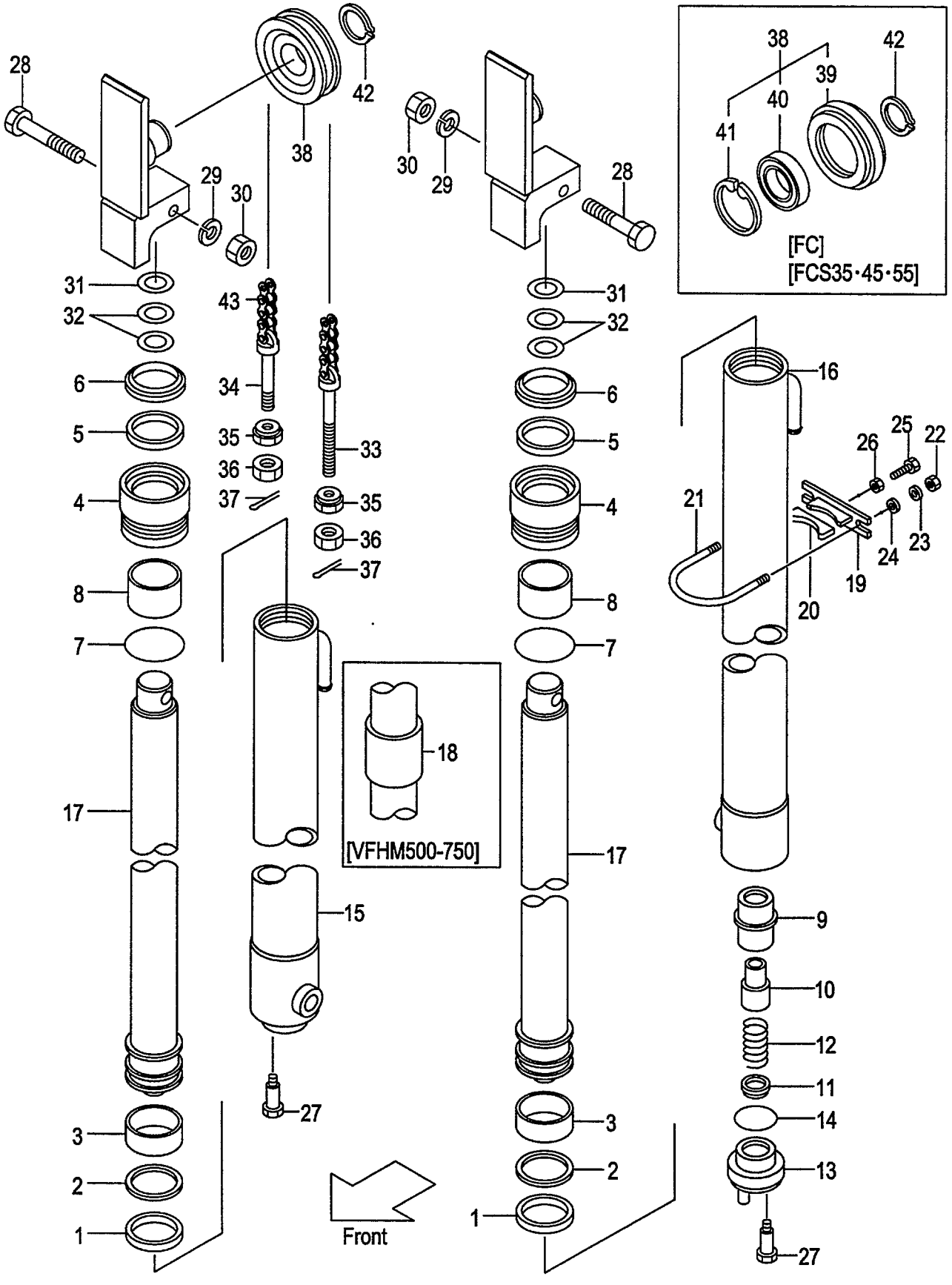

A:VFHM39A(2T)
B:VFHM39A(2.5T)

FIG.225
(M5020820)

Item No	Part No.	Mark	Description	Req'd	Remarks : Serial No.
A1	277P0-81712		CYL-ASSY,LIFT,RH VFHM360 リフトシリンダアッセン	1	INC.1-8,15,17
-	277P0-81722		CYL-ASSY,LIFT,RH VFHM400 リフトシリンダアッセン	1	INC.1-8,15,17
-	277P0-81702		CYL-ASSY,LIFT,RH VFHM435 リフトシリンダアッセン	1	INC.1-8,15,17
-	277P0-81732		CYL-ASSY,LIFT,RH VFHM480 リフトシリンダアッセン	1	INC.1-8,15,17
-	277P0-81742		CYL-ASSY,LIFT,RH VFHM500 リフトシリンダアッセン	1	INC.1-8,15,17,18
-	277P0-81752		CYL-ASSY,LIFT,RH VFHM540 リフトシリンダアッセン	1	INC.1-8,15,17,18
-	277P0-81762		CYL-ASSY,LIFT,RH VFHM550 リフトシリンダアッセン	1	INC.1-8,15,17,18
-	277P0-81772		CYL-ASSY,LIFT,RH VFHM600 リフトシリンダアッセン	1	INC.1-8,15,17,18
-	277P0-81782		CYL-ASSY,LIFT,RH VFHM650 リフトシリンダアッセン	1	INC.1-8,15,17,18
-	277P0-81792		CYL-ASSY,LIFT,RH VFHM700 リフトシリンダアッセン	1	INC.1-8,15,17,18
-	277P0-81802		CYL-ASSY,LIFT,RH VFHM750 リフトシリンダアッセン	1	INC.1-8,15,17,18
A2	277P0-81912		CYL-ASSY,LIFT,LH VFHM360 リフトシリンダアッセン	1	INC.1-14,16,17
-	277P0-81922		CYL-ASSY,LIFT,LH VFHM400 リフトシリンダアッセン	1	INC.1-14,16,17
-	277P0-81902		CYL-ASSY,LIFT,LH VFHM435 リフトシリンダアッセン	1	INC.1-14,16,17
-	277P0-81932		CYL-ASSY,LIFT,LH VFHM480 リフトシリンダアッセン	1	INC.1-14,16,17
-	277P0-81942		CYL-ASSY,LIFT,LH VFHM500 リフトシリンダアッセン	1	INC.1-14,16,17,18
-	277P0-81952		CYL-ASSY,LIFT,LH VFHM540 リフトシリンダアッセン	1	INC.1-14,16,17,18
-	277P0-81962		CYL-ASSY,LIFT,LH VFHM550 リフトシリンダアッセン	1	INC.1-14,16,17,18
-	277P0-81972		CYL-ASSY,LIFT,LH VFHM600 リフトシリンダアッセン	1	INC.1-14,16,17,18
-	277P0-81982		CYL-ASSY,LIFT,LH VFHM650 リフトシリンダアッセン	1	INC.1-14,16,17,18
-	277P0-81992		CYL-ASSY,LIFT,LH VFHM700 リフトシリンダアッセン	1	INC.1-14,16,17,18
-	277P0-82002		CYL-ASSY,LIFT,LH VFHM750 リフトシリンダアッセン	1	INC.1-14,16,17,18
1	23650-83521	*	PACKING パッキング	2	
2	23650-83531	*	RING,BACK-UP リング	2	
3	27970-53141	*	WEARING ウエアリング	2	
4	232A8-42601		CAP,CYL キャップ	2	
5	214A8-42721	*	PACKING パッキング	2	
6	214A8-46001	*	SEAL,DUST シール	2	

FIG.225 LIFT CYLINDER(REAR)[VFHM39A]

(M5020820) リフトシリンダ(リヤー)

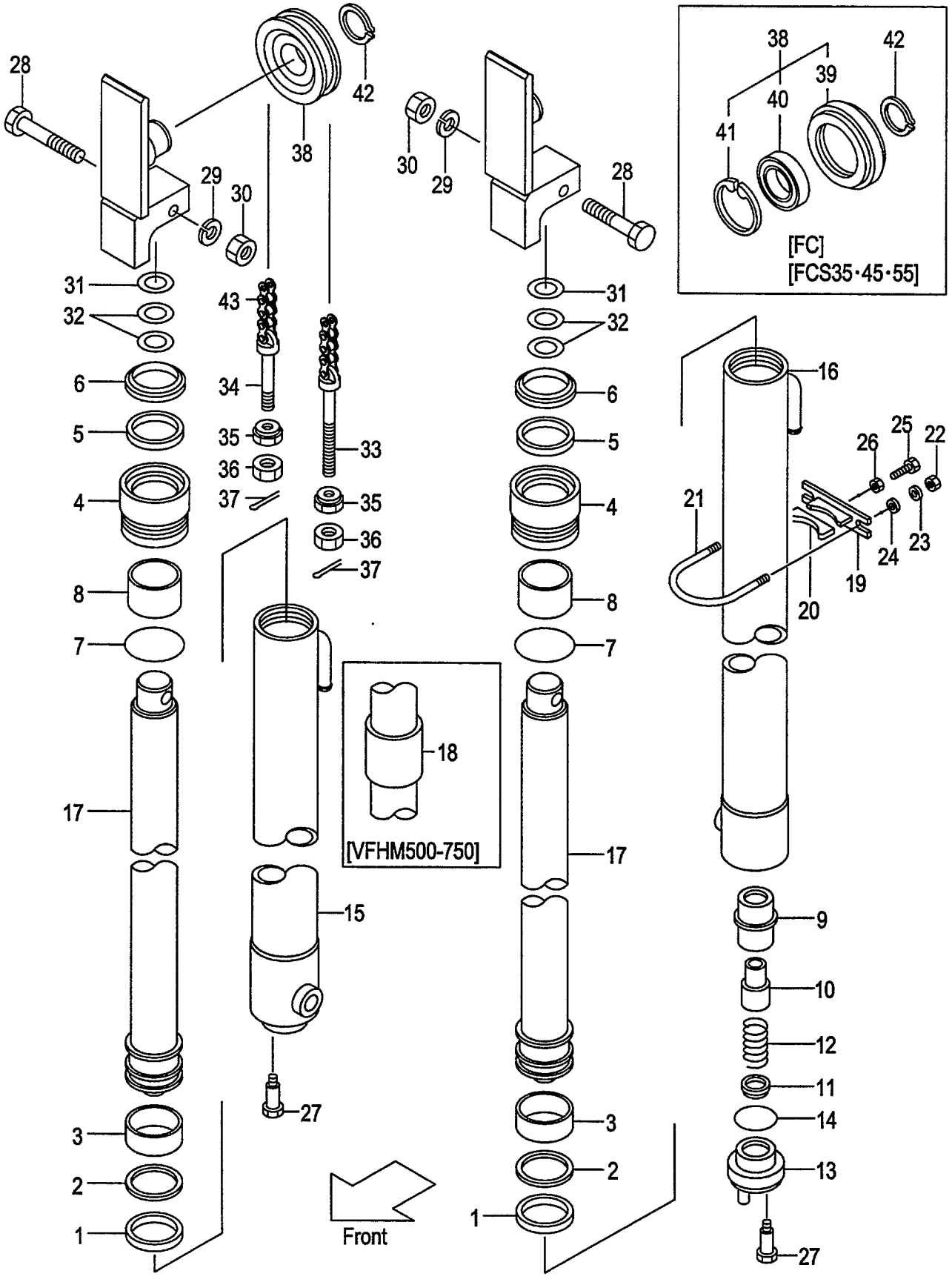

A:VFHM39A(2T)
B:VFHM39A(2.5T)

FIG.225
(M5020820)

Item No	Part No.	Mark	Description		Req'd	Remarks : Serial No.
7	232A8-42631	*	O-RING	Oﾘﾝｸﾞ	2	
8	232A8-42621		BUSHING	ﾌﾞｯｼﾝｸﾞ	2	
9	53658-43021		SLEEVE	ｽﾘｰﾌﾞ	1	(LH)
10	53658-43011		PISTON	ﾋﾟｽﾄﾝ	1	(LH)
11	53658-43001		VALVE,CHECK	ﾊﾞﾙﾌﾞ	1	(LH)
12	53658-43031		SPRING	ｽﾌﾟﾘﾝｸﾞ	1	(LH)
13	53658-43041		PLUG	ﾌﾟﾗｸﾞ	1	(LH)
14	03320-00340		O-RING	Oﾘﾝｸﾞ	1	(LH)
15	277P0-81312		TUBE,CYL,RH VFHM360	ﾁｭｰﾌﾞ	1	
-	277P0-81322		TUBE,CYL,RH VFHM400	ﾁｭｰﾌﾞ	1	
-	277P0-81302		TUBE,CYL,RH VFHM435	ﾁｭｰﾌﾞ	1	
-	277P0-81332		TUBE,CYL,RH VFHM480	ﾁｭｰﾌﾞ	1	
-	277P0-81342		TUBE,CYL,RH VFHM500	ﾁｭｰﾌﾞ	1	
-	277P0-81352		TUBE,CYL,RH VFHM540	ﾁｭｰﾌﾞ	1	
-	277P0-81362		TUBE,CYL,RH VFHM550	ﾁｭｰﾌﾞ	1	
-	277P0-81372		TUBE,CYL,RH VFHM600	ﾁｭｰﾌﾞ	1	
-	277P0-81382		TUBE,CYL,RH VFHM650	ﾁｭｰﾌﾞ	1	
-	277P0-81392		TUBE,CYL,RH VFHM700	ﾁｭｰﾌﾞ	1	
-	277P0-81402		TUBE,CYL,RH VFHM750	ﾁｭｰﾌﾞ	1	
16	277P0-81512		TUBE,CYL,LH VFHM360	ﾁｭｰﾌﾞ	1	
-	277P0-81522		TUBE,CYL,LH VFHM400	ﾁｭｰﾌﾞ	1	
-	277P0-81502		TUBE,CYL,LH VFHM435	ﾁｭｰﾌﾞ	1	
-	277P0-81532		TUBE,CYL,LH VFHM480	ﾁｭｰﾌﾞ	1	
-	277P0-81542		TUBE,CYL,LH VFHM500	ﾁｭｰﾌﾞ	1	
-	277P0-81552		TUBE,CYL,LH VFHM540	ﾁｭｰﾌﾞ	1	
-	277P0-81562		TUBE,CYL,LH VFHM550	ﾁｭｰﾌﾞ	1	
-	277P0-81572		TUBE,CYL,LH VFHM600	ﾁｭｰﾌﾞ	1	
-	277P0-81582		TUBE,CYL,LH VFHM650	ﾁｭｰﾌﾞ	1	
-	277P0-81592		TUBE,CYL,LH VFHM700	ﾁｭｰﾌﾞ	1	
-	277P0-81602		TUBE,CYL,LH VFHM750	ﾁｭｰﾌﾞ	1	
17	277P0-81111		ROD,PISTON VFHM360	ﾛｯﾄﾞ	2	
-	277P0-81121		ROD,PISTON VFHM400	ﾛｯﾄﾞ	2	
-	277P0-81101		ROD,PISTON VFHM435	ﾛｯﾄﾞ	2	
-	277P0-81131		ROD,PISTON VFHM480	ﾛｯﾄﾞ	2	
-	277P0-81141		ROD,PISTON VFHM500	ﾛｯﾄﾞ	2	
-	277P0-81151		ROD,PISTON VFHM540	ﾛｯﾄﾞ	2	
-	277P0-81161		ROD,PISTON VFHM550	ﾛｯﾄﾞ	2	
-	277P0-81171		ROD,PISTON VFHM600	ﾛｯﾄﾞ	2	
-	277P0-81181		ROD,PISTON VFHM650	ﾛｯﾄﾞ	2	
-	277P0-81191		ROD,PISTON VFHM700	ﾛｯﾄﾞ	2	
-	277P0-81201		ROD,PISTON VFHM750	ﾛｯﾄﾞ	2	
18	23650-83561		SPACER VFHM500	ｽﾍﾟｰｻ	2	
-	23650-83551		SPACER VFHM540	ｽﾍﾟｰｻ	2	
-	23650-83561		SPACER VFHM550	ｽﾍﾟｰｻ	2	
-	23650-83571		SPACER VFHM600	ｽﾍﾟｰｻ	2	
-	29690-83011		SPACER VFHM650	ｽﾍﾟｰｻ	2	
-	29690-83021		SPACER VFHM700	ｽﾍﾟｰｻ	2	
-	29690-83021		SPACER VFHM750	ｽﾍﾟｰｻ	2	
A3	215E8-42171		SUPPORT-ASSY,CYL	ｼﾘﾝﾀﾞｻﾎﾟｰﾄｱｯｾﾝ	2	(VFHM360-550) INC.19,20
-	215E8-42171		SUPPORT-ASSY,CYL	ｼﾘﾝﾀﾞｻﾎﾟｰﾄｱｯｾﾝ	4	(VFHM600-750) INC.19,20

FIG.225 LIFT CYLINDER(REAR)[VFHM39A]

(M5020820) リフトシリンダ(リヤー)

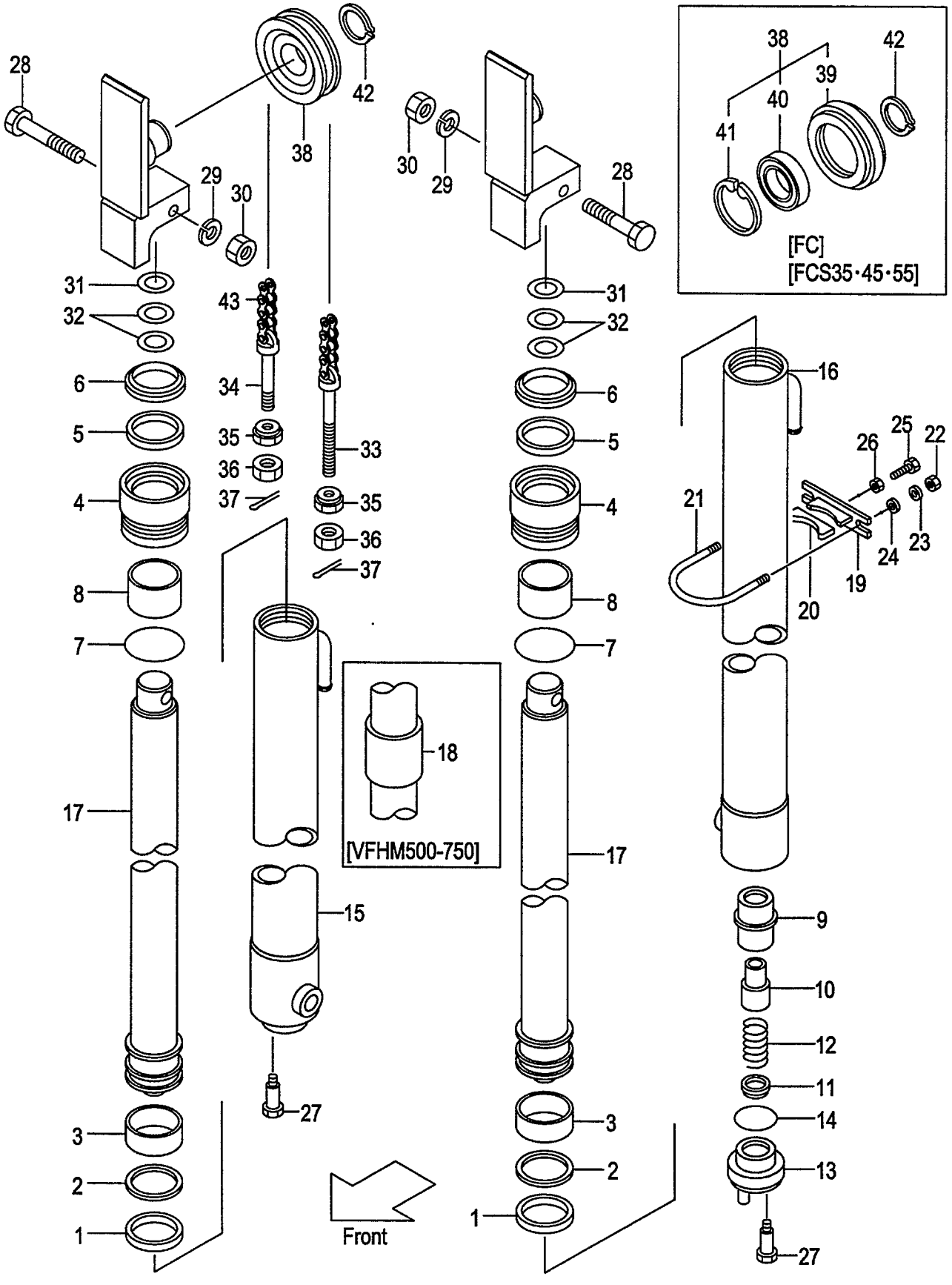

A:VFHM39A(2T)
B:VFHM39A(2.5T)

FIG.225
(M5020820)

Item No	Part No.	Mark	Description		Req'd	Remarks : Serial No.
19	215E8-42181		SUPPORT,CYL	ｻﾎﾟｰﾄ	2	(VFHM360-550)
-	215E8-42181		SUPPORT,CYL	ｻﾎﾟｰﾄ	4	(VFHM600-750)
20	24868-42111		RUBBER	ﾗﾊﾞｰ	2	(VFHM360-550)
-	24868-42111		RUBBER	ﾗﾊﾞｰ	4	(VFHM600-750)
21	234A8-42551		U-BOLT	Uﾎﾞﾙﾄ	2	(VFHM360-550)
-	234A8-42551		U-BOLT	Uﾎﾞﾙﾄ	4	(VFHM600-750)
22	234A8-42561		NUT	ﾅｯﾄ	4	(VFHM360-550)
-	234A8-42561		NUT	ﾅｯﾄ	8	(VFHM600-750)
23	02010-20010		WASHER	ﾜｯｼｬ	4	(VFHM360-550)
-	02010-20010		WASHER	ﾜｯｼｬ	8	(VFHM600-750)
24	02000-20010		WASHER	ﾜｯｼｬ	4	(VFHM360-550)
-	02000-20010		WASHER	ﾜｯｼｬ	8	(VFHM600-750)
25	232A8-42201		BOLT	ﾎﾞﾙﾄ	2	(VFHM360-550)
-	232A8-42201		BOLT	ﾎﾞﾙﾄ	4	(VFHM600-750)
26	234A8-42571		NUT	ﾅｯﾄ	2	(VFHM360-550)
-	234A8-42571		NUT	ﾅｯﾄ	4	(VFHM600-750)
27	214A8-42661		BOLT	ﾎﾞﾙﾄ	2	
28	01100-12070		BOLT	ﾎﾞﾙﾄ	2	
29	02010-00012		WASHER	ﾜｯｼｬ	2	
30	01400-00012		NUT	ﾅｯﾄ	2	
31	23917-42191		SHIM,T-1.0	ｼﾑ	10	
32	22679-43831		SHIM,T-0.5	ｼﾑ	10	
33	52672-72231		PIN,ANCHOR	ﾋﾟﾝ	2	
-	22218-42111		PIN,ANCHOR	ﾋﾟﾝ	2	[FC][FCS35][FCS45][FCS55]
34	23500-82001		PIN,ANCHOR	ﾋﾟﾝ	2	
-	23658-42531		PIN,ANCHOR	ﾋﾟﾝ	2	[FC][FCS35][FCS45][FCS55]
35	22218-40191		NUT	ﾅｯﾄ	4	
36	01400-00018		NUT	ﾅｯﾄ	4	
37	02200-03030		PIN	ﾋﾟﾝ	4	
38	277P0-83001		SHEAVE	ｼｰﾌﾞ	2	
-	577P3-74021		SHEAVE	ｼｰﾌﾞ	2	[FC][FCS35][FCS45][FCS55] INC.39-41
39	577P3-74031		BODY,SHEAVE	ﾎﾞﾃﾞｨ	2	[FC][FCS35][FCS45][FCS55]
40	03042-06308		BEARING	ﾍﾞｱﾘﾝｸﾞ	2	[FC][FCS35][FCS45][FCS55]
41	02110-00090		RING,SNAP	ｽﾅｯﾌﾟﾘﾝｸﾞ	2	[FC][FCS35][FCS45][FCS55]
42	02100-00040		RING,SNAP	ｽﾅｯﾌﾟﾘﾝｸﾞ	2	
43	22679-45831		CHAIN,LEAF VFHM360	ﾁｪｰﾝ	2	
-	22679-45891		CHAIN,LEAF VFHM400	ﾁｪｰﾝ	2	
-	22679-45971		CHAIN,LEAF VFHM435	ﾁｪｰﾝ	2	
-	22679-46031		CHAIN,LEAF VFHM480	ﾁｪｰﾝ	2	
-	22679-46091		CHAIN,LEAF VFHM500	ﾁｪｰﾝ	2	
-	22679-46151		CHAIN,LEAF VFHM540	ﾁｪｰﾝ	2	
-	22679-46171		CHAIN,LEAF VFHM550	ﾁｪｰﾝ	2	
-	22679-46271		CHAIN,LEAF VFHM600	ﾁｪｰﾝ	2	
-	22679-46391		CHAIN,LEAF VFHM650	ﾁｪｰﾝ	2	
-	22679-46511		CHAIN,LEAF VFHM700	ﾁｪｰﾝ	2	
-	22679-46591		CHAIN,LEAF VFHM750	ﾁｪｰﾝ	2	
-	09001-10049		CHAIN,ROLLER VFHM360	ﾁｪｰﾝ	2	[FC][FCS35][FCS45][FCS55]
-	09001-10053		CHAIN,ROLLER VFHM400	ﾁｪｰﾝ	2	[FC][FCS35][FCS45][FCS55]
-	09001-10057		CHAIN,ROLLER VFHM435	ﾁｪｰﾝ	2	[FC][FCS35][FCS45][FCS55]

FIG.225 LIFT CYLINDER(REAR)[VFHM39A]

(M5020820) リフトシリンダ(リヤー)

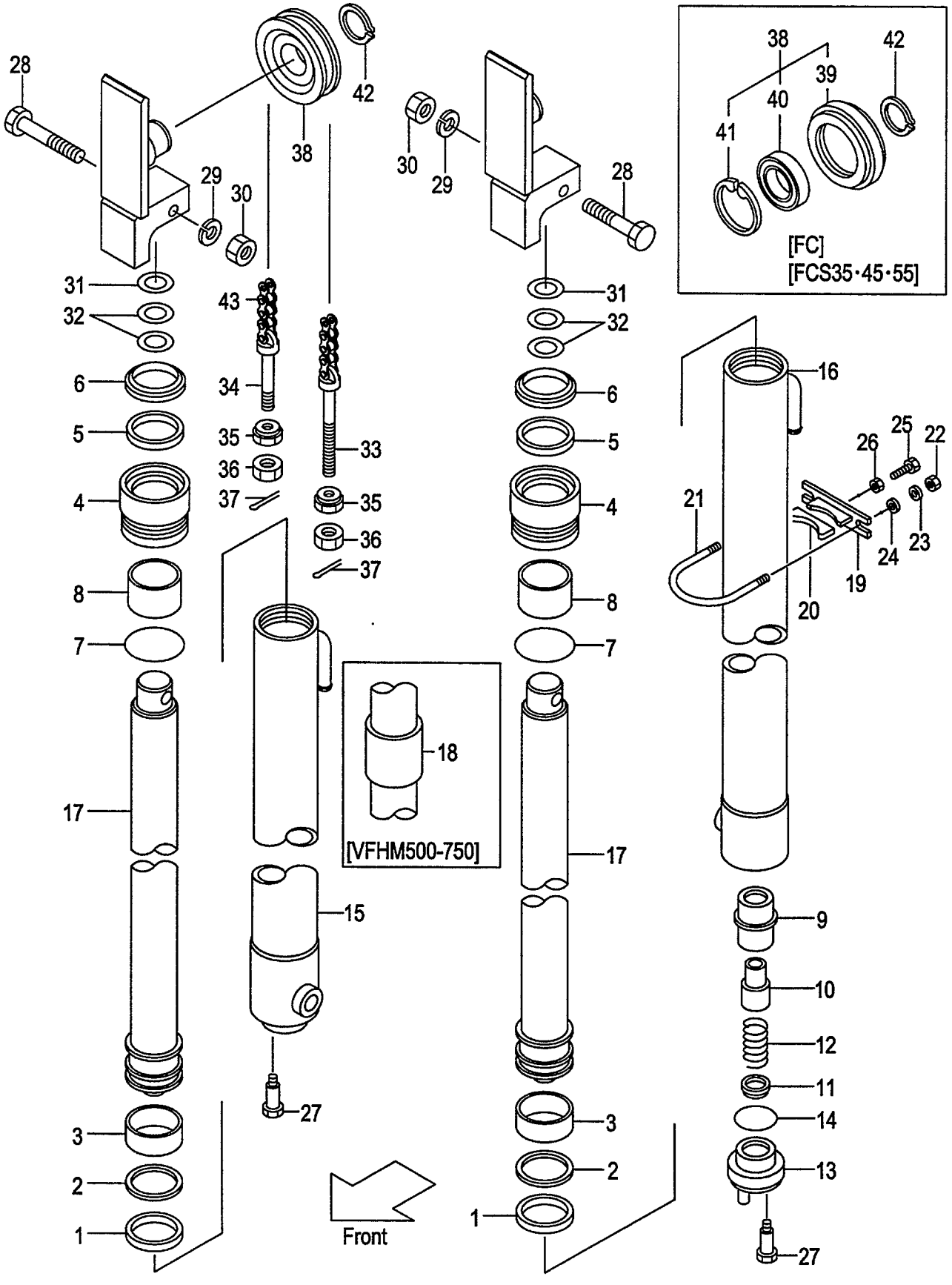

A:VFHM39A(2T)
B:VFHM39A(2.5T)

FIG.225
(M5020820)

Item No	Part No.	Mark	Description	Req'd	Remarks : Serial No.
-	09001-10063		CHAIN,ROLLER VFHM480 ﾁｪｰﾝ	2	[FC][FCS35][FCS45][FCS55]
-	09001-10065		CHAIN,ROLLER VFHM500 ﾁｪｰﾝ	2	[FC][FCS35][FCS45][FCS55]
-	09001-10069		CHAIN,ROLLER VFHM540 ﾁｪｰﾝ	2	[FC][FCS35][FCS45][FCS55]
-	09001-10071		CHAIN,ROLLER VFHM550 ﾁｪｰﾝ	2	[FC][FCS35][FCS45][FCS55]
-	09001-10077		CHAIN,ROLLER VFHM600 ﾁｪｰﾝ	2	[FC][FCS35][FCS45][FCS55]
-	09001-10083		CHAIN,ROLLER VFHM650 ﾁｪｰﾝ	2	[FC][FCS35][FCS45][FCS55]
-	09001-10091		CHAIN,ROLLER VFHM700 ﾁｪｰﾝ	2	[FC][FCS35][FCS45][FCS55]
-	09001-10095		CHAIN,ROLLER VFHM750 ﾁｪｰﾝ	2	[FC][FCS35][FCS45][FCS55]
K1	277P0-89811		KIT,OVERHAUL ｵｰﾊﾞｰﾎｰﾙｷｯﾄ	2	INC.1-3,5-7

FIG.226 MAST PIPING[VFHM39A]

(M5020830) マストパイピング

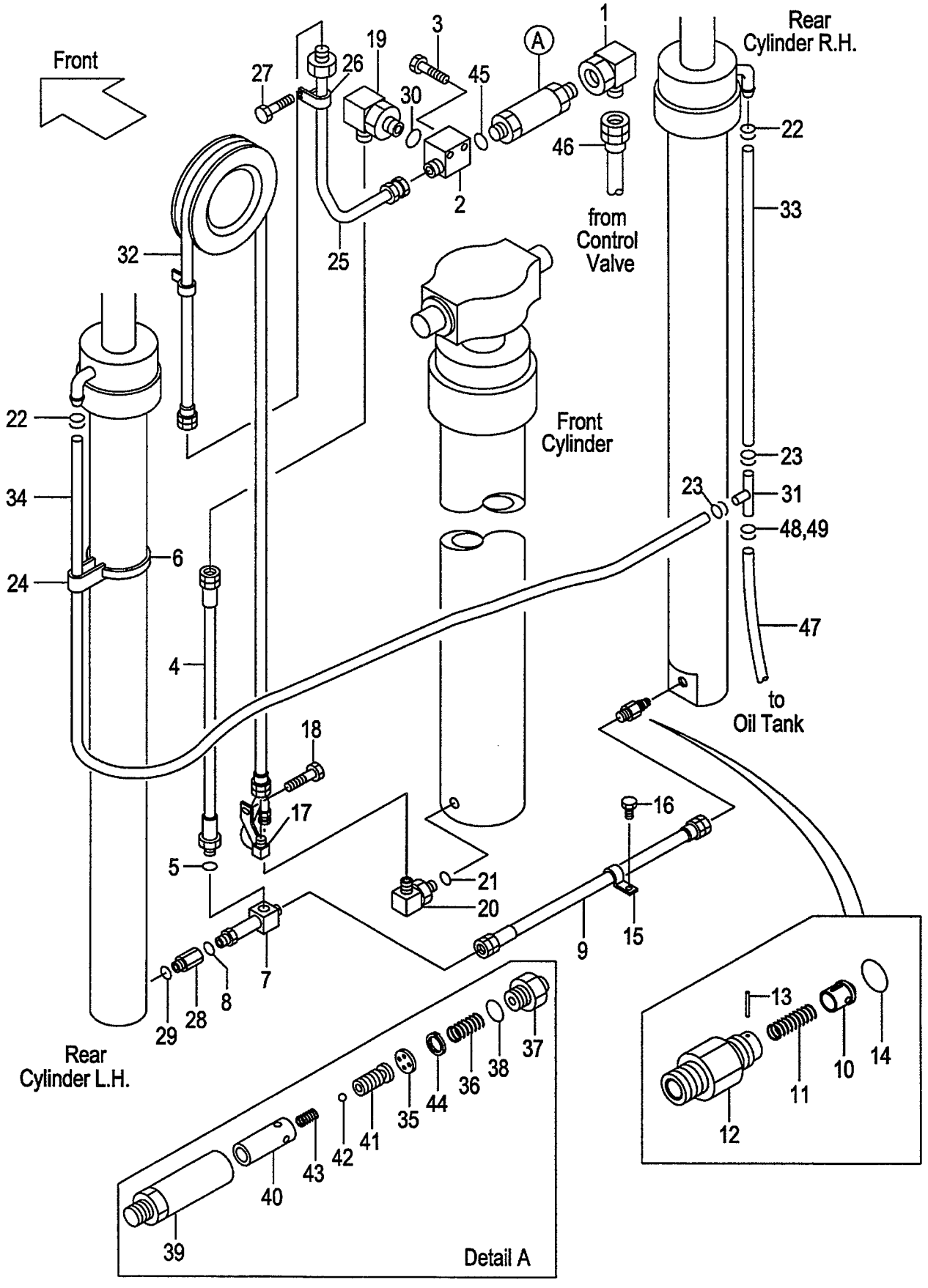

A:VFHM39A(2T)
B:VFHM39A(2.5T)

Item No	Part No.	Mark	Description		Req'd	Remarks : Serial No.
1	62150-14321		ELBOW	ｴﾙﾎﾞ	1	
2	277P0-92061		THREE-WAY	ｽﾘｰｳｴｲ	1	
3	01184-10060		BOLT	ﾎﾞﾙﾄ	2	
A1	239A0-92101		HOSE-ASSY	ﾎｰｽｱｯｾﾝ	1	INC.4,5
4	232A0-92141		HOSE	ﾎｰｽ	1	
5	03320-00180		O-RING	Oﾘﾝｸﾞ	1	
6	04913-21380		BAND	ﾊﾞﾝﾄﾞ	2	
A2	234A8-41101		THREE-WAY-ASSY	ｽﾘｰｳｪｲｱｯｾﾝ	1	INC.7,8
7	NO PART NO.	#	THREE-WAY	ｽﾘｰｳｴｲ	1	
8	03320-00140		O-RING	Oﾘﾝｸﾞ	1	
9	277T0-62071		HOSE	ﾎｰｽ	1	
A3	234A8-40701		VALVE-ASSY,CUT	ｶｯﾄﾊﾞﾙﾌﾞｱｯｾﾝ	1	INC.10-14
10	234A8-42602		PISTON	ﾋﾟｽﾄﾝ	1	
11	234A8-42611		SPRING	ｽﾌﾟﾘﾝｸﾞ	1	
12	234A8-42622		NIPPLE	ﾆｯﾌﾟﾙ	1	
13	02270-01014		PIN	ﾋﾟﾝ	1	
14	03320-00140		O-RING	Oﾘﾝｸﾞ	1	
15	214A8-43081		CLIP	ｸﾘｯﾌﾟ	1	
16	01184-10020		BOLT & WASHER	ﾎﾞﾙﾄ&ﾜｯｼｬ	1	
17	277T0-90151		PIPE	ﾊﾟｲﾌﾟ	1	
18	01186-10020		BOLT & WASHER	ﾎﾞﾙﾄ&ﾜｯｼｬ	1	
19	04150-00404		ELBOW	ｴﾙﾎﾞ	1	
A4	229F0-91001		ELBOW-ASSY	ｴﾙﾎﾞｱｯｾﾝ	1	INC.20,21
20	NO PART NO.	#	ELBOW	ｴﾙﾎﾞ	1	
21	03320-00240		O-RING	Oﾘﾝｸﾞ	1	
22	04911-00018		CLIP	ｸﾘｯﾌﾟ	2	
-	24329-46201		CLIP	ｸﾘｯﾌﾟ	2	[FC][RTL][CS35][FCS35] [FCS45][FCS55]
23	04911-00018		CLIP	ｸﾘｯﾌﾟ	2	
-	04911-00021		CLIP	ｸﾘｯﾌﾟ	2	[FC][RTL][CS35][FCS35] [FCS45][FCS55]
24	23678-42401		BAND,HOSE	ﾊﾞﾝﾄﾞ	2	
-	53675-54101		BAND,HOSE	ﾊﾞﾝﾄﾞ	2	[FC][RTL][CS35][FCS35] [FCS45][FCS55]
25	239A0-90161		PIPE	ﾊﾟｲﾌﾟ	1	INC.26
26	23200-62171		CLIP	ｸﾘｯﾌﾟ	1	
27	01183-06016		BOLT & WASHER	ﾎﾞﾙﾄ&ﾜｯｼｬ	2	
28	234A0-62111		ADAPTER	ｱﾀﾞﾌﾟﾀ	1	
29	03320-00140		O-RING	Oﾘﾝｸﾞ	1	
30	03320-00180		O-RING	Oﾘﾝｸﾞ	1	
31	23679-45051		THREE-WAY	ｽﾘｰｳｴｲ	1	
-	53675-55051		THREE-WAY	ｽﾘｰｳｴｲ	1	[FC][RTL][CS35][FCS35] [FCS45][FCS55]
32	04601-44200		HOSE VFHM360	ﾎｰｽ	1	
-	04601-44224		HOSE VFHM400	ﾎｰｽ	1	
-	04601-44249		HOSE VFHM435	ﾎｰｽ	1	
-	04601-44279		HOSE VFHM480	ﾎｰｽ	1	
-	04601-44299		HOSE VFHM500	ﾎｰｽ	1	
-	04601-44323		HOSE VFHM540	ﾎｰｽ	1	
-	04601-44331		HOSE VFHM550	ﾎｰｽ	1	

FIG.226 MAST PIPING[VFHM39A]

(M5020830) マストパイピング

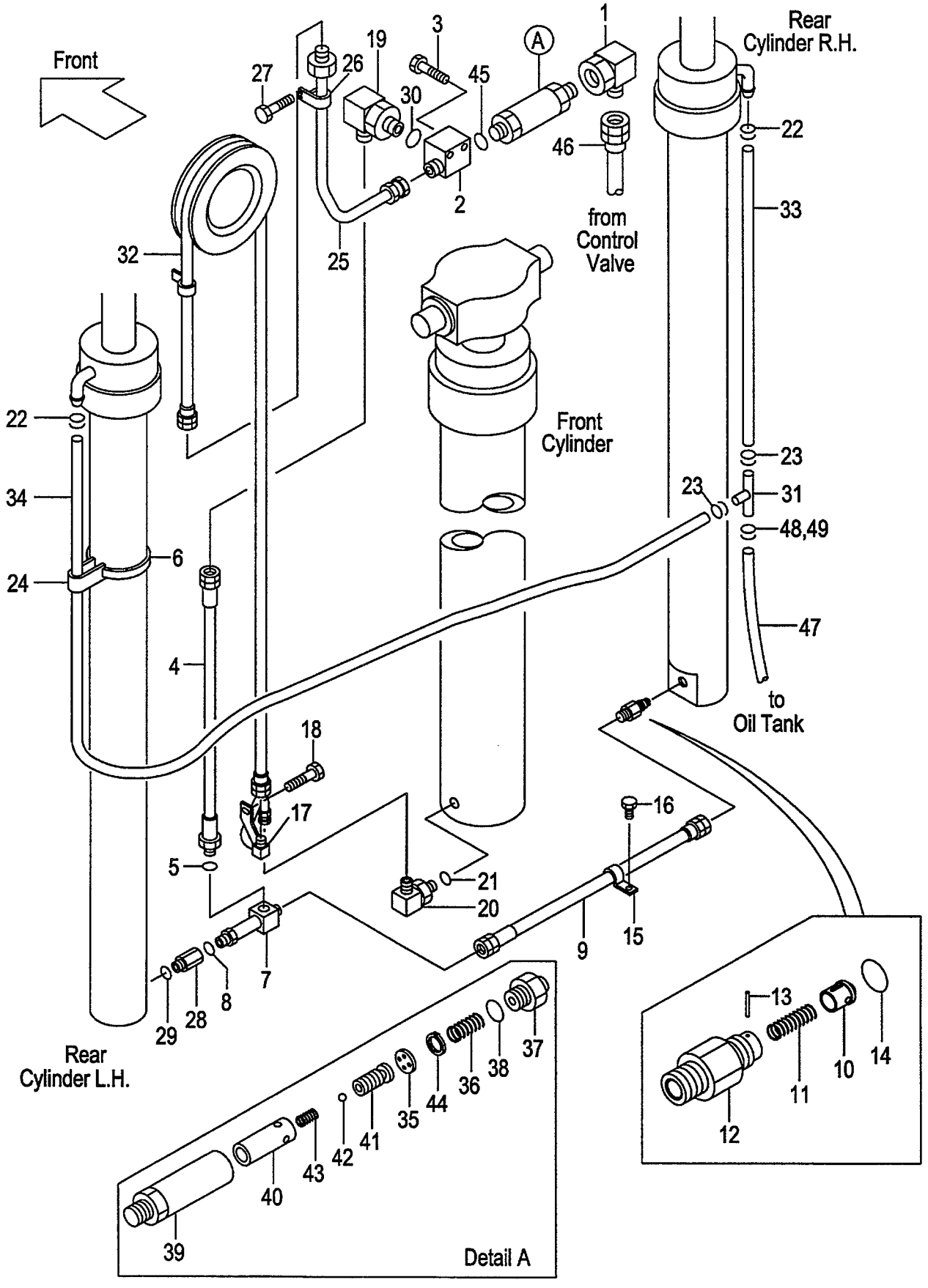

A:VFHM39A(2T)
B:VFHM39A(2.5T)

FIG.226
(M5020830)

Item No	Part No.	Mark	Description	Req'd	Remarks : Serial No.
-	04601-44367		HOSE VFHM600 ホース	1	
-	04601-44410		HOSE VFHM650 ホース	1	
-	04601-44453		HOSE VFHM700 ホース	1	
-	04601-44485		HOSE VFHM750 ホース	1	
33	23678-40080		TUBE,RH VFHM360 チューブ゛	1	
-	23678-40095		TUBE,RH VFHM400 チューブ゛	1	
-	23678-40105		TUBE,RH VFHM435 チューブ゛	1	
-	23678-40120		TUBE,RH VFHM480 チューブ゛	1	
-	23678-40130		TUBE,RH VFHM500 チューブ゛	1	
-	23678-40145		TUBE,RH VFHM540 チューブ゛	1	
-	23678-40150		TUBE,RH VFHM550 チューブ゛	1	
-	23678-40165		TUBE,RH VFHM600 チューブ゛	1	
-	23678-40190		TUBE,RH VFHM650 チューブ゛	1	
-	23678-40210		TUBE,RH VFHM700 チューブ゛	1	
-	23678-40255		TUBE,RH VFHM750 チューブ゛	1	
-	04710-04080		HOSE,RH VFHM360 ホース	1	[FC][RTL][CS35][FCS35] [FCS45][FCS55]
-	04710-04095		HOSE,RH VFHM400 ホース	1	[FC][RTL][CS35][FCS35] [FCS45][FCS55]
-	04710-04105		HOSE,RH VFHM435 ホース	1	[FC][RTL][CS35][FCS35] [FCS45][FCS55]
-	04710-04120		HOSE,RH VFHM480 ホース	1	[FC][RTL][CS35][FCS35] [FCS45][FCS55]
-	04710-04130		HOSE,RH VFHM500 ホース	1	[FC][RTL][CS35][FCS35] [FCS45][FCS55]
-	04710-04145		HOSE,RH VFHM540 ホース	1	[FC][RTL][CS35][FCS35] [FCS45][FCS55]
-	04710-04150		HOSE,RH VFHM550 ホース	1	[FC][RTL][CS35][FCS35] [FCS45][FCS55]
-	04710-04165		HOSE,RH VFHM600 ホース	1	[FC][RTL][CS35][FCS35] [FCS45][FCS55]
-	04710-04190		HOSE,RH VFHM650 ホース	1	[FC][RTL][CS35][FCS35] [FCS45][FCS55]
-	04710-04210		HOSE,RH VFHM700 ホース	1	[FC][RTL][CS35][FCS35] [FCS45][FCS55]
-	04710-04225		HOSE,RH VFHM750 ホース	1	[FC][RTL][CS35][FCS35] [FCS45][FCS55]
34	23678-40145		TUBE,LH VFHM360 チューブ゛	1	
-	23678-40160		TUBE,LH VFHM400 チューブ゛	1	
-	23678-40170		TUBE,LH VFHM435 チューブ゛	1	
-	23678-40185		TUBE,LH VFHM480 チューブ゛	1	
-	23678-40195		TUBE,LH VFHM500 チューブ゛	1	
-	23678-40210		TUBE,LH VFHM540 チューブ゛	1	
-	23678-40215		TUBE,LH VFHM550 チューブ゛	1	
-	23678-40230		TUBE,LH VFHM600 チューブ゛	1	
-	23678-40255		TUBE,LH VFHM650 チューブ゛	1	
-	23678-40275		TUBE,LH VFHM700 チューブ゛	1	
-	23678-40290		TUBE,LH VFHM750 チューブ゛	1	
-	04710-04145		HOSE,LH VFHM360 ホース	1	[FC][RTL][CS35][FCS35] [FCS45][FCS55]

FIG.226 MAST PIPING[VFHM39A]

(M5020830) マストパイピング

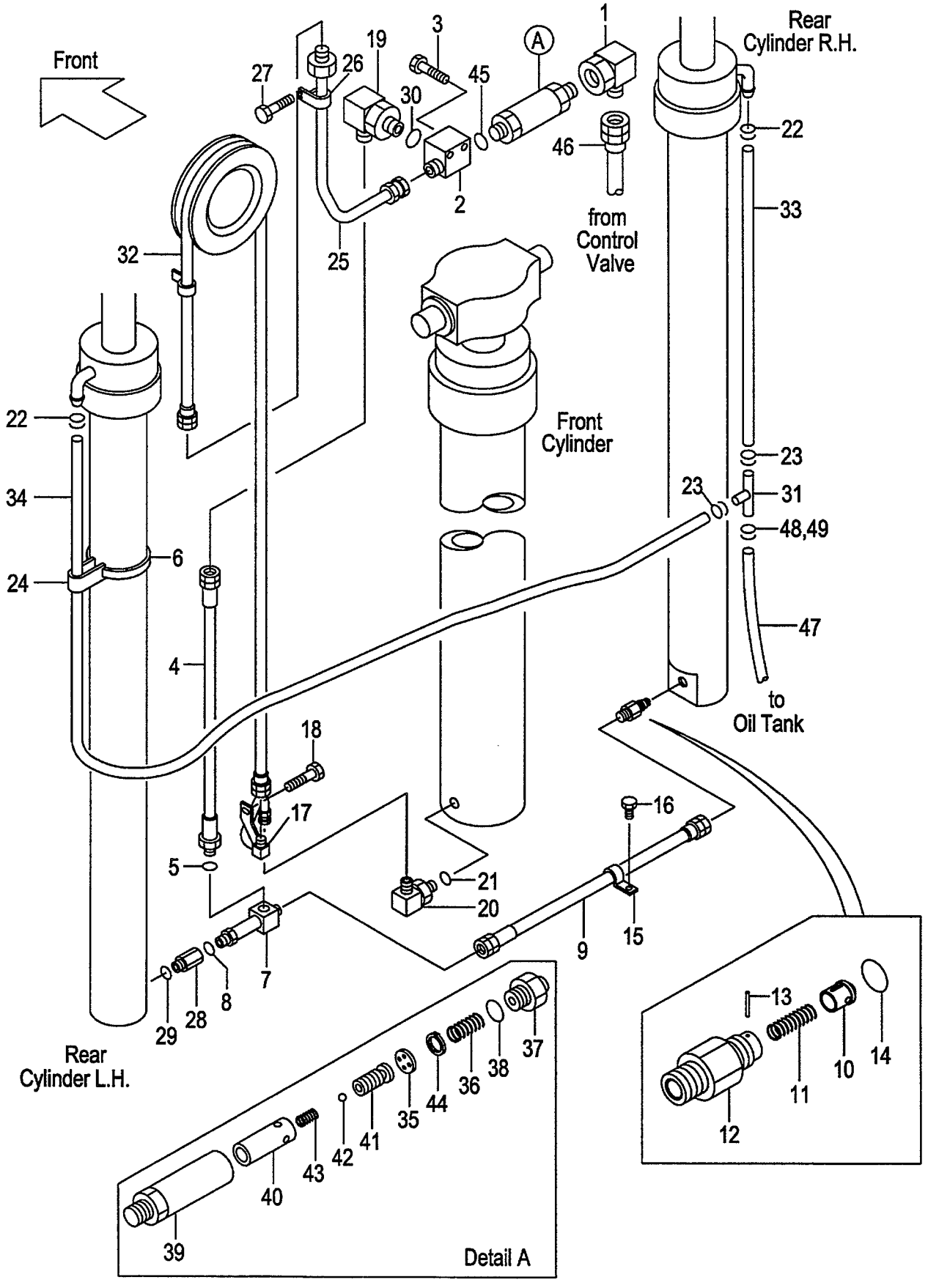

A:VFHM39A(2T)
B:VFHM39A(2.5T)

Item No	Part No.	Mark	Description		Req'd	Remarks : Serial No.
-	04710-04160		HOSE,LH VFHM400	ホース	1	[FC][RTL][CS35][FCS35] [FCS45][FCS55]
-	04710-04170		HOSE,LH VFHM435	ホース	1	[FC][RTL][CS35][FCS35] [FCS45][FCS55]
-	04710-04185		HOSE,LH VFHM480	ホース	1	[FC][RTL][CS35][FCS35] [FCS45][FCS55]
-	04710-04195		HOSE,LH VFHM500	ホース	1	[FC][RTL][CS35][FCS35] [FCS45][FCS55]
-	04710-04210		HOSE,LH VFHM540	ホース	1	[FC][RTL][CS35][FCS35] [FCS45][FCS55]
-	04710-04215		HOSE,LH VFHM550	ホース	1	[FC][RTL][CS35][FCS35] [FCS45][FCS55]
-	04710-04230		HOSE,LH VFHM600	ホース	1	[FC][RTL][CS35][FCS35] [FCS45][FCS55]
-	04710-04255		HOSE,LH VFHM650	ホース	1	[FC][RTL][CS35][FCS35] [FCS45][FCS55]
-	04710-04275		HOSE,LH VFHM700	ホース	1	[FC][RTL][CS35][FCS35] [FCS45][FCS55]
-	04710-04290		HOSE,LH VFHM750	ホース	1	[FC][RTL][CS35][FCS35] [FCS45][FCS55]
A5	234A8-41001		REGULATOR-ASSY,FLOW	レギュレータアッセン	1	INC.35-44
35	NO PART NO.	#	PLATE	プレート	1	
36	27979-43101		SPRING	スプリング	1	
37	NO PART NO.	#	NIPPLE	ニップル	1	
38	03300-00280		O-RING	Oリング	1	
39	NO PART NO.	#	CASE	ケース	1	
40	NO PART NO.	#	SLEEVE	スリーブ	1	
41	NO PART NO.	#	PISTON	ピストン	1	
42	24459-42951		BALL,NYLON	ボール	1	
43	214A8-44151		SPRING	スプリング	1	
44	02110-00018		RING,SNAP	スナップリング	1	
45	03320-00180		O-RING	Oリング	1	
46	277T0-92131		HOSE	ホース	1	
47	23678-40110		TUBE	チューブ	1	
-	04710-04125		HOSE	ホース	1	[FC][RTL][CS35][FCS35] [FCS45][FCS55]
48	04911-00018		CLIP	クリップ	1	
-	04911-00021		CLIP	クリップ	1	[FC][RTL][CS35][FCS35] [FCS45][FCS55]
49	04914-00016		CLIP	クリップ	1	
-	04911-00021		CLIP	クリップ	1	[FC][RTL][CS35][FCS35] [FCS45][FCS55]

PARTS NUMBER INDEX

Part No.	Fig.No.	Part No.	Fig.No.	Part No.	Fig.No.	Part No.	Fig.No.
B-B3613-13001	79	B-21011-31702	177	B-23451-02212	79	B-30697-51102	209
B-B3613-13001	81	B-21011-31702	177	B-23451-02212	81	B-30697-51201	209
B-B6127-20612	194	B-21011-31702	177	B-23641-00313	79	B-30697-51202	209
B-B6341-01401	194	B-21011-32404	175	B-23641-00313	81	B-30697-51301	209
B-B6351-01401	194	B-21011-32404	176	B-23641-01609	79	B-30697-51302	209
B-B670B-00086	194	B-21011-32404	177	B-23641-01609	81	B-30697-51401	209
B-B670B-00087	194	B-21011-32404	177	B-23641-01610	79	B-30697-51402	209
B-C0003-30301	171	B-21011-32404	177	B-23641-01610	81	B-30697-51501	209
B-C0003-30301	172	B-21011-32801	175	B-23641-02218	79	B-30697-51502	209
B-C0003-30301	173	B-21011-32801	176	B-23641-02218	81	B-30697-51601	209
B-21001-00106	174	B-21011-32801	177	B-23641-02227	79	B-30697-51602	209
B-21001-00106	175	B-21011-32801	177	B-23641-02227	81	B-30697-51701	209
B-21001-00106	176	B-21011-32801	177	B-23641-02508	79	B-30697-51702	209
B-21001-00106	177	B-21013-36432	170	B-23641-02508	81	B-30697-51801	209
B-21001-00106	177	B-21013-36432	171	B-23641-03314	79	B-30697-51802	209
B-21001-00106	177	B-21013-36432	172	B-23641-03314	81	B-30697-51901	209
B-21001-00689	175	B-21013-36432	173	B-23641-03716	79	B-30697-51902	209
B-21001-00689	176	B-21013-36432	175	B-23641-03716	79	B-30697-52001	209
B-21001-00689	177	B-21013-36433	170	B-23641-03716	81	B-30697-52002	209
B-21001-00689	177	B-21013-36433	171	B-23641-03716	81	B-30697-52101	209
B-21001-00689	177	B-21013-36433	172	B-23641-04303	79	B-30697-52102	209
B-21001-90408	175	B-21013-36433	173	B-23641-04303	81	B-30697-52201	209
B-2101A-30016	170	B-21013-36433	176	B-23642-00911	79	B-30697-52202	209
B-2101A-30016	171	B-21013-37344	170	B-23642-00911	81	B-30697-52301	209
B-2101A-30016	172	B-21013-37344	171	B-23643-00296	79	B-30697-52302	209
B-2101A-30016	173	B-21013-37344	172	B-23643-00296	81	B-30697-52401	209
B-21011-30134	170	B-21013-37344	173	B-23643-00526	79	B-30697-52402	209
B-21011-30134	171	B-21013-37344	174	B-23643-00526	81	B-30697-52501	209
B-21011-30134	172	B-21013-37349	170	B-23643-00618	79	B-30697-52502	209
B-21011-30134	173	B-21013-37349	171	B-23643-00618	81	B-30697-52601	209
B-21011-30507	175	B-21013-37349	171	B-23711-01922	79	B-30697-52602	209
B-21011-30507	177	B-21013-37349	172	B-23711-01922	81	B-30697-52701	209
B-21011-30507	177	B-21013-37349	172	B-23711-03701	79	B-30697-52702	209
B-21011-30507	177	B-21013-37349	173	B-23711-03701	81	B-30697-52801	209
B-21011-30528	176	B-21013-37349	173	B-30121-50102	209	B-30697-52802	209
B-21011-30603	175	B-21013-37349	174	B-30131-40017	209	B-30697-52901	209
B-21011-30603	176	B-21013-39701	171	B-30131-50018	209	B-30697-52902	209
B-21011-30603	177	B-21013-39701	172	B-30141-35012	194	B-3070A-00103	194
B-21011-30603	177	B-21013-39701	173	B-30141-91049	209	B-3070B-00217	194
B-21011-30603	177	B-21013-39701	177	B-30151-03006	194	B-30961-03012	194
B-21011-30604	175	B-21013-39701	177	B-30161-50046	209	B-30961-04012	209
B-21011-30604	176	B-21013-39701	177	B-30161-91774	209	B-91111-60102	175
B-21011-30604	177	B-21021-30103	171	B-30191-30025	194	B-91111-60102	176
B-21011-30604	177	B-21021-30104	171	B-30191-40025	209	B-91111-60102	177
B-21011-30604	177	B-21031-30103	172	B-30286-95303	209	B-91111-60102	177
B-21011-30618	176	B-21031-30104	172	B-30286-95303	209	B-91111-60102	177
B-21011-30702	175	B-21041-30103	173	B-30286-95303	209	B-91511-08180	174
B-21011-30702	176	B-21041-30104	173	B-30286-95303	209	B-92703-06181	174
B-21011-30702	177	B-21731-30306	174	B-30286-95303	209	B-92703-06181	175
B-21011-30702	177	B-21731-30307	174	B-30296-11903	209	B-92703-06181	176
B-21011-30702	177	B-21731-30406	174	B-30296-11903	209	B-92703-06181	177
B-21011-31011	175	B-21731-30502	174	B-30311-01403	194	B-92703-06181	177
B-21011-31011	176	B-21731-30613	174	B-30421-30005	194	B-92703-06181	177
B-21011-31011	177	B-21731-30703	174	B-30431-35009	194	B-93118-08652	170
B-21011-31011	177	B-21731-30802	174	B-30461-50039	209	B-93118-08652	171
B-21011-31011	177	B-21733-40212	174	B-3050A-00093	209	B-93118-08652	172
B-21011-31105	170	B-23451-02016	79	B-3050B-00119	209	B-93118-08652	173
B-21011-31106	170	B-23451-02016	81	B-30551-91003	209	B-93128-10082	170
B-21011-31702	175	B-23451-02106	79	B-3065B-00211	194	B-93128-10082	171
B-21011-31702	176	B-23451-02106	81	B-30697-51101	209	B-93128-10082	172

PARTS NUMBER INDEX

Part No.	Fig.No.	Part No.	Fig.No.	Part No.	Fig.No.	Part No.	Fig.No.
B-93128-10082	173	01100-08025	123	01103-16065	208	01183-08016	133
B-93364-08052	174	01100-08045	22	01103-16065	214	01183-08016	150
B-94101-20512	79	01100-08045	23	01103-16065	222	01183-08016	154
B-94101-20512	81	01100-08045	62	01106-12040	76	01183-08020	190
B-94721-38151	79	01100-08045	74	01109-08020	20	01183-08020	193
B-94721-38151	81	01100-08050	140	01109-12030	149	01183-08022	21
B-95111-01200	174	01100-08065	6	01110-30090	147	01183-08022	22
B-95112-06000	194	01100-10030	130	01110-30150	146	01183-08025	190
B-95113-01800	175	01100-10030	131	01110-30150	148	01183-08035	75
B-95113-02400	174	01100-10030	133	01113-30230	148	01183-08040	62
B-95121-06000	79	01100-12020	121	01113-30300	148	01183-08040	66
B-95121-06000	79	01100-12030	84	01120-08035	126	01183-10035	62
B-95121-06000	81	01100-12030	86	01120-08035	127	01183-10035	66
B-95121-06000	81	01100-12045	22	01120-08035	128	01184-10016	64
B-95121-07000	194	01100-12070	225	01120-08035	129	01184-10020	132
B-95133-00500	176	01100-14025	207	01123-10045	64	01184-10020	214
B-95151-06300	79	01100-14025	207	01141-06012	84	01184-10020	217
B-95151-06300	81	01100-14025	213	01141-06012	85	01184-10020	226
B-95713-06000	194	01100-14025	221	01141-06012	85	01184-10025	56
B-96111-10613	194	01100-14030	207	01141-06012	85	01184-10025	69
B-96401-30159	194	01100-14030	213	01141-06012	86	01184-10025	72
B-97123-01111	174	01100-14030	213	01170-04012	20	01184-10025	131
HC26094-17021	80	01100-14030	221	01170-05045	71	01184-10025	133
HC32G4-10101	80	01100-14030	221	01171-06025	115	01184-10030	130
HC516G2-42411	80	01100-14035	110	01171-06025	116	01184-10030	131
LB24H8-10131	211	01100-14035	213	01181-08016	151	01184-10030	132
R-400-50647-03	167	01100-14035	221	01181-08016	152	01184-10030	133
R-402-00012-12	167	01100-16016	216	01181-08016	153	01184-10030	134
R-402-00710-12	169	01100-16016	224	01181-08016	155	01184-10030	135
R-402-65004-28	169	01100-16045	87	01182-08025	18	01184-10030	136
R-403-21988	168	01100-16055	222	01182-08025	19	01184-10030	137
R-403-24323	169	01100-16065	141	01183-05010	20	01184-10040	62
01030-04014	52	01100-16075	216	01183-05012	204	01184-10040	66
01030-04020	57	01100-16075	224	01183-05012	204	01184-10050	62
01030-05065	39	01103-08016	63	01183-06012	179	01184-10050	62
01033-05014	27	01103-08016	75	01183-06012	180	01184-10050	66
01033-05014	28	01103-08016	85	01183-06012	181	01184-10050	66
01044-04014	52	01103-08020	64	01183-06012	182	01184-10055	62
01066-08008	63	01103-08020	66	01183-06016	29	01184-10055	66
01066-08008	70	01103-08025	71	01183-06016	145	01184-10055	131
01066-08008	75	01103-08035	68	01183-06016	218	01184-10055	133
01066-10012	194	01103-08040	67	01183-06016	226	01184-10060	226
01066-10012	194	01103-08040	74	01183-06025	29	01184-10065	62
01100-05010	1	01103-08045	68	01183-08016	3	01184-10065	66
01100-06010	35	01103-08060	71	01183-08016	4	01184-12025	206
01100-06010	37	01103-10016	66	01183-08016	17	01184-12025	212
01100-06012	124	01103-10020	65	01183-08016	22	01184-12025	220
01100-06012	125	01103-10020	216	01183-08016	23	01184-12030	79
01100-06020	57	01103-10020	224	01183-08016	30	01184-12030	81
01100-06055	184	01103-10030	64	01183-08016	63	01184-12040	206
01100-06055	185	01103-10030	67	01183-08016	75	01184-12040	212
01100-06055	186	01103-10035	74	01183-08016	84	01184-12040	220
01100-08020	43	01103-10050	74	01183-08016	86	01184-12050	206
01100-08020	44	01103-10060	131	01183-08016	120	01184-12050	212
01100-08020	45	01103-10060	133	01183-08016	121	01185-06012	1
01100-08020	46	01103-10065	67	01183-08016	122	01185-06012	20
01100-08020	47	01103-10097	1	01183-08016	122	01185-06016	27
01100-08020	59	01103-10097	2	01183-08016	124	01185-06016	28
01100-08020	60	01103-14040	209	01183-08016	125	01185-08012	30
01100-08020	166	01103-14040	217	01183-08016	131	01185-08016	6

PARTS NUMBER INDEX

Part No.	Fig.No.	Part No.	Fig.No.	Part No.	Fig.No.	Part No.	Fig.No.
01185-08016	8	01218-10040	2	01400-00012	225	02000-00005	179
01185-08016	9	01219-12030	1	01400-00018	209	02000-00005	180
01185-08016	10	01400-00004	57	01400-00018	216	02000-00005	181
01185-08016	11	01400-00006	1	01400-00018	224	02000-00005	182
01185-08016	13	01400-00006	29	01400-00018	225	02000-00006	1
01185-08016	14	01400-00006	30	01400-10016	90	02000-00006	35
01185-08016	15	01400-00006	57	01400-10016	92	02000-00006	37
01185-08016	20	01400-00006	58	01400-10016	94	02000-00006	124
01185-08016	21	01400-00006	60	01400-10016	96	02000-00006	124
01185-08016	22	01400-00006	124	01400-10020	76	02000-00006	125
01185-08016	22	01400-00006	125	01400-20008	18	02000-00006	125
01185-08016	23	01400-00006	130	01400-20008	19	02000-00006	132
01185-08016	29	01400-00006	131	01400-20008	25	02000-00006	154
01185-08016	30	01400-00006	132	01400-30008	25	02000-00008	1
01185-08016	31	01400-00006	133	01402-00008	123	02000-00008	18
01185-08016	38	01400-00006	154	01402-00008	126	02000-00008	19
01185-08016	48	01400-00008	1	01402-00008	127	02000-00008	22
01185-08016	193	01400-00008	18	01402-00008	128	02000-00008	22
01185-08020	14	01400-00008	19	01402-00008	129	02000-00008	23
01185-08020	44	01400-00008	22	01402-00008	130	02000-00008	25
01185-08020	47	01400-00008	29	01402-00008	130	02000-00008	85
01185-08020	67	01400-00008	43	01402-00010	130	02000-00008	130
01185-08020	150	01400-00008	44	01402-00010	131	02000-00008	131
01185-08020	153	01400-00008	45	01402-00010	133	02000-00008	133
01185-08030	22	01400-00008	46	01402-00010	165	02000-00008	150
01185-10055	167	01400-00008	47	01402-00010	205	02000-00008	151
01185-10055	169	01400-00008	48	01402-00010	211	02000-00008	162
01186-06012	155	01400-00008	52	01402-00010	219	02000-00010	12
01186-06012	155	01400-00008	59	01402-00012	84	02000-00010	18
01186-06020	17	01400-00008	60	01402-00012	86	02000-00010	19
01186-08016	126	01400-00008	62	01402-00014	78	02000-00010	20
01186-08016	127	01400-00008	74	01402-00014	82	02000-00010	49
01186-08016	128	01400-00008	75	01402-00022	83	02000-00010	65
01186-08016	129	01400-00008	140	01402-00022	83	02000-00010	84
01186-08020	49	01400-00008	162	01402-00022	109	02000-00010	85
01186-08020	125	01400-00008	162	01402-00022	111	02000-00010	86
01186-08025	17	01400-00008	163	01402-00024	109	02000-00010	89
01186-08025	56	01400-00008	164	01402-00024	111	02000-00010	130
01186-10016	193	01400-00008	165	01402-10010	79	02000-00010	131
01186-10020	49	01400-00008	166	01402-10010	81	02000-00010	132
01186-10020	49	01400-00010	49	01402-10018	109	02000-00010	133
01186-10020	154	01400-00010	62	01402-10018	111	02000-00010	150
01186-10020	226	01400-00010	64	01407-00022	109	02000-00010	165
01186-10025	49	01400-00010	66	01407-00022	111	02000-00012	22
01186-10030	89	01400-00010	66	01412-00030	84	02000-00012	78
01186-10030	168	01400-00010	74	01412-00030	85	02000-00016	124
01186-12025	115	01400-00010	84	01412-00030	86	02000-00016	125
01186-12025	116	01400-00010	85	01412-10016	83	02000-00016	131
01186-12025	117	01400-00010	86	01412-10016	83	02000-00016	132
01186-12025	118	01400-00010	89	01412-10016	84	02000-00016	133
01186-12025	119	01400-00010	130	01412-10016	84	02000-00016	216
01186-12030	149	01400-00010	131	01412-10016	86	02000-00016	224
01186-12035	115	01400-00010	132	01412-10016	86	02000-00016	224
01186-12035	116	01400-00010	133	01412-10016	109	02000-00022	64
01186-12035	152	01400-00012	102	01412-10016	109	02000-00024	63
01186-12045	21	01400-00012	104	01412-10016	111	02000-00027	75
01186-12045	22	01400-00012	106	01412-10016	111	02000-00030	84
01186-12045	23	01400-00012	108	01420-00006	31	02000-00030	85
01213-10025	63	01400-00012	124	02000-00004	20	02000-00030	86
01213-10025	75	01400-00012	125	02000-00004	57	02000-20010	149

PARTS NUMBER INDEX

Part No.	Fig.No.	Part No.	Fig.No.	Part No.	Fig.No.	Part No.	Fig.No.
02000-20010	155	02010-00016	141	02100-00040	209	02262-06015	124
02000-20010	209	02010-00016	216	02100-00040	216	02262-06015	125
02000-20010	209	02010-00016	216	02100-00040	224	02262-06020	132
02000-20010	217	02010-00016	222	02100-00040	225	02262-06025	132
02000-20010	225	02010-00016	224	02100-00045	206	02262-08020	131
02000-20010	225	02010-00016	224	02100-00045	212	02262-08020	133
02000-20016	216	02010-00030	146	02110-00018	210	02262-08025	130
02001-00008	25	02010-00030	147	02110-00018	218	02262-10030	130
02001-00012	149	02010-00030	148	02110-00018	226	02262-10030	131
02003-20010	67	02010-10006	84	02110-00030	71	02262-10030	132
02010-00004	52	02010-10006	85	02110-00037	80	02262-10030	133
02010-00004	57	02010-10006	85	02110-00062	110	02270-01014	210
02010-00005	1	02010-10006	85	02110-00090	225	02270-01014	218
02010-00006	1	02010-10006	86	02120-00050	65	02270-01014	226
02010-00006	30	02010-20010	209	02121-00058	70	02360-05019	64
02010-00006	31	02010-20010	209	02121-00080	65	02360-05019	75
02010-00006	35	02010-20010	217	02200-02016	131	02432-01008	196
02010-00006	37	02010-20010	225	02200-02016	133	02432-01008	220
02010-00006	57	02010-20010	225	02200-02020	130	03000-06207	65
02010-00006	124	02011-00008	63	02200-03030	209	03000-06208	65
02010-00006	125	02011-00008	64	02200-03030	216	03000-06213	73
02010-00006	154	02011-00008	66	02200-03030	224	03000-06306	65
02010-00006	184	02011-00008	67	02200-03030	225	03000-06306	69
02010-00006	185	02011-00008	71	02200-04025	124	03000-06306	70
02010-00006	186	02011-00008	74	02200-04025	125	03000-06306	70
02010-00008	1	02011-00008	75	02200-04025	131	03010-06904	80
02010-00008	6	02011-00008	85	02200-04025	132	03042-06308	225
02010-00008	18	02011-00010	64	02200-04025	133	03071-30207	84
02010-00008	18	02011-00010	66	02200-04040	147	03071-30207	85
02010-00008	19	02011-00010	67	02200-06055	84	03071-30207	86
02010-00008	19	02011-00010	74	02200-06055	85	03071-30211	84
02010-00008	22	02011-00010	216	02200-06055	86	03071-30211	85
02010-00008	23	02011-00010	224	02200-16010	124	03071-30211	86
02010-00008	25	02011-00012	76	02200-16010	125	03071-30214	76
02010-00008	52	02011-00012	102	02200-16010	179	03126-83201	84
02010-00008	62	02011-00012	104	02200-16010	180	03126-83201	85
02010-00008	74	02011-00012	106	02200-16010	181	03126-83201	86
02010-00008	140	02011-00012	108	02200-16010	182	03146-13201	84
02010-00008	162	02011-00014	209	02200-32020	131	03146-13201	84
02010-00008	162	02011-00014	217	02200-32020	133	03146-13201	85
02010-00008	163	02011-00016	90	02200-32025	130	03146-13201	86
02010-00008	164	02011-00016	92	02200-32025	131	03146-13201	86
02010-00008	165	02011-00016	94	02200-32025	132	03190-00006	216
02010-00008	166	02011-00016	96	02200-32025	133	03190-00006	217
02010-00010	84	02011-00016	208	02200-32032	83	03190-00006	217
02010-00010	85	02011-00016	214	02200-32032	83	03190-00006	224
02010-00010	86	02011-00016	222	02200-32032	84	03190-00013	64
02010-00010	131	02013-00008	20	02200-32032	84	03192-00012	76
02010-00010	133	02013-00008	25	02200-32032	86	03192-10012	76
02010-00012	22	02013-00012	149	02200-32032	86	03217-08501	84
02010-00012	121	02100-00012	71	02200-32032	109	03217-08501	85
02010-00012	225	02100-00020	80	02200-32032	109	03217-08501	86
02010-00014	110	02100-00022	64	02200-32032	111	03300-00160	64
02010-00014	207	02100-00025	63	02200-32032	111	03300-00280	226
02010-00014	207	02100-00025	75	02212-06016	68	03310-00300	64
02010-00014	213	02100-00028	75	02212-10020	76	03310-00600	63
02010-00014	213	02100-00030	65	02212-10020	110	03310-00600	75
02010-00014	221	02100-00030	69	02212-10025	71	03310-00800	72
02010-00014	221	02100-00040	65	02212-12020	64	03320-00110	110
02010-00016	87	02100-00040	70	02212-12020	67	03320-00110	131

PARTS NUMBER INDEX

Part No.	Fig.No.	Part No.	Fig.No.	Part No.	Fig.No.	Part No.	Fig.No.
03320-00110	133	04601-44323	226	04710-04165	188	04911-00021	186
03320-00110	190	04601-44331	226	04710-04165	210	04911-00021	187
03320-00140	178	04601-44367	226	04710-04165	226	04911-00021	188
03320-00140	184	04601-44410	226	04710-04170	210	04911-00021	189
03320-00140	185	04601-44453	226	04710-04170	226	04911-00021	193
03320-00140	186	04601-44485	226	04710-04175	210	04911-00021	210
03320-00140	210	04691-02065	184	04710-04185	210	04911-00021	210
03320-00140	210	04691-02065	185	04710-04185	226	04911-00021	210
03320-00140	218	04691-02065	186	04710-04190	210	04911-00021	226
03320-00140	218	04691-04048	184	04710-04190	210	04911-00021	226
03320-00140	218	04691-04048	184	04710-04190	226	04911-00021	226
03320-00140	226	04691-04048	185	04710-04195	226	04911-00022	50
03320-00140	226	04691-04048	185	04710-04200	210	04911-00022	51
03320-00140	226	04691-04048	186	04710-04200	210	04911-00023	191
03320-00180	167	04691-04048	186	04710-04210	210	04911-00032	193
03320-00180	169	04691-04108	184	04710-04210	210	04911-00040	184
03320-00180	169	04691-04108	185	04710-04210	210	04911-00040	185
03320-00180	169	04710-04005	144	04710-04210	226	04911-00040	186
03320-00180	178	04710-04030	184	04710-04210	226	04911-00044	5
03320-00180	178	04710-04030	185	04710-04215	210	04911-00044	8
03320-00180	184	04710-04030	186	04710-04215	226	04911-00044	9
03320-00180	185	04710-04040	193	04710-04225	226	04911-00044	10
03320-00180	186	04710-04050	193	04710-04230	210	04911-00044	11
03320-00180	210	04710-04060	193	04710-04230	226	04911-00044	184
03320-00180	217	04710-04060	210	04710-04240	210	04911-00044	185
03320-00180	218	04710-04070	210	04710-04245	210	04911-00044	186
03320-00180	226	04710-04080	226	04710-04255	210	04911-00046	184
03320-00180	226	04710-04085	210	04710-04255	226	04911-00046	185
03320-00180	226	04710-04095	210	04710-04265	210	04911-00046	186
03320-00240	168	04710-04095	210	04710-04270	210	04911-00053	9
03320-00240	218	04710-04095	226	04710-04275	226	04911-00053	11
03320-00240	226	04710-04102	184	04710-04280	210	04911-00055	6
03320-00280	210	04710-04102	185	04710-04290	226	04911-00060	5
03320-00280	218	04710-04102	186	04710-04310	210	04911-00060	6
03320-00290	167	04710-04105	226	04710-04335	210	04911-00060	16
03320-00290	168	04710-04110	210	04901-00100	63	04911-00070	6
03320-00290	169	04710-04120	210	04901-00100	84	04911-00090	7
03320-00340	217	04710-04120	226	04901-00100	86	04913-10100	27
03320-00340	225	04710-04121	184	04901-00100	194	04913-10100	28
03340-00140	167	04710-04121	185	04901-00100	208	04913-10200	27
03340-00140	169	04710-04121	186	04901-00100	214	04913-10200	28
03350-00450	109	04710-04125	210	04901-00100	222	04913-10200	57
03350-00450	111	04710-04125	210	04901-00160	63	04913-11100	27
03350-00850	216	04710-04125	210	04901-00190	84	04913-11100	28
03350-00850	224	04710-04125	226	04901-00190	85	04913-11100	39
04000-00300	193	04710-04130	226	04901-00190	86	04913-11120	41
04134-20404	184	04710-04135	210	04901-00191	84	04913-11120	42
04134-20404	185	04710-04140	187	04901-00191	85	04913-11120	43
04134-20404	186	04710-04140	189	04901-00191	86	04913-11200	27
04138-00303	50	04710-04145	210	04911-00018	210	04913-11200	28
04150-00404	226	04710-04145	210	04911-00018	210	04913-11200	50
04150-20202	131	04710-04145	210	04911-00018	210	04913-11200	51
04150-20202	133	04710-04145	210	04911-00018	226	04913-11200	79
04150-20404	169	04710-04145	226	04911-00018	226	04913-11200	80
04150-30404	178	04710-04145	226	04911-00018	226	04913-11200	81
04601-44200	226	04710-04150	210	04911-00020	187	04913-11200	131
04601-44224	226	04710-04150	226	04911-00020	188	04913-11200	132
04601-44249	226	04710-04160	210	04911-00020	189	04913-11200	133
04601-44279	226	04710-04160	210	04911-00021	184	04913-11200	134
04601-44299	226	04710-04160	226	04911-00021	185	04913-11380	121

PARTS NUMBER INDEX

Part No.	Fig.No.	Part No.	Fig.No.	Part No.	Fig.No.	Part No.	Fig.No.
04913-11380	188	06712-60009	102	09001-10059	216	115G3-82411	70
04913-20380	191	06712-60009	103	09001-10059	216	115G3-82451	69
04913-20380	192	06712-60009	104	09001-10059	224	115G3-82471	65
04913-21380	210	06712-60009	105	09001-10063	209	115G3-82471	69
04913-21380	226	06731-00120	98	09001-10063	209	115G3-82491	71
04914-00016	210	06731-00120	100	09001-10063	225	115G3-82512	71
04914-00016	226	06804-70012	97	09001-10065	216	115G3-82522	71
04914-00019	144	06806-55015	99	09001-10065	224	115G3-82641	65
04914-00019	193	06806-60009	106	09001-10065	225	115G3-82641	69
04914-00019	218	06806-60009	106	09001-10067	209	115G3-82651	69
06001-55015	98	06806-60009	107	09001-10069	209	115G3-82671	69
06001-60009	104	06806-70012	94	09001-10069	209	116H3-82101	67
06001-60009	105	06806-70012	94	09001-10069	216	116H3-82101	69
06001-70012	92	06806-70012	95	09001-10069	225	116H3-82201	69
06001-70012	93	06806-70012	101	09001-10071	209	116H3-82201	71
06001-70012	100	06806-70012	101	09001-10071	224	120S3-22011	72
06001-70012	100	06807-60009	106	09001-10071	225	120S3-42011	65
06005-55015	98	06807-60009	106	09001-10073	216	120T3-82001	69
06005-60009	104	06807-70012	94	09001-10075	209	12003-12021	63
06005-60009	105	06807-70012	94	09001-10077	216	12003-42052	64
06005-70012	92	06841-55015	99	09001-10077	225	12003-42061	64
06005-70012	93	06841-60009	106	09001-10079	209	12003-42281	65
06005-70012	100	06841-70012	94	09001-10079	224	12003-42291	65
06005-70012	100	06841-70012	101	09001-10081	216	12003-42311	65
06006-55015	98	06841-70012	101	09001-10083	209	12003-42311	69
06006-60009	102	06843-55015	99	09001-10083	224	12003-42311	72
06006-60009	103	06843-60009	106	09001-10083	225	12003-42321	65
06006-60009	104	06843-70012	94	09001-10087	209	12003-42321	69
06006-60009	105	06843-70012	101	09001-10089	216	12003-42321	72
06006-70012	90	06843-70012	101	09001-10091	209	12003-42331	65
06006-70012	91	06851-55015	99	09001-10091	225	12003-42331	69
06006-70012	92	06851-60009	106	09001-10095	225	12003-42331	72
06006-70012	93	06851-70012	94	09001-10097	216	12003-42421	64
06006-70012	100	06851-70012	101	09001-10101	209	12003-42451	64
06006-70012	100	06851-70012	101	09001-10109	209	12003-42461	64
06007-55015	98	09001-10035	216	09192-30044	208	12003-43031	65
06007-60009	104	09001-10037	224	09192-30044	214	12003-43031	69
06007-60009	105	09001-10039	216	09192-30044	222	12163-82221	69
06007-70012	92	09001-10041	216	09192-30044	222	12163-82232	69
06007-70012	93	09001-10041	224	10113-40171	65	12163-82541	64
06007-70012	100	09001-10043	209	110F7-10271	167	12163-82541	67
06007-70012	100	09001-10045	216	110F7-12001	167	12163-82541	69
06701-55015	98	09001-10045	216	11243-82081	70	12163-82541	75
06701-70012	90	09001-10045	224	11243-82091	70	12163-82561	68
06701-70012	91	09001-10047	209	11243-82161	70	12163-82561	68
06701-70012	92	09001-10047	216	11243-82181	70	12163-82621	67
06701-70012	93	09001-10049	225	11243-82211	70	124G3-12011	63
06701-70012	100	09001-10051	209	114A3-10501	63	124G3-52011	73
06701-70012	100	09001-10051	216	114A3-12012	63	124T3-42651	69
06702-60009	102	09001-10051	216	114A3-12012	75	124T3-42661	69
06702-60009	103	09001-10051	224	114L3-12022	75	124T3-43001	65
06702-60009	104	09001-10053	209	114L3-12031	75	124T3-43041	18
06702-60009	105	09001-10053	224	115G3-82111	69	124T3-43041	19
06711-55015	98	09001-10053	225	115G3-82241	69	124U3-82081	69
06711-70012	90	09001-10055	209	115G3-82251	69	124U3-82091	69
06711-70012	91	09001-10055	216	115G3-82331	70	124U3-82521	69
06711-70012	92	09001-10057	216	115G3-82341	70	131A3-10201	63
06711-70012	93	09001-10057	224	115G3-82351	70	131A3-42021	65
06711-70012	100	09001-10057	225	115G3-82361	70	131M2-52001	67
06711-70012	100	09001-10059	209	115G3-82401	70	131N3-12011	75

PARTS NUMBER INDEX

Part No.	Fig.No.	Part No.	Fig.No.	Part No.	Fig.No.	Part No.	Fig.No.
131N3-12031	75	134B3-82011	67	142G3-82001	67	209K4-12501	82
131N3-12041	75	134B3-82021	67	142S3-12001	75	209K4-12511	78
131N3-12101	75	134B3-82031	67	14354-12211	79	209K4-12511	82
131N3-12151	75	134B3-82041	67	14354-12211	81	209K4-12521	78
132G3-80201	70	134B3-82051	67	14354-12221	79	209K4-12521	82
133H7-10301	169	134B3-82091	68	14354-12221	81	209K4-12531	78
134A3-10211	63	134B3-82101	67	14354-12251	79	209K4-12531	82
134A3-12001	63	134B3-82141	69	14354-12251	81	209K4-12541	78
134A3-12011	63	134B3-82281	67	14354-12261	79	209K4-12541	82
134A3-12021	63	134B3-82291	67	14354-12261	81	209K4-12561	78
134A3-12021	75	134B3-82301	67	14354-12271	78	209K4-12561	82
134A3-12031	63	134B3-82311	67	14354-12271	82	209P4-12111	78
134A3-12051	64	134B3-82321	67	14354-12321	79	209P4-12111	82
134A3-22001	72	134B3-82361	70	14354-12321	81	209P6-40401	150
134A3-22011	72	134B3-82371	70	14453-52071	73	209P6-42831	13
134A3-22021	72	134B3-82381	69	14453-52081	73	209P6-42831	14
134A3-22031	72	134B3-82401	70	15533-10301	63	209P6-42841	150
134A3-22041	72	134B3-89821	67	15573-42011	65	209P7-42161	155
134A3-40201	64	134B3-89821	69	15573-42151	64	209P7-62531	191
134A3-40221	65	134B3-89861	68	15573-42151	76	210F2-42011	39
134A3-42021	64	134G3-80201	70	15583-82141	68	210F2-42021	39
134A3-42031	64	134G3-80251	70	15583-82161	68	210F2-42031	39
134A3-42051	65	134G3-80301	67	15583-82172	68	210F2-42201	39
134A3-42071	65	134G3-80401	68	15583-82181	68	210F2-42211	39
134A3-42081	65	134G3-82001	68	15583-82211	68	210F2-42221	39
134A3-42101	65	134G3-82101	70	15583-82241	68	210F2-42231	39
134A3-42111	65	134G3-82111	70	15583-82441	69	210F8-42631	217
134A3-42121	65	134G3-82121	70	15583-82451	69	210F8-42631	217
134A3-42131	65	134G3-82131	70	15583-82461	69	21159-12501	197
134A3-42141	65	134G3-82141	70	15583-82521	67	21232-32551	18
134A3-42151	65	134G3-89811	70	15583-82541	67	21232-32551	19
134A3-42171	65	134G3-89831	70	15583-82571	71	21232-32551	20
134A3-42181	65	134G3-89851	68	15793-82321	71	21237-52051	141
134A3-42191	65	134H3-10201	75	15793-82341	71	21237-52051	141
134A3-42201	65	134H3-10211	75	15913-42511	65	21237-52062	141
134A3-42211	65	134H3-12011	75	15943-82651	71	21237-52062	141
134A3-42221	64	134H3-12022	75	15943-82661	71	213T1-02011	3
134A3-42221	69	135L3-82002	71	15943-82701	75	213T1-02021	3
134A3-42251	65	136F2-50002	62	16113-52121	73	21322-22011	17
134A3-42261	65	136F2-50042	62	16113-52141	73	214A0-51701	217
134A3-42271	65	136F3-42001	65	16402-54331	54	214A0-51711	217
134A3-42301	65	136G2-50002	66	16402-54331	58	214A0-51721	217
134A3-42321	65	136S2-50002	74	16402-54331	59	214A0-51731	217
134A3-42331	65	13683-82022	67	16402-54331	60	214A0-51741	217
134A3-42401	64	137B2-50003	66	19502-52551	75	214A0-51751	217
134A3-42411	64	137B3-80201	67	20224-30061	84	214A0-51761	217
134A3-42421	64	137B3-80211	67	20224-30061	86	214A0-51771	217
134A3-42431	64	138A2-50001	62	205A2-63311	30	214A0-51781	217
134A3-42451	64	138A2-50041	62	205A2-63311	57	214A0-51791	217
134A3-48911	63	139A3-42011	65	20712-40275	29	214A0-51801	217
134A3-48911	64	139B3-80201	71	20802-51301	191	214A0-51811	217
134A3-48911	65	139B3-82111	71	20802-51301	192	214A0-51821	217
134A3-48911	72	139B3-82121	71	209K2-40501	28	214A0-51831	217
134A3-52001	73	139B3-82131	71	209K2-43001	27	214A0-51841	217
134A3-52041	73	139B3-82141	71	209K2-43001	28	214A0-51851	217
134A3-52051	73	139B3-82151	71	209K4-10601	82	214A0-51861	217
134A3-52061	73	139B3-82161	71	209K4-10801	78	214A0-51871	217
134A3-59801	73	139B3-89801	71	209K4-10801	82	214A0-51881	217
134B3-80281	69	139B3-89811	71	209K4-12301	82	214A0-53681	217
134B3-82001	67	142F3-12001	63	209K4-12501	78	214A0-53681	217

PARTS NUMBER INDEX

Part No.	Fig.No.	Part No.	Fig.No.	Part No.	Fig.No.	Part No.	Fig.No.
214A0-53721	217	214A2-52002	74	214A6-42771	158	214A8-10582	219
214A0-53901	217	214A2-52012	62	214A6-42771	159	214A8-10592	205
214A0-53901	217	214A2-52012	74	214A6-42771	160	214A8-10592	211
214A0-53901	217	214A3-00301	76	214A6-42911	155	214A8-10592	219
214A0-53901	217	214A3-02001	77	214A7-42071	124	214A8-10602	205
214A0-59821	217	214A3-02011	76	214A7-42071	125	214A8-10602	211
214A0-62151	218	214A4-12161	78	214A7-42071	179	214A8-10602	219
214A0-82651	216	214A4-12161	82	214A7-42071	179	214A8-10612	205
214A0-82651	224	214A4-32041	84	214A7-42071	180	214A8-10612	211
214A0-82681	216	214A4-32041	85	214A7-42071	180	214A8-10612	219
214A0-82681	224	214A4-32041	86	214A7-42071	180	214A8-10622	205
214A0-82831	216	214A4-32051	84	214A7-42071	181	214A8-10622	211
214A0-82831	224	214A4-32051	85	214A7-42071	181	214A8-10622	219
214A0-93001	220	214A4-32051	86	214A7-42071	181	214A8-10632	205
214A0-93011	220	214A4-32131	84	214A7-42071	181	214A8-10632	211
214A0-93031	220	214A4-32131	86	214A7-42071	182	214A8-10632	219
214A0-93041	220	214A4-32161	84	214A7-42071	182	214A8-10642	205
214A0-93101	220	214A4-32161	85	214A7-42071	182	214A8-10642	211
214A0-93111	220	214A4-32161	86	214A7-42071	182	214A8-10642	219
214A0-93131	220	214A4-32201	87	214A7-42071	182	214A8-10653	205
214A0-93141	220	214A4-32211	87	214A7-42171	179	214A8-10653	211
214A1-02111	1	214A4-52021	109	214A7-42171	180	214A8-10653	219
214A1-02111	2	214A4-52021	111	214A7-42171	181	214A8-10663	205
214A1-02121	1	214A4-52031	109	214A7-42171	182	214A8-10663	211
214A1-02121	2	214A4-52031	111	214A7-42181	183	214A8-10663	219
214A2-12001	12	214A4-52041	109	214A7-42181	183	214A8-10673	205
214A2-12021	12	214A4-52041	111	214A7-42181	183	214A8-10673	211
214A2-12111	12	214A4-59802	109	214A7-42181	183	214A8-10673	219
214A2-12121	12	214A4-59802	111	214A7-42191	183	214A8-10683	205
214A2-12141	12	214A5-22001	124	214A7-42201	183	214A8-10683	211
214A2-12201	12	214A5-22001	125	214A7-62131	187	214A8-10683	219
214A2-13001	12	214A5-22051	124	214A7-62131	189	214A8-11001	205
214A2-13011	12	214A5-22051	125	214A8-02201	208	214A8-11001	211
214A2-40203	39	214A5-32101	130	214A8-02201	214	214A8-11001	219
214A2-42331	9	214A5-32312	130	214A8-02201	222	214A8-12001	205
214A2-42331	11	214A5-33012	130	214A8-10512	205	214A8-12001	211
214A2-42331	29	214A5-33031	130	214A8-10512	205	214A8-12001	219
214A2-42331	34	214A5-33041	130	214A8-10512	211	214A8-12011	205
214A2-42331	35	214A5-33052	130	214A8-10512	211	214A8-12011	211
214A2-42331	36	214A5-33062	130	214A8-10512	211	214A8-12011	219
214A2-42331	37	214A5-52121	140	214A8-10512	219	214A8-12021	205
214A2-42331	131	214A5-52131	140	214A8-10512	219	214A8-12021	211
214A2-42331	133	214A5-52241	140	214A8-10512	219	214A8-12021	219
214A2-42371	55	214A5-53012	197	214A8-10522	205	214A8-12031	205
214A2-42611	12	214A6-12601	87	214A8-10522	211	214A8-12031	211
214A2-42611	29	214A6-42121	151	214A8-10522	219	214A8-12031	219
214A2-42611	30	214A6-42121	152	214A8-10532	205	214A8-42661	209
214A2-42611	44	214A6-42252	149	214A8-10532	211	214A8-42661	217
214A2-42611	45	214A6-42252	156	214A8-10532	219	214A8-42661	225
214A2-42611	46	214A6-42252	157	214A8-10542	205	214A8-42721	225
214A2-42611	47	214A6-42252	157	214A8-10542	211	214A8-43081	226
214A2-42611	58	214A6-42252	157	214A8-10542	219	214A8-44151	210
214A2-42611	59	214A6-42252	157	214A8-10552	205	214A8-44151	218
214A2-42611	60	214A6-42252	157	214A8-10552	211	214A8-44151	226
214A2-42611	61	214A6-42252	157	214A8-10552	219	214A8-46001	225
214A2-42621	29	214A6-42252	158	214A8-10563	205	214A8-52051	110
214A2-42621	30	214A6-42361	159	214A8-10563	211	214A8-52221	110
214A2-44001	38	214A6-42361	160	214A8-10563	219	214A9-20101	203
214A2-44511	39	214A6-42771	27	214A8-10582	205	214A9-20101	203
214A2-52002	62	214A6-42771	28	214A8-10582	211	214L5-32101	131

PARTS NUMBER INDEX

Part No.	Fig.No.	Part No.	Fig.No.	Part No.	Fig.No.	Part No.	Fig.No.
214L5-32101	133	216G2-43241	26	216G2-43631	46	216G6-43241	130
214L7-62261	168	216G2-43251	26	216G2-43651	29	216G6-43241	131
214T2-42311	29	216G2-43261	26	216G2-43651	30	216G6-43241	132
214T2-42311	30	216G2-43271	26	216G2-43711	29	216G6-43241	133
214T2-42321	29	216G2-43281	26	216G2-43711	30	216G6-43561	149
214T2-42321	30	216G2-43291	26	216G4-12091	27	216G6-52231	155
214T6-42091	153	216G2-43301	26	216G4-12091	28	216G6-52271	155
215B4-52122	110	216G2-43401	29	216G4-12101	78	216G6-52291	150
215B8-52022	194	216G2-43401	30	216G4-12101	82	216G6-52291	155
215E4-12231	82	216G2-43411	29	216G4-12111	78	216G7-32001	170
215E4-32341	84	216G2-43411	30	216G4-12111	82	216G7-32001	171
215E4-32341	85	216G2-43421	29	216G4-12151	82	216G7-32001	172
215E4-32341	86	216G2-43421	30	216G4-12161	82	216G7-32001	173
215E4-39801	84	216G2-43502	39	216G4-12171	82	216G7-32011	130
215E4-39801	85	216G2-43502	44	216G4-12251	80	216G7-32011	131
215E4-39801	86	216G2-43502	45	216G4-12251	215	216G7-32011	132
215E4-52231	85	216G2-43502	46	216G4-12251	215	216G7-32011	133
215E4-52301	85	216G2-43531	39	216G4-12251	223	216G7-32011	170
215E7-62091	188	216G2-43531	44	216G4-12601	78	216G7-32011	171
215E8-42171	209	216G2-43531	45	216G4-12601	82	216G7-32011	172
215E8-42171	209	216G2-43531	46	216G4-12611	78	216G7-32011	173
215E8-42171	217	216G2-43542	39	216G4-12611	82	216G7-32021	170
215E8-42171	225	216G2-43542	44	216G4-12621	78	216G7-32021	171
215E8-42171	225	216G2-43542	45	216G4-12621	82	216G7-32021	172
215E8-42181	209	216G2-43542	46	216G4-12631	78	216G7-32021	173
215E8-42181	209	216G2-43551	39	216G4-12631	82	216G7-32041	170
215E8-42181	217	216G2-43551	44	216G4-12641	78	216G7-32041	171
215E8-42181	225	216G2-43551	45	216G4-12641	82	216G7-32041	172
215E8-42181	225	216G2-43551	46	216G4-12661	78	216G7-32041	173
216G1-02111	1	216G2-43562	39	216G4-12661	82	216G7-40012	179
216G1-02111	2	216G2-43562	44	216G4-12681	78	216G7-40012	180
216G1-02451	3	216G2-43562	45	216G4-12681	82	216G7-40012	181
216G1-02461	3	216G2-43562	46	216G4-12711	78	216G7-40012	182
216G1-02471	3	216G2-43571	39	216G4-12711	82	216G7-40022	179
216G1-02481	3	216G2-43571	44	216G4-12741	78	216G7-40022	180
216G1-02491	3	216G2-43571	45	216G4-12741	82	216G7-40022	181
216G1-02501	3	216G2-43571	46	216G4-12751	78	216G7-40022	182
216G2-22051	16	216G2-43582	39	216G4-12751	82	216G7-40032	180
216G2-22202	142	216G2-43582	44	216G4-12761	78	216G7-40032	181
216G2-22202	143	216G2-43582	45	216G4-12761	82	216G7-40032	182
216G2-22211	16	216G2-43582	46	216G5-22081	124	216G7-40042	181
216G2-40602	39	216G2-43592	39	216G5-22081	125	216G7-40042	182
216G2-40602	44	216G2-43592	44	216G5-22081	132	216G7-42001	179
216G2-40602	45	216G2-43592	45	216G5-22101	124	216G7-42011	180
216G2-40602	46	216G2-43592	46	216G5-22101	125	216G7-42011	181
216G2-40701	39	216G2-43602	39	216G5-32201	130	216G7-52051	142
216G2-40711	39	216G2-43602	44	216G5-32311	130	216G7-52051	143
216G2-40721	39	216G2-43602	45	216G5-32321	130	216G7-52121	193
216G2-40731	39	216G2-43602	46	216G5-32331	130	216G7-52201	144
216G2-42131	27	216G2-43611	39	216G5-32341	130	216G7-52201	193
216G2-42131	28	216G2-43611	44	216G5-42011	130	216G8-12101	205
216G2-42311	29	216G2-43611	45	216G6-32101	146	216G8-12101	211
216G2-42311	30	216G2-43611	46	216G6-42451	150	216G8-12101	219
216G2-42321	29	216G2-43622	39	216G6-42481	150	216G8-12921	211
216G2-42321	30	216G2-43622	44	216G6-42541	113	216G8-12921	219
216G2-43111	31	216G2-43622	45	216G6-42541	114	216G8-33351	222
216G2-43161	26	216G2-43622	46	216G6-42541	150	216G8-33361	208
216G2-43201	26	216G2-43631	39	216G6-42911	154	216G8-33361	214
216G2-43221	26	216G2-43631	44	216G6-42931	154	216G8-33361	222
216G2-43231	26	216G2-43631	45	216G6-43231	140	216G8-33361	222

PARTS NUMBER INDEX

Part No.	Fig.No.	Part No.	Fig.No.	Part No.	Fig.No.	Part No.	Fig.No.
216G8-33371	208	218G5-10121	117	222A5-52111	140	224W5-32501	131
216G8-33371	214	218G5-10121	117	222A6-42451	151	224W5-32501	133
216G8-33371	222	218G6-40521	150	222A6-42461	151	224W5-32511	131
216G8-33371	222	218G6-42302	154	222A9-32011	123	224W5-32511	133
216G8-33401	208	218G6-42451	150	222A9-32011	123	224W5-32521	131
216G8-33401	214	218G6-42471	150	22208-40031	209	224W5-32521	133
216G8-33401	222	218H5-42521	132	22208-40031	216	224W5-32551	131
216G8-52201	194	218M5-10401	113	22208-40031	224	224W5-32551	133
216G8-52301	194	218M5-12501	113	22214-30321	84	224W5-42401	131
216G8-52301	208	218M5-12501	114	22214-30321	85	224W5-42401	133
216G8-52301	214	22018-30064	214	22214-30321	86	224W5-42431	131
216G8-52301	222	22018-30065	208	22216-30051	147	224W5-42431	133
216G8-53001	195	22018-30065	214	22218-40191	209	224W7-60311	131
216G8-53011	195	22018-30065	222	22218-40191	216	224W7-60311	133
216G8-53051	195	22132-40041	40	22218-40191	224	224W7-62701	110
216G9-12013	196	22132-40041	41	22218-40191	225	22438-42641	216
216G9-12023	196	22132-40041	42	22218-42111	209	22438-42641	224
216G9-12033	196	22132-40041	43	22218-42111	216	225A7-62021	167
216G9-12052	197	22132-40202	40	22218-42111	224	225R6-32001	148
216G9-12062	197	22132-40202	41	22218-42111	225	225R9-12001	198
216G9-12071	197	22132-40202	42	22252-32241	18	225R9-12011	196
216G9-12071	198	22132-40202	43	22252-32241	19	225R9-12021	196
216G9-12071	199	22192-22091	17	22252-32241	20	225R9-12031	198
216G9-12071	200	22192-22091	17	22252-32251	12	225R9-12052	198
216G9-12071	201	22192-42411	40	22252-32251	18	225R9-12071	198
216G9-12071	202	22192-42411	41	22252-32251	19	225R9-12081	198
216G9-12131	197	22192-42411	42	22252-32251	20	225R9-12091	198
216G9-12131	198	22192-42411	43	22252-32251	130	225R9-12101	148
216G9-12131	199	22193-03001	76	22252-32251	131	225R9-12112	198
216G9-12131	200	22197-52091	75	22252-32251	132	225R9-12142	196
216G9-12131	201	22197-60231	80	22252-32251	133	225S9-12001	196
216G9-12131	202	22199-12401	63	22256-42001	15	225S9-12011	196
216G9-32001	156	22199-12401	84	22256-42001	40	22517-40051	179
216H3-92171	150	22199-12401	85	22256-42001	41	22517-40051	180
216H3-92281	179	22199-12401	86	22256-42001	42	22517-40051	181
216H3-92281	180	22199-12401	194	22256-42001	43	22517-40051	182
216H3-92281	181	22199-12401	194	224G5-42061	130	22517-40051	209
216H3-92281	182	22199-22251	203	224G5-42061	131	22548-34031	206
216H3-92291	134	22199-22251	203	224G5-42061	132	22548-34031	212
216H3-92291	135	222A2-10211	8	224G5-42061	133	22548-34031	220
216H3-92291	136	222A2-10211	9	224T8-53011	195	22548-34051	206
216H3-92291	137	222A2-10211	10	224W4-52071	5	22548-34051	212
216H5-42141	150	222A2-10211	11	224W5-30202	131	22548-34051	220
216H7-82111	192	222A2-42031	26	224W5-30202	133	22548-34061	206
217G2-32001	18	222A2-42031	27	224W5-32401	131	22548-34061	212
217G2-32001	19	222A2-42031	28	224W5-32401	133	22548-34061	220
217G2-40301	26	222A2-42331	26	224W5-32421	131	22580-53321	217
217G2-42021	31	222A2-42331	26	224W5-32421	133	22580-53321	217
217G2-42151	31	222A2-42341	26	224W5-32441	131	22655-42591	131
217M1-02031	6	222A2-42341	26	224W5-32441	133	22655-42591	132
217M1-02402	6	222A2-42361	26	224W5-32451	131	22655-42591	133
217W2-10001	193	222A2-42401	26	224W5-32451	133	22672-42501	44
218G1-02101	5	222A2-42401	26	224W5-32461	131	22672-42501	45
218G2-22001	16	222A2-42401	26	224W5-32461	133	22672-42501	46
218G2-22051	16	222A2-42511	40	224W5-32471	131	22673-72111	77
218G2-42001	29	222A2-42511	41	224W5-32471	133	22673-72121	77
218G2-42001	30	222A2-42511	42	224W5-32481	131	22673-72131	77
218G5-10111	117	222A2-42511	43	224W5-32481	133	22673-72141	77
218G5-10111	117	222A3-72011	77	224W5-32491	131	22673-72161	77
218G5-10121	117	222A3-72021	77	224W5-32491	133	22673-72252	77

PARTS NUMBER INDEX

Part No.	Fig.No.	Part No.	Fig.No.	Part No.	Fig.No.	Part No.	Fig.No.
22673-72261	77	22679-46511	209	229F2-42431	26	231A0-40342	214
22673-72321	77	22679-46511	225	229F6-42201	27	231A0-40352	214
22673-72391	77	22679-46531	216	229F6-42201	28	231A0-40362	214
22673-72411	77	22679-46591	225	229F6-42201	52	231A0-40372	214
22679-12102	204	22679-46651	216	229F6-42201	157	231A0-40382	214
22679-43831	217	22679-46671	209	229F6-42201	157	231A0-70602	222
22679-43831	225	22679-46811	209	229F6-42201	157	231A0-70612	222
22679-45611	216	22679-47301	44	229F6-42201	157	231A0-70622	222
22679-45651	224	22679-47301	45	229F6-42201	157	231A0-70632	222
22679-45671	216	22679-47301	46	229F6-42201	157	231A0-70642	222
22679-45711	209	22679-47301	47	229F6-42201	157	231A0-70652	222
22679-45711	216	22679-47301	59	229F6-42201	159	231A0-70662	222
22679-45711	224	22679-47301	60	229F6-42201	159	231A0-70672	222
22679-45771	209	22679-47301	118	229F6-42201	160	231A0-70682	222
22679-45771	216	22717-40061	179	229F6-42211	52	231A0-70692	222
22679-45791	216	22717-40061	180	229F6-42211	157	231A0-70702	222
22679-45791	224	22717-40061	181	229F6-42211	157	231A0-82001	216
22679-45811	216	22717-40061	182	229F6-42211	157	231A0-82001	224
22679-45831	209	22717-40081	209	229F6-42211	157	231A8-10101	205
22679-45831	225	22777-60301	178	229F6-42211	157	231A8-10101	205
22679-45871	224	228U7-62221	191	229F6-42211	157	231A8-10101	211
22679-45891	209	228U7-62221	192	229F6-42211	159	231A8-10101	211
22679-45891	216	22854-40201	97	229F6-42211	159	231A8-10101	219
22679-45891	216	229F0-51201	217	229G7-82011	193	231A8-10101	219
22679-45891	225	229F0-51211	217	229G7-82051	193	231A8-10171	205
22679-45911	209	229F0-51221	217	229G7-82051	193	231A8-10171	211
22679-45911	224	229F0-51231	217	229G7-82101	193	231A8-10171	219
22679-45951	216	229F0-51241	217	22959-12052	198	231A8-12001	211
22679-45971	209	229F0-51251	217	22959-12052	200	231A8-12001	219
22679-45971	225	229F0-51261	217	230C1-02041	117	231A8-12011	211
22679-45991	216	229F0-51271	217	230C1-02041	118	231A8-12011	219
22679-45991	216	229F0-51281	217	230C1-02041	119	231A8-12021	211
22679-45991	224	229F0-51291	217	230C1-02041	155	231A8-12021	219
22679-45991	224	229F0-51301	217	230C2-42201	36	231A8-12031	211
22679-46011	216	229F0-51311	217	230C2-42201	37	231A8-12031	219
22679-46031	209	229F0-51321	217	230C2-42301	31	231A8-51001	195
22679-46031	225	229F0-51331	217	230C5-55021	140	231A8-51011	195
22679-46051	209	229F0-51341	217	230C5-55031	140	231A8-51011	195
22679-46091	209	229F0-51351	217	230C5-55041	140	231A8-51011	195
22679-46091	224	229F0-51361	217	230C5-55051	140	231A8-51011	195
22679-46091	225	229F0-51371	217	230C5-55061	140	231F8-10501	205
22679-46111	216	229F0-51381	217	230C5-55071	140	231F8-10501	211
22679-46151	209	229F0-82101	216	230C5-55081	140	231F8-10501	219
22679-46151	209	229F0-82101	224	230C5-55101	140	231F8-10571	205
22679-46151	225	229F0-91001	168	230C5-55111	140	231F8-10571	211
22679-46171	209	229F0-91001	218	230C5-55121	140	231F8-10571	219
22679-46171	216	229F0-91001	226	231A0-40202	214	232A0-62001	218
22679-46171	225	229F2-22071	145	231A0-40212	214	232A0-70401	222
22679-46211	224	229F2-22151	142	231A0-40222	214	232A0-70411	222
22679-46231	216	229F2-22151	143	231A0-40232	214	232A0-70421	222
22679-46251	209	229F2-22161	142	231A0-40242	214	232A0-70431	222
22679-46271	225	229F2-22161	143	231A0-40252	214	232A0-70441	222
22679-46311	216	229F2-22171	145	231A0-40262	214	232A0-70451	222
22679-46331	209	229F2-42141	115	231A0-40272	214	232A0-70461	222
22679-46331	224	229F2-42141	115	231A0-40282	214	232A0-70471	222
22679-46371	216	229F2-42141	119	231A0-40292	214	232A0-70481	222
22679-46391	209	229F2-42141	153	231A0-40302	214	232A0-70491	222
22679-46391	225	229F2-42161	61	231A0-40312	214	232A0-70501	222
22679-46411	224	229F2-42421	26	231A0-40322	214	232A0-92141	226
22679-46451	209	229F2-42421	26	231A0-40332	214	232A8-42201	209

PARTS NUMBER INDEX

Part No.	Fig.No.	Part No.	Fig.No.	Part No.	Fig.No.	Part No.	Fig.No.
232A8-42201	209	234A0-50361	217	234A2-12201	10	234A8-10541	219
232A8-42201	217	234A0-50371	217	234A2-12201	11	234A8-10551	205
232A8-42201	225	234A0-50381	217	234A2-12211	8	234A8-10551	211
232A8-42201	225	234A0-50501	217	234A2-12211	9	234A8-10551	219
232A8-42601	225	234A0-50511	217	234A2-12211	10	234A8-10562	205
232A8-42621	225	234A0-50521	217	234A2-12211	11	234A8-10562	211
232A8-42631	225	234A0-50531	217	234A2-30501	18	234A8-10562	219
232W9-12001	198	234A0-50541	217	234A2-42301	38	234A8-10571	205
232W9-12011	198	234A0-50551	217	234A3-72001	77	234A8-10571	211
232W9-12021	198	234A0-50561	217	234A3-72021	77	234A8-10571	219
232W9-12051	196	234A0-50571	217	234A3-72031	77	234A8-10581	205
232W9-12101	198	234A0-50581	217	234A4-22101	83	234A8-10581	211
232W9-12111	198	234A0-50591	217	234A4-22101	83	234A8-10581	219
23200-62171	226	234A0-50601	217	234A4-30001	84	234A8-10591	205
23200-72211	222	234A0-50611	217	234A4-30001	86	234A8-10591	211
23200-72221	222	234A0-50621	217	234A4-30111	84	234A8-10591	219
23232-42072	34	234A0-50631	217	234A4-30111	86	234A8-10601	205
23232-42072	35	234A0-50641	217	234A4-32261	84	234A8-10601	211
23232-42072	36	234A0-50651	217	234A4-32261	86	234A8-10601	219
23232-42072	37	234A0-50661	217	234A4-32271	84	234A8-10611	205
23235-40091	138	234A0-50671	217	234A4-32271	86	234A8-10611	211
23302-42311	44	234A0-50681	217	234A6-32001	146	234A8-10611	219
23302-42311	45	234A0-50701	217	234A6-32001	148	234A8-10621	205
23302-42311	46	234A0-50711	217	234A6-42042	155	234A8-10621	211
23322-22011	17	234A0-50721	217	234A6-42072	155	234A8-10621	219
234A0-50001	217	234A0-50731	217	234A6-43121	151	234A8-10631	205
234A0-50011	217	234A0-50741	217	234A6-43121	152	234A8-10631	211
234A0-50021	217	234A0-50751	217	234A7-30202	170	234A8-10631	219
234A0-50031	217	234A0-50761	217	234A7-30302	171	234A8-10641	205
234A0-50041	217	234A0-50771	217	234A7-30402	172	234A8-10641	211
234A0-50051	217	234A0-50781	217	234A7-30502	173	234A8-10641	219
234A0-50061	217	234A0-50791	217	234A7-32001	170	234A8-10652	205
234A0-50071	217	234A0-50801	217	234A7-32001	171	234A8-10652	211
234A0-50081	217	234A0-50811	217	234A7-32001	172	234A8-10652	219
234A0-50091	217	234A0-50821	217	234A7-32001	173	234A8-10662	205
234A0-50101	217	234A0-50831	217	234A7-40052	182	234A8-10662	211
234A0-50111	217	234A0-50841	217	234A7-42011	182	234A8-10662	219
234A0-50121	217	234A0-50851	217	234A7-52101	144	234A8-10672	205
234A0-50131	217	234A0-50861	217	234A7-62101	184	234A8-10672	211
234A0-50141	217	234A0-50871	217	234A7-62101	185	234A8-10672	219
234A0-50151	217	234A0-50881	217	234A7-62101	186	234A8-10682	205
234A0-50161	217	234A0-52501	217	234A7-62201	184	234A8-10682	211
234A0-50171	217	234A0-52501	217	234A7-62201	185	234A8-10682	219
234A0-50181	217	234A0-52511	217	234A7-62201	186	234A8-22202	207
234A0-50201	217	234A0-52511	217	234A8-02001	214	234A8-22202	213
234A0-50211	217	234A0-52611	216	234A8-02201	210	234A8-22202	221
234A0-50221	217	234A0-52611	217	234A8-10501	205	234A8-40701	210
234A0-50231	217	234A0-52611	217	234A8-10501	211	234A8-40701	218
234A0-50241	217	234A0-52611	224	234A8-10501	219	234A8-40701	226
234A0-50251	217	234A0-62051	218	234A8-10511	205	234A8-41001	210
234A0-50261	217	234A0-62111	218	234A8-10511	211	234A8-41001	218
234A0-50271	217	234A0-62111	226	234A8-10511	219	234A8-41001	226
234A0-50281	217	234A1-00101	4	234A8-10521	205	234A8-41101	210
234A0-50291	217	234A1-00111	4	234A8-10521	211	234A8-41101	218
234A0-50301	217	234A1-00121	4	234A8-10521	219	234A8-41101	226
234A0-50311	217	234A1-02001	6	234A8-10531	205	234A8-42551	209
234A0-50321	217	234A1-02071	1	234A8-10531	211	234A8-42551	209
234A0-50331	217	234A1-02071	2	234A8-10531	219	234A8-42551	217
234A0-50341	217	234A2-12201	8	234A8-10541	205	234A8-42551	225
234A0-50351	217	234A2-12201	9	234A8-10541	211	234A8-42551	225

PARTS NUMBER INDEX

Part No.	Fig.No.	Part No.	Fig.No.	Part No.	Fig.No.	Part No.	Fig.No.
234A8-42561	209	23458-32052	220	23653-72062	77	23678-40095	210
234A8-42561	209	23467-82041	191	23653-72072	77	23678-40095	226
234A8-42561	217	23467-82041	192	23653-72081	77	23678-40105	226
234A8-42561	225	23467-82041	193	23653-72091	77	23678-40110	210
234A8-42561	225	235C2-40301	29	23653-72101	77	23678-40110	210
234A8-42571	209	235C2-40301	30	23653-72111	77	23678-40110	226
234A8-42571	209	23500-82001	209	23653-72131	77	23678-40120	210
234A8-42571	217	23500-82001	216	23653-72141	77	23678-40120	226
234A8-42571	225	23500-82001	224	23653-72151	77	23678-40125	210
234A8-42571	225	23500-82001	225	23653-72161	77	23678-40125	210
234A8-42602	210	236A5-10342	115	23653-72171	77	23678-40130	226
234A8-42602	218	236A5-10342	115	23653-72201	77	23678-40135	210
234A8-42602	226	236A5-10342	116	23654-32041	84	23678-40145	210
234A8-42611	210	236A5-10352	115	23654-32041	85	23678-40145	210
234A8-42611	218	236A5-10352	115	23654-32041	86	23678-40145	210
234A8-42611	226	236A5-10352	116	23654-32081	84	23678-40145	210
234A8-42622	210	236A9-19801	196	23654-32081	86	23678-40145	226
234A8-42622	218	236A9-19801	197	23654-32161	84	23678-40145	226
234A8-42622	226	236A9-19811	196	23654-32161	85	23678-40150	210
234A8-43501	209	236A9-19811	196	23654-32161	86	23678-40150	226
234A8-43501	216	236A9-19811	196	23654-34051	88	23678-40160	210
234A8-43501	224	236A9-19811	196	23654-40501	102	23678-40160	210
234A8-50103	194	236A9-19811	196	23654-40501	104	23678-40160	226
234A8-50113	194	236A9-19811	198	23654-40501	106	23678-40165	210
234A8-52162	194	236A9-19811	199	23654-40501	108	23678-40165	226
234A8-52172	194	236A9-19811	200	23654-40511	104	23678-40170	210
234B7-82101	191	236A9-19811	201	23654-52021	112	23678-40170	226
234B7-82111	191	236A9-19811	202	23655-22101	150	23678-40175	210
234B7-82111	192	236L2-10102	11	23655-22101	165	23678-40185	210
234H7-60104	193	23647-40041	179	23656-83001	165	23678-40185	226
234H7-60301	184	23647-40121	132	23656-83011	165	23678-40190	210
234H7-60301	185	23648-50161	217	23656-83051	165	23678-40190	210
234H7-60301	186	23650-52841	217	23656-83061	165	23678-40190	226
234H7-62171	193	23650-52841	217	23657-42131	180	23678-40195	226
234H7-62291	193	23650-52851	217	23657-60311	184	23678-40200	210
234H7-62301	169	23650-52851	217	23657-60311	185	23678-40200	210
234H7-62351	169	23650-52861	217	23657-60311	186	23678-40210	210
23452-42181	31	23650-52861	217	23658-42531	209	23678-40210	210
23453-02071	76	23650-83521	225	23658-42531	225	23678-40210	210
23453-02091	76	23650-83531	225	23658-52101	194	23678-40210	226
23453-02131	76	23650-83551	225	23658-52101	194	23678-40210	226
23454-40501	90	23650-83561	225	23658-52401	194	23678-40215	210
23454-40501	92	23650-83561	225	23658-52401	194	23678-40215	226
23454-40501	94	23650-83571	225	23659-12101	196	23678-40230	210
23454-40501	96	23651-02001	1	23659-42161	207	23678-40230	226
23454-40601	92	23651-02001	2	23659-42161	213	23678-40240	210
23455-42021	134	23651-02011	1	23659-42161	221	23678-40245	210
23455-42021	135	23651-02011	2	23670-73581	222	23678-40255	210
23455-42021	136	23652-12051	12	23670-82251	216	23678-40255	226
23455-42021	137	23652-12051	18	23670-82251	224	23678-40255	226
23456-42181	130	23652-12051	19	23670-82261	216	23678-40265	210
23456-42181	131	23652-12051	20	23670-82261	224	23678-40270	210
23456-42181	133	23652-22121	6	23678-06002	208	23678-40275	226
23456-42181	150	23652-44001	35	23678-06002	214	23678-40280	210
23457-42041	180	23652-44001	37	23678-06002	222	23678-40290	226
23457-42041	181	23652-44001	55	23678-40060	210	23678-40310	210
23457-60301	80	23653-02001	76	23678-40070	210	23678-40335	210
23457-60311	80	23653-72031	77	23678-40080	226	23678-42401	210
23458-32052	206	23653-72041	77	23678-40085	210	23678-42401	226
23458-32052	212	23653-72051	77	23678-40095	210	23678-53001	195

PARTS NUMBER INDEX

Part No.	Fig.No.	Part No.	Fig.No.	Part No.	Fig.No.	Part No.	Fig.No.
23678-53101	195	239A0-40021	214	239A4-12501	27	239A5-42351	136
23678-53101	195	239A0-40031	214	239A4-12501	28	239A5-42351	137
23679-45051	210	239A0-40041	214	239A4-12511	27	239A5-42381	29
23679-45051	226	239A0-40051	214	239A4-12511	28	239A5-42381	30
237A1-02101	3	239A0-40061	214	239A4-12521	27	239A5-42381	58
237A2-10102	9	239A0-40071	214	239A4-12521	28	239A5-42381	60
237H1-02001	3	239A0-40081	214	239A4-12541	27	239A5-42381	130
237H2-10102	11	239A0-40091	214	239A4-22001	79	239A5-42381	131
23772-12071	8	239A0-40101	214	239A4-22001	81	239A5-42381	132
23772-12071	9	239A0-40111	214	239A5-10111	117	239A5-42381	133
23772-12071	10	239A0-40121	214	239A5-10111	117	239A5-42401	130
23772-12071	11	239A0-40131	214	239A5-10121	117	239A5-42411	130
23775-42101	131	239A0-40141	214	239A5-10121	117	239A5-42451	134
23775-42101	132	239A0-40151	214	239A5-10342	115	239A5-42461	134
23775-42101	133	239A0-40161	214	239A5-10342	116	239A5-42471	134
238A2-42151	31	239A0-40171	214	239A5-10352	115	239A5-50101	140
238A9-92101	196	239A0-40181	214	239A5-10352	116	239A6-40201	149
238B2-10102	10	239A0-60101	212	239A5-12401	117	239A6-40301	151
238F5-40061	126	239A0-70201	222	239A5-12401	118	239A6-40502	150
238F5-40061	127	239A0-70211	222	239A5-12401	119	239A6-42001	149
238F5-40061	129	239A0-70221	222	239A5-12411	117	239A6-42251	150
238F5-40071	126	239A0-70231	222	239A5-12411	118	239A6-42251	150
238F5-40202	126	239A0-70241	222	239A5-12411	119	239A6-42251	150
238F5-40501	126	239A0-70251	222	239A5-12501	120	239A6-42251	150
238F5-40501	127	239A0-70261	222	239A5-12521	120	239A6-42291	151
238F5-40501	128	239A0-70271	222	239A5-20302	124	239A6-43001	149
238F5-40501	129	239A0-70281	222	239A5-20302	125	239A6-43011	149
238F5-42421	134	239A0-70291	222	239A5-20402	124	239A6-43101	149
238F5-42421	135	239A0-70301	222	239A5-20402	125	239A6-43111	149
238F5-42421	136	239A0-90101	220	239A5-22101	125	239A6-50112	155
238F5-42421	137	239A0-90161	226	239A5-22151	124	239A6-50302	155
238F5-42601	130	239A0-92101	226	239A5-22151	125	239A6-52131	155
238F5-42601	131	239A1-02511	4	239A5-22253	124	239A6-52141	155
238F5-42601	132	239A2-10102	8	239A5-22253	125	239A6-52171	155
238F5-42601	133	239A2-12021	12	239A5-40102	130	239A6-52231	155
238F9-12071	197	239A2-12141	8	239A5-40102	131	239A6-52601	155
238G2-22021	145	239A2-12141	10	239A5-40102	132	239A6-52601	155
238G2-22031	145	239A2-40501	27	239A5-40102	133	239A7-52001	142
238G2-22101	145	239A2-42101	31	239A5-40102	139	239A7-60301	187
238G4-50201	109	239A2-42201	32	239A5-40501	130	239A7-60301	189
238G4-50201	111	239A2-42221	39	239A5-40641	139	239A7-60311	187
238G4-50211	109	239A2-52001	62	239A5-42071	134	239A7-60311	189
238G4-50211	111	239A2-52001	74	239A5-42071	135	239A7-62112	190
238G4-52201	109	239A2-52061	62	239A5-42071	136	239A7-62121	190
238G4-52201	111	239A2-52061	74	239A5-42071	137	239A7-62131	190
238G5-40021	128	239A3-02001	76	239A5-42101	139	239A7-62211	190
238G5-40031	128	239A4-12102	78	239A5-42121	139	239A7-62251	190
238G5-40202	128	239A4-12112	78	239A5-42161	139	239A7-62261	190
238G6-12401	87	239A4-12121	78	239A5-42181	139	239A7-62351	190
238S5-40202	127	239A4-12121	82	239A5-42191	139	239A7-62401	190
238S5-40202	129	239A4-12131	78	239A5-42221	139	239A8-20002	206
23813-00071	88	239A4-12201	79	239A5-42251	139	239A8-20101	213
23813-00081	88	239A4-12201	81	239A5-42271	139	239A8-20101	221
23819-20011	203	239A4-12211	79	239A5-42281	139	239A8-20111	213
23819-20011	203	239A4-12211	80	239A5-42291	139	239A8-20121	213
23819-20021	203	239A4-12211	81	239A5-42301	138	239A8-20121	221
23819-20021	203	239A4-12402	78	239A5-42311	139	239A8-20131	213
23870-52821	68	239A4-12411	78	239A5-42321	139	239A8-20131	221
239A0-40001	214	239A4-12431	78	239A5-42351	134	239A8-20141	213
239A0-40011	214	239A4-12441	78	239A5-42351	135	239A8-20141	221

PARTS NUMBER INDEX

Part No.	Fig.No.	Part No.	Fig.No.	Part No.	Fig.No.	Part No.	Fig.No.
239A8-22111	221	239B5-42221	127	241G1-02201	1	242F6-82041	163
239A8-30002	208	239B5-42221	127	241G2-22031	17	242F6-82041	164
239A8-30012	208	239B5-42221	128	241G2-22151	17	242F6-82051	162
239A8-30022	208	239B5-42221	128	241G2-22201	17	242F6-82051	163
239A8-30032	208	239B5-42221	129	241G2-22211	17	242F6-82051	164
239A8-30042	208	239B5-42221	129	241G2-42001	34	242F6-82061	162
239A8-30052	208	239B5-42421	134	241G2-42101	29	242F6-82061	163
239A8-30062	208	239B5-42421	135	241G2-42121	34	242F6-82061	164
239A8-30072	208	239B5-42421	136	241G2-42121	36	242F6-82071	162
239A8-30082	208	239B5-42421	137	241G5-22001	125	242F6-82071	163
239A8-30092	208	239B5-42501	132	241G7-10201	168	242F6-82071	164
239A8-30102	208	239B5-42601	134	241G7-12001	168	242F6-82081	162
239A8-30112	208	239B5-42601	135	241H2-42001	36	242F6-82081	163
239A8-30122	208	239B5-42601	136	242E1-00101	1	242F6-82081	164
239A8-30132	208	239B5-42601	137	242E1-02001	5	242F6-82091	162
239A8-30142	208	239B5-42621	134	242E2-12001	8	242F6-82091	163
239A8-30152	208	239B5-42621	135	242E2-12001	10	242F6-82091	164
239A8-30162	208	239B5-42621	136	242E2-12011	8	242F6-82101	162
239A8-30172	208	239B5-42621	137	242E2-12011	10	242F6-82101	163
239A8-30182	208	239B6-50302	155	242E2-12201	13	242F6-82101	164
239A8-30202	208	239B6-52231	155	242E2-30201	18	242F6-82111	162
239A8-30212	208	239B6-52601	155	242E2-32001	18	242F6-82111	163
239A8-30222	208	239B6-52601	155	242E2-32101	18	242F6-82111	164
239A8-30232	208	239C9-12001	196	242E7-62001	185	242F6-82121	162
239A8-30242	208	239C9-12011	196	242F1-00101	2	242F6-82121	163
239A8-30252	208	239G5-40101	132	242F1-02001	2	242F6-82121	164
239A8-30262	208	239G5-40502	132	242F1-02051	2	242F6-82131	162
239A8-30272	208	239H1-02001	4	242F1-02101	6	242F6-82141	162
239A8-30282	208	239H1-02001	4	242F1-02111	6	242F6-82151	162
239A8-30292	208	239H5-40191	131	242F1-02121	6	242F6-82151	163
239A8-30302	208	239H5-40191	133	242F2-12001	9	242F6-82151	164
239A8-30312	208	239H5-40201	131	242F2-12001	11	242F6-82161	162
239A8-30322	208	239H5-40201	133	242F2-12051	9	242F6-82161	163
239A8-30332	208	239H5-40211	131	242F2-12051	11	242F6-82161	164
239A8-30342	208	239H5-40211	133	242F2-12201	14	242F6-82171	162
239A8-30352	208	239H5-40311	131	242F2-22001	17	242F6-82171	163
239A8-30362	208	239H5-40311	133	242F2-30101	19	242F6-82171	164
239A8-30372	208	239H5-40411	127	242F2-42001	30	242F6-82181	162
239A8-30382	208	239H5-40411	129	242F2-42151	31	242F6-82181	163
239A8-42001	210	239H5-42301	131	242F2-42251	35	242F6-82181	164
239A8-42001	218	239H5-42301	133	242F2-42301	30	242F6-82191	162
239A9-12001	196	239H5-42371	131	242F2-42311	30	242F6-82191	163
239A9-12011	196	239H5-42371	133	242F2-42321	30	242F6-82191	164
239A9-12301	197	239H5-42381	135	242F5-22001	124	242F6-82201	162
239A9-92001	123	239H5-42381	137	242F6-80101	162	242F6-82211	162
239A9-92001	123	239H5-42451	131	242F6-80201	163	242F6-82221	162
239B2-12141	8	239H5-42451	133	242F6-80201	164	242F6-82231	162
239B2-12141	10	239H5-42461	131	242F6-82001	162	242F6-82241	162
239B2-42201	33	239H5-42461	133	242F6-82001	163	242F6-82241	163
239B2-42301	31	239H7-52001	142	242F6-82001	164	242F6-82241	164
239B5-42201	126	239H7-52001	143	242F6-82011	162	242F6-82251	162
239B5-42201	127	239H7-60201	169	242F6-82011	163	242F6-82261	162
239B5-42201	128	239H7-60401	187	242F6-82011	164	242F6-82261	163
239B5-42201	129	239H7-60401	187	242F6-82021	162	242F6-82261	164
239B5-42211	126	239H7-60401	189	242F6-82021	163	242F6-82271	162
239B5-42211	127	239H7-82001	193	242F6-82021	164	242F6-82281	162
239B5-42211	128	239T9-12071	198	242F6-82031	162	242F6-82291	162
239B5-42211	129	23917-42191	217	242F6-82031	163	242F6-82291	163
239B5-42221	126	23917-42191	225	242F6-82031	164	242F6-82291	164
239B5-42221	126	241G1-02101	1	242F6-82041	162	242F6-82301	162

PARTS NUMBER INDEX

Part No.	Fig.No.	Part No.	Fig.No.	Part No.	Fig.No.	Part No.	Fig.No.
242F6-82311	162	24846-82041	165	25954-52091	111	27419-12072	198
242F6-82321	162	24846-82051	165	25957-62201	193	27419-12101	196
242F6-82331	162	24868-42111	209	25958-52201	110	27539-12011	196
242F7-62001	184	24868-42111	209	25958-52211	110	27539-12021	196
242G1-00101	2	24868-42111	217	25958-52221	110	27652-62211	38
242G2-42251	37	24868-42111	225	26062-42881	29	27662-62711	150
242S1-00101	2	24868-42111	225	26062-42881	30	27662-62721	117
242S1-02001	2	25592-42081	31	26062-42881	44	27662-62721	119
242S2-12201	15	25592-42121	145	26062-42881	45	27662-63041	150
242S2-52001	74	25594-52141	79	26062-42881	46	277H7-60501	190
242S7-62001	186	25594-52141	81	26062-42881	47	277H7-60601	178
24234-30551	83	25594-52362	109	26062-42881	58	277P0-50101	216
24234-30551	83	25594-52362	111	26062-42881	59	277P0-50111	216
24234-30551	84	25594-52431	112	26062-42881	60	277P0-50121	216
24234-30551	86	25595-42311	130	26602-42081	17	277P0-50131	216
24234-30551	109	25595-42311	139	27042-42312	124	277P0-50141	216
24234-30551	111	25595-42381	139	27042-42312	125	277P0-50151	216
24234-30561	84	25595-42391	139	27042-42312	187	277P0-50161	216
24234-30561	86	25595-42411	139	27042-42312	188	277P0-50171	216
24234-30561	109	25595-42421	139	27042-42312	189	277P0-50181	216
24234-30561	111	25595-42452	130	27042-43501	49	277P0-50191	216
24234-32411	84	25595-42452	130	27042-64311	57	277P0-50201	216
24234-32411	86	25595-42491	130	27049-12172	196	277P0-50211	216
24234-32421	84	25595-42491	131	271A7-52301	142	277P0-50221	216
24234-32421	86	25595-42491	132	271A7-52301	143	277P0-50231	216
24320-52001	217	25595-42491	133	271A7-60351	167	277P0-50241	216
24329-46201	210	25596-42361	40	271A9-12191	204	277P0-50251	216
24329-46201	226	25596-42361	40	271A9-12251	197	277P0-50261	216
24352-42521	29	25596-42361	42	271F4-12221	78	277P0-50271	216
24352-42521	30	25596-42361	43	271F4-12221	82	277P0-50281	216
24353-72001	76	25596-42361	150	271F4-12231	78	277P0-50301	216
24354-32311	88	25596-42361	150	271F4-12231	82	277P0-50311	216
24389-46021	216	25596-42361	150	271F4-12241	78	277P0-50321	216
24389-46021	224	25596-42361	150	271F4-12241	82	277P0-50331	216
24452-52002	76	25597-62211	79	272A8-52101	85	277P0-50341	216
24453-02061	76	25597-62211	81	272E7-52022	145	277P0-50351	216
24453-02102	76	25599-22001	203	272K8-52201	208	277P0-50361	216
24453-02121	76	25599-22001	203	272K8-52201	214	277P0-50371	216
24454-30512	84	256A1-08031	4	272K8-52201	222	277P0-50381	216
24454-30512	86	256A2-42171	31	273A9-12242	196	277P0-50391	216
24454-32161	84	256C1-08011	3	27397-52101	67	277P0-50411	216
24454-32161	86	256C5-12671	149	27410-53111	217	277P0-50421	216
24454-32232	84	256C7-42281	131	27410-53111	217	277P0-50431	216
24454-32232	85	256C7-42281	133	27410-53201	216	277P0-50441	216
24454-32232	86	256G1-08011	4	27410-53201	224	277P0-50451	216
24454-32391	84	256G1-08021	4	27415-52151	140	277P0-50461	216
24454-32391	86	25784-52342	110	27419-12051	196	277P0-50471	216
24454-39812	84	25785-43091	130	27419-12061	198	277P0-50481	216
24454-39812	86	25787-82081	192	27419-12061	199	277P0-50501	216
24459-42951	210	25789-12051	197	27419-12061	200	277P0-50511	216
24459-42951	218	25816-42761	153	27419-12061	201	277P0-50521	216
24459-42951	226	25952-42311	42	27419-12061	202	277P0-50531	216
24469-42701	110	25953-72001	77	27419-12062	197	277P0-50541	216
24662-22131	17	25954-52061	109	27419-12062	198	277P0-50551	216
24662-22141	17	25954-52061	111	27419-12071	198	277P0-50561	216
24846-80302	165	25954-52071	109	27419-12071	199	277P0-50571	216
24846-82001	165	25954-52071	111	27419-12071	200	277P0-50581	216
24846-82011	165	25954-52081	109	27419-12071	201	277P0-50591	216
24846-82021	165	25954-52081	111	27419-12071	202	277P0-50601	216
24846-82031	165	25954-52091	109	27419-12072	197	277P0-50601	224

PARTS NUMBER INDEX

Part No.	Fig.No.	Part No.	Fig.No.	Part No.	Fig.No.	Part No.	Fig.No.
277P0-50611	216	277P0-80591	224	277P0-82071	224	277P8-40121	209
277P0-50621	216	277P0-80601	224	277P0-82501	216	277P8-40131	209
277P0-50631	216	277P0-81101	225	277P0-82501	224	277P8-40141	209
277P0-50641	216	277P0-81111	225	277P0-83001	225	277P8-40151	209
277P0-50651	216	277P0-81121	225	277P0-89811	225	277P8-40161	209
277P0-50661	216	277P0-81131	225	277P0-92061	226	277P8-40171	209
277P0-50671	216	277P0-81141	225	277P8-22051	206	277P8-40181	209
277P0-50681	216	277P0-81151	225	277P8-22051	206	277T0-62071	218
277P0-59801	216	277P0-81161	225	277P8-22051	208	277T0-62071	226
277P0-59801	224	277P0-81171	225	277P8-22051	208	277T0-90151	226
277P0-60301	218	277P0-81181	225	277P8-22051	212	277T0-92131	226
277P0-60311	218	277P0-81191	225	277P8-22051	214	27717-52081	193
277P0-60321	218	277P0-81201	225	277P8-22051	214	27732-42221	121
277P0-60331	218	277P0-81302	225	277P8-22051	220	27732-42311	38
277P0-60341	218	277P0-81312	225	277P8-22051	222	27732-42311	43
277P0-60351	218	277P0-81322	225	277P8-22051	222	27732-42311	44
277P0-60361	218	277P0-81332	225	277P8-22051	222	27732-42311	44
277P0-60371	218	277P0-81342	225	277P8-22061	206	27732-42311	45
277P0-60381	218	277P0-81352	225	277P8-22061	206	27732-42311	46
277P0-60391	218	277P0-81362	225	277P8-22061	208	27732-42311	47
277P0-60401	218	277P0-81372	225	277P8-22061	212	27732-42311	48
277P0-60411	218	277P0-81382	225	277P8-22061	214	27732-42311	52
277P0-60421	218	277P0-81392	225	277P8-22061	220	27732-42311	54
277P0-60431	218	277P0-81402	225	277P8-22061	222	27732-42311	59
277P0-60441	218	277P0-81502	225	277P8-22061	222	27732-42311	60
277P0-60451	218	277P0-81512	225	277P8-22071	206	27912-62441	140
277P0-60461	218	277P0-81522	225	277P8-22071	208	27970-53141	225
277P0-60471	218	277P0-81532	225	277P8-22071	208	27979-43101	210
277P0-60481	218	277P0-81542	225	277P8-22071	212	27979-43101	218
277P0-80001	224	277P0-81552	225	277P8-22071	214	27979-43101	226
277P0-80011	224	277P0-81562	225	277P8-22071	214	280C2-42301	28
277P0-80021	224	277P0-81572	225	277P8-22071	214	280C2-42311	28
277P0-80031	224	277P0-81582	225	277P8-22071	220	280C2-42331	27
277P0-80041	224	277P0-81592	225	277P8-22071	222	280C2-42331	28
277P0-80051	224	277P0-81602	225	277P8-22071	222	280C2-42341	28
277P0-80061	224	277P0-81702	225	277P8-22071	222	280C2-42351	27
277P0-80071	224	277P0-81712	225	277P8-22081	206	280C2-42351	28
277P0-80081	224	277P0-81722	225	277P8-22081	208	281E7-42101	183
277P0-80091	224	277P0-81732	225	277P8-22081	208	29690-83011	225
277P0-80101	224	277P0-81742	225	277P8-22081	212	29690-83021	225
277P0-80301	224	277P0-81752	225	277P8-22081	214	29690-83021	225
277P0-80311	224	277P0-81762	225	277P8-22081	214	3956323	53
277P0-80321	224	277P0-81772	225	277P8-22081	214	509K2-30101	28
277P0-80331	224	277P0-81782	225	277P8-22081	220	509M5-92381	24
277P0-80341	224	277P0-81792	225	277P8-22081	222	509P5-90101	20
277P0-80351	224	277P0-81802	225	277P8-22081	222	509P5-92001	20
277P0-80371	224	277P0-81902	225	277P8-22081	222	509P5-92011	20
277P0-80381	224	277P0-81912	225	277P8-32701	141	509P5-92021	20
277P0-80391	224	277P0-81922	225	277P8-40001	209	509P5-92031	20
277P0-80401	224	277P0-81932	225	277P8-40011	209	509P5-92041	20
277P0-80501	224	277P0-81942	225	277P8-40021	209	509P5-92051	20
277P0-80511	224	277P0-81952	225	277P8-40031	209	509P5-92061	20
277P0-80521	224	277P0-81962	225	277P8-40041	209	509P5-92071	20
277P0-80531	224	277P0-81972	225	277P8-40051	209	509P5-92081	20
277P0-80541	224	277P0-81982	225	277P8-40061	209	509P5-92091	20
277P0-80551	224	277P0-81992	225	277P8-40071	209	509P5-92101	20
277P0-80561	216	277P0-82002	225	277P8-40081	209	509P5-92111	20
277P0-80561	224	277P0-82061	216	277P8-40091	209	509P5-92121	20
277P0-80571	224	277P0-82061	224	277P8-40101	209	509P5-92181	20
277P0-80581	224	277P0-82071	216	277P8-40111	209	509P5-92201	20

PARTS NUMBER INDEX

Part No.	Fig.No.	Part No.	Fig.No.	Part No.	Fig.No.	Part No.	Fig.No.
509P5-92211	20	514A3-72052	85	514A5-12011	154	516G3-82021	200
509P5-92231	20	514A3-72052	86	514A5-12021	123	516G3-82031	200
509P5-92241	20	514A3-72062	84	514A5-12701	82	516G3-82031	202
509P5-92351	25	514A3-72062	85	514A5-12701	149	516G3-82041	200
509P5-92451	24	514A3-72062	85	514A5-32341	52	516G3-82051	200
509P5-92471	24	514A3-72062	85	514A5-32341	52	516G3-82061	202
509P5-92481	24	514A3-72062	86	514A7-42002	76	516G3-82071	202
509P5-92491	20	514A3-72091	39	514E2-92001	196	516G3-82101	200
509P5-92511	20	514A3-72101	88	514T2-72061	118	516G3-82111	198
509P5-92521	20	514A3-72201	84	514T6-42001	165	516G3-82111	200
509P9-90101	43	514A3-72201	86	514T7-20201	49	516G3-82121	198
510F0-82032	21	514A3-72211	84	514T7-22061	49	516G3-82121	200
510F0-82032	22	514A3-72211	85	516G0-60101	3	516G3-82131	200
510F0-82032	23	514A3-72211	85	516G0-62001	4	516G3-82141	200
51152-82012	198	514A3-72211	86	516G0-62011	3	516G3-82141	202
51152-82012	200	514A3-82002	198	516G1-32002	38	516G3-82151	200
51152-82022	198	514A3-82002	199	516G1-32012	38	516G3-82161	200
51152-82022	200	514A3-82002	200	516G1-42021	20	516G3-82171	200
51153-02001	200	514A3-82002	201	516G1-42021	158	516G3-82181	202
51233-02021	200	514A3-82002	202	516G1-42021	159	516G3-82191	202
514A0-82022	22	514A3-82012	198	516G1-42021	160	516G3-82201	200
514A0-82081	22	514A3-82012	200	516G1-42101	44	516G3-82211	198
514A0-82251	22	514A3-82022	198	516G1-42101	46	516G3-82211	200
514A0-82251	23	514A3-82022	200	516G1-42101	52	516G3-82221	198
514A1-41001	47	514A3-82032	200	516G1-42111	44	516G3-82221	200
514A1-41001	59	514A3-82042	200	516G1-42111	45	516G3-82232	200
514A1-41001	60	514A3-82042	202	516G1-42111	45	516G3-82241	200
514A1-41011	47	514A3-82052	200	516G1-42111	46	516G3-82241	202
514A1-41021	47	514A3-82062	200	516G1-42121	46	516G3-82251	200
514A1-41031	47	514A3-82072	200	516G1-42151	44	516G3-82261	200
514A1-42041	47	514A3-82301	196	516G1-42151	45	516G3-82271	200
514A1-42041	49	514A3-82301	220	516G1-42151	46	516G3-82281	202
514A1-42041	52	514A3-82321	196	516G1-42211	42	516G3-82291	202
514A1-42191	47	514A3-82321	220	516G1-42211	47	516G3-82801	198
514A1-42191	59	514A3-82331	196	516G1-42211	52	516G3-82801	199
514A1-42191	60	514A3-82331	220	516G1-42251	157	516G3-82801	200
514A2-40104	85	514A3-82341	196	516G1-42251	157	516G3-82801	201
514A2-40462	110	514A3-82341	220	516G1-42251	157	516G3-82801	202
514A2-42481	85	514A3-82351	196	516G1-42251	157	516G3-82811	200
514A2-42512	188	514A3-82351	220	516G1-42251	157	516G3-82821	198
514A2-42721	85	514A3-82361	196	516G1-42251	157	516G3-82821	200
514A2-44022	85	514A3-82361	220	516G2-40451	80	516G3-82831	198
514A2-44022	85	514A3-82371	196	516G2-72051	146	516G3-82831	200
514A2-44022	85	514A3-82371	220	516G2-72071	22	516G3-82841	200
514A2-44071	85	514A3-82381	196	516G2-72071	23	516G3-82851	200
514A2-44071	85	514A3-82381	220	516G2-72701	198	516G3-82851	202
514A2-44071	85	514A3-82391	196	516G2-72701	199	516G3-82861	200
514A2-49803	110	514A3-82391	220	516G2-72701	200	516G3-82871	200
514A2-72411	183	514A3-82601	90	516G2-72701	201	516G3-82881	200
514A2-72411	183	514A3-82601	92	516G2-72701	202	516G3-82891	202
514A2-72411	183	514A3-82601	94	516G2-72711	198	516G3-82901	202
514A2-82012	198	514A3-82601	96	516G2-72711	199	516G5-12511	123
514A2-92011	196	514A5-12011	115	516G2-72711	200	516G5-12511	123
514A3-02002	200	514A5-12011	115	516G2-72711	201	516G5-13051	115
514A3-71701	206	514A5-12011	116	516G2-72711	202	516G5-13051	116
514A3-71702	212	514A5-12011	116	516G2-82051	198	516G5-13151	115
514A3-71702	220	514A5-12011	117	516G2-82061	198	516G5-13151	116
514A3-72052	84	514A5-12011	117	516G3-82001	200	516G5-13511	123
514A3-72052	85	514A5-12011	118	516G3-82011	198	516G5-13511	123
514A3-72052	85	514A5-12011	119	516G3-82011	200	516G5-13511	123

PARTS NUMBER INDEX

Part No.	Fig.No.	Part No.	Fig.No.	Part No.	Fig.No.	Part No.	Fig.No.
516G6-12051	53	522A2-18051	131	522A2-60563	77	522E2-82061	196
516G6-22011	61	522A2-18051	133	522A2-61561	77	522E2-82111	196
516G6-22031	26	522A2-18071	131	522A2-72111	198	524G2-10502	63
516G6-22031	26	522A2-18071	133	522A2-72111	199	524G3-62121	75
516G6-22051	26	522A2-18081	131	522A2-72111	200	524T3-84031	220
516G6-22051	26	522A2-18081	133	522A2-72111	201	524W3-92211	22
516G6-90401	158	522A2-18091	131	522A2-72111	202	524W5-12091	117
516G6-92001	56	522A2-18091	133	522A2-82061	196	524W5-12091	118
516G6-92011	56	522A2-18101	131	522A2-82111	196	524W5-12091	119
516G6-92022	56	522A2-18101	133	522A2-82151	198	524W5-13351	122
516G6-92031	56	522A2-18111	131	522A3-80401	94	52672-72122	198
516G6-92151	56	522A2-18111	133	522A3-80401	94	52672-72122	199
516G6-92201	56	522A2-18121	131	522A3-80451	106	52672-72122	200
516G6-92211	56	522A2-18121	133	522A3-80451	106	52672-72122	201
516G7-50201	159	522A2-18131	131	522A3-82441	196	52672-72122	202
516G7-50211	160	522A2-18131	133	522A3-82641	196	52672-72231	209
516G7-50301	54	522A2-18161	131	522A3-82841	196	52672-72231	216
516G7-50401	158	522A2-18161	133	522A3-83021	200	52672-72231	224
516G8-92001	47	522A2-18171	131	522A3-83041	196	52672-72231	225
516G9-10101	48	522A2-18171	133	522A3-83061	200	52672-82062	198
516G9-12011	48	522A2-18201	131	522A3-83061	202	52672-82073	198
516G9-92101	43	522A2-18201	133	522A3-83081	200	52676-80202	98
516M5-12311	123	522A2-18211	131	522A3-83221	200	52676-80302	98
516M5-12311	123	522A2-18211	133	522A3-83221	202	52676-80402	98
517G6-20101	26	522A2-18221	131	522A3-83241	196	52676-80601	94
517G6-20201	26	522A2-18221	133	522A3-83281	200	52676-80601	94
517H8-80101	26	522A2-18281	131	522A3-83281	202	52676-80802	99
518G0-90111	117	522A2-18281	133	522A3-83421	200	52691-92211	147
518G0-90111	117	522A2-18301	131	522A3-83441	196	52691-92221	147
518G0-90211	118	522A2-18301	133	522A3-83461	200	529F0-82101	22
518G2-80101	118	522A2-18311	131	522A3-83481	200	529F1-42201	47
518G2-80121	118	522A2-18311	133	522A3-83621	200	529F1-42251	47
518G2-80121	118	522A2-18321	131	522A3-83641	196	529F1-42251	59
518G2-80231	114	522A2-18321	133	522A3-83661	200	529F1-42251	60
518G8-12001	16	522A2-18331	131	522A3-83681	200	529F3-70401	179
518G8-12051	16	522A2-18331	133	522A3-83821	200	529F3-70411	180
518G8-12101	16	522A2-18341	131	522A3-83841	196	529F3-70411	181
520F7-22001	50	522A2-18341	133	522A3-83861	200	529F3-70421	182
520R8-30102	66	522A2-18352	131	522A3-83881	200	529F3-82041	202
521A2-42001	31	522A2-18352	133	522A6-80201	94	529F3-82051	202
521A2-42061	55	522A2-18361	131	522A6-80211	94	529F3-82061	202
522A1-10201	4	522A2-18361	133	522A6-80221	94	529F3-82071	202
522A1-42051	44	522A2-18371	131	522A6-80301	99	529F3-82081	196
522A1-42051	45	522A2-18371	133	522A6-80311	99	529F3-82091	196
522A1-42051	46	522A2-18391	131	522A6-80321	99	529F3-82101	196
522A1-42061	44	522A2-18391	133	522A6-80401	101	529F3-82101	220
522A1-42061	45	522A2-18541	131	522A6-80411	101	529F3-82111	196
522A1-42061	46	522A2-18541	133	522A6-80421	101	529F3-82111	220
522A2-10401	131	522A2-18551	131	522A6-80431	101	529F3-82161	202
522A2-10401	133	522A2-18551	133	522A6-80441	101	529F3-82171	202
522A2-11601	131	522A2-18561	131	522A6-80451	101	529F3-82242	202
522A2-11601	133	522A2-18561	133	522A6-80501	106	529F3-82252	202
522A2-18011	131	522A2-18571	131	522A6-80511	106	529F7-22001	50
522A2-18011	133	522A2-18571	133	522A6-80521	106	529F7-22001	51
522A2-18021	131	522A2-18581	131	522A7-22011	50	529F7-52241	58
522A2-18021	133	522A2-18581	133	522A7-22011	51	529F7-52241	60
522A2-18031	131	522A2-18591	131	522B0-92021	7	530C1-42001	44
522A2-18031	133	522A2-18591	133	522B0-92031	7	531A0-52521	41
522A2-18041	131	522A2-42001	31	522B0-92041	7	53130-12091	50
522A2-18041	133	522A2-60553	77	522B0-92051	7	532B3-82201	14

PARTS NUMBER INDEX

Part No.	Fig.No.	Part No.	Fig.No.	Part No.	Fig.No.	Part No.	Fig.No.
533A0-52051	43	534A3-82321	200	534A6-42301	166	535E3-82231	200
533A2-40201	110	534A3-82331	198	534A6-42311	166	535E3-82231	202
533A2-40211	110	534A3-82331	200	534A6-42321	166	535H3-82261	140
533A2-40402	85	534A3-82341	198	534A6-42331	166	535H3-82411	200
533A2-40502	85	534A3-82341	200	534A6-42341	166	535H3-82411	202
533A2-40552	85	534A3-82351	200	534A6-42351	166	535H3-82421	200
533A2-40552	85	534A3-82361	200	534A6-42361	166	535H3-82431	200
533A2-42001	110	534A3-82361	202	534A6-42371	166	535H3-82441	200
533A2-42021	110	534A3-82371	200	534A6-42381	166	535H3-82451	200
533A2-42032	85	534A3-82381	200	534A6-42391	166	535H3-82461	200
533A2-42042	85	534A3-82391	200	534A6-42401	166	535H3-82461	202
533A2-42071	85	534A3-82401	202	534A6-42411	166	535H3-82471	200
533A2-42101	85	534A3-82411	202	534A6-42421	166	535H3-82481	200
533A2-42202	85	534A3-82421	198	534A6-42431	166	535H3-82491	200
533A2-42202	85	534A3-82421	199	534A6-42441	166	535H3-82501	202
533A2-42212	85	534A3-82421	200	534A6-42451	166	535H3-82511	202
533A2-42212	85	534A3-82421	201	534A6-42472	166	536B6-60302	11
534A0-60011	4	534A3-82421	202	534A6-42482	166	536G2-82181	198
534A0-62001	4	534A3-82431	200	534A6-80171	96	536G2-82181	199
534A0-62011	4	534A3-82441	198	534A6-80271	108	536G2-82181	200
534A0-82101	21	534A3-82441	200	534A6-85001	108	536G2-82181	201
534A0-82101	22	534A3-82451	198	534A6-85011	96	536G2-82181	202
534A1-64402	213	534A3-82451	200	534A7-02001	31	536G2-82281	198
534A1-64402	221	534A3-82461	200	534A7-22101	49	536G3-82001	198
534A1-64412	213	534A3-82471	200	534A7-50101	54	536G3-82001	200
534A1-64412	221	534A3-82471	202	534A7-50301	57	536G3-82011	198
534A2-40402	170	534A3-82481	200	534A7-50401	57	536G3-82011	200
534A2-40502	171	534A3-82491	200	534A7-50501	57	536G3-82021	200
534A2-40502	171	534A3-82501	200	534A7-50601	58	536G3-82031	200
534A2-40602	172	534A3-82511	202	534A7-50601	59	536G3-82041	200
534A2-40602	172	534A3-82521	202	534A7-50601	60	536G3-82041	202
534A2-40702	173	534A3-82531	198	534A7-52011	76	536G3-82051	200
534A2-40702	173	534A4-22001	121	534A7-52301	57	536G3-82061	200
534A2-74001	213	534A4-22011	121	534A7-52401	57	536G3-82071	200
534A2-74001	221	534A4-22101	121	534A7-52501	57	536G3-82081	202
534A2-74051	213	534A4-60202	170	534A7-72001	29	536G3-82091	202
534A2-74051	221	534A4-60302	171	534A7-72001	30	53651-12551	3
534A2-74101	213	534A4-60402	172	534A9-22001	121	53651-12551	4
534A2-74101	221	534A4-60502	173	534A9-22011	121	53652-82011	198
534A2-74201	213	534A5-00401	123	534A9-22101	121	53652-82011	200
534A2-74201	221	534A5-00401	123	534A9-22211	39	53652-82352	198
534A2-74301	213	534A5-00411	123	534A9-22301	121	53652-82352	200
534A2-74301	221	534A5-12321	122	534A9-92131	41	53652-82401	198
534A3-04001	216	534A5-12331	122	534A9-92131	42	53652-82401	200
534A3-04001	224	534A5-12571	123	534A9-92131	43	53652-82541	198
534A3-70021	84	534A5-13011	2	534B3-80281	69	53652-82551	198
534A3-70021	86	534A5-32311	162	534F3-82001	102	53656-80201	100
534A3-70031	84	534A5-32651	153	534F3-82001	104	53656-80211	100
534A3-70031	86	534A5-33001	52	534F3-82001	106	53656-80401	101
534A3-70101	84	534A6-42001	166	534F3-82001	108	53656-80411	101
534A3-70101	86	534A6-42201	166	53456-80502	92	53656-80501	100
534A3-72111	84	534A6-42211	166	53456-80702	92	53656-80511	100
534A3-72111	86	534A6-42221	166	53456-80902	90	53656-80601	100
534A3-72121	84	534A6-42231	166	53456-80902	92	53656-80611	100
534A3-72121	86	534A6-42241	166	53456-82052	99	53656-80701	100
534A3-82311	198	534A6-42251	166	53456-82062	99	53656-80711	100
534A3-82311	199	534A6-42261	166	53457-40003	98	53656-80901	100
534A3-82311	200	534A6-42271	166	53457-42151	98	53656-80901	101
534A3-82311	201	534A6-42281	166	535C2-60401	150	53656-80911	100
534A3-82311	202	534A6-42291	166	535C8-92051	47	53656-80911	101

PARTS NUMBER INDEX

Part No.	Fig.No.	Part No.	Fig.No.	Part No.	Fig.No.	Part No.	Fig.No.
53656-81301	106	53666-81801	93	539A2-60601	149	539A5-00152	115
53656-81301	106	53666-81801	95	539A2-62301	82	539A5-00162	115
53656-81401	104	53666-81901	103	539A2-62321	82	539A5-00162	115
53656-81501	102	53666-81901	105	539A2-72121	31	539A5-00172	115
53656-81501	104	53666-81901	105	539A2-80111	118	539A5-00182	115
53656-81601	104	53666-81901	107	539A2-80151	118	539A5-00261	123
53656-82001	99	53666-82021	103	539A2-80161	118	539A5-00351	117
53656-82041	91	53666-82021	105	539A2-80172	115	539A5-00361	117
53656-82041	93	53666-82021	107	539A2-80172	115	539A5-00371	117
53656-82041	95	53666-82031	103	539A2-80182	115	539A5-00381	117
53656-82041	97	53666-82031	105	539A2-80182	115	539A5-00401	113
53656-82041	100	53666-82031	107	539A2-80192	115	539A5-00501	113
53656-82041	100	53666-82041	103	539A2-80192	115	539A5-00601	113
53656-82041	101	53666-82041	105	539A2-80202	115	539A5-00701	113
53656-82041	101	53666-82041	107	539A2-80202	115	539A5-10501	123
53656-82051	91	53675-54101	210	539A2-80221	118	539A5-12001	123
53656-82051	93	53675-54101	226	539A2-80301	114	539A5-12001	123
53656-82051	95	53675-55051	184	539A2-80371	118	539A5-12011	120
53656-82051	97	53675-55051	185	539A2-80501	114	539A5-12041	120
53656-82051	100	53675-55051	186	539A2-80571	118	539A5-12101	122
53656-82051	100	53675-55051	210	539A2-82251	118	539A5-30251	161
53656-82051	101	53675-55051	226	539A2-90201	113	539A5-30261	161
53656-82051	101	537A0-80302	21	539A2-90301	114	539A5-30301	149
53656-82061	91	537A0-80302	22	539A2-90401	114	539A5-30602	150
53656-82061	93	537A0-80302	23	539A3-72151	32	539A5-32091	161
53656-82061	95	537A0-82001	21	539A3-91201	214	539A5-32201	153
53656-82061	97	537A0-82001	22	539A3-91211	214	539A5-32301	161
53656-82061	100	537A0-82001	23	539A3-91221	214	539A5-32311	153
53656-82061	100	537A0-82011	21	539A3-91231	214	539A5-32361	41
53656-82061	101	537A0-82011	22	539A3-91241	214	539A5-32541	153
53656-82061	101	537A0-82011	23	539A3-91251	214	539A5-42351	151
53657-42053	98	537A6-60302	9	539A3-91261	214	539A5-92131	20
53657-42081	76	537A6-60302	11	539A3-91271	214	539A5-92141	20
53657-42091	76	537B3-80002	66	539A3-91281	214	539A5-92251	20
53658-42011	216	537B4-50002	66	539A3-91291	214	539A5-92261	20
53658-42011	224	538B6-60302	10	539A3-91301	214	539A5-92341	25
53658-43001	217	538G2-60202	128	539A3-91311	214	539A5-92371	20
53658-43001	225	538S3-72001	142	539A3-91321	214	539A5-92441	24
53658-43011	217	538S3-72001	143	539A3-91331	214	539A6-22001	61
53658-43011	225	539A0-82201	18	539A3-91341	214	539A6-22011	61
53658-43021	217	539A0-82201	19	539A3-91351	214	539A6-22021	31
53658-43021	225	539A0-90111	117	539A3-91361	214	539A6-42101	150
53658-43031	217	539A1-32001	122	539A3-91371	214	539A6-42111	150
53658-43031	225	539A1-42201	44	539A3-91381	214	539A6-52051	13
53658-43041	217	539A1-42201	45	539A3-91401	222	539A6-52051	14
53658-43041	225	539A1-42201	46	539A3-91411	222	539A6-52151	13
53666-80201	93	539A1-64101	212	539A3-91421	222	539A6-52151	14
53666-80401	95	539A1-64111	212	539A3-91431	222	539A6-60302	8
53666-80501	93	539A1-64201	220	539A3-91441	222	539A7-22061	49
53666-80601	91	539A1-64211	220	539A3-91451	222	539A7-22211	49
53666-80601	93	539A2-32001	62	539A3-91461	222	539A7-22301	50
53666-80701	93	539A2-32001	74	539A3-91471	222	539A7-22513	49
53666-80901	105	539A2-32041	62	539A3-91481	222	539A7-22611	49
53666-81301	107	539A2-32041	74	539A3-91491	222	539A7-52001	58
53666-81401	105	539A2-42001	80	539A3-91501	222	539A7-52001	59
53666-81501	103	539A2-42011	80	539A5-00111	117	539A7-52001	60
53666-81501	105	539A2-60111	118	539A5-00121	117	539A7-52041	57
53666-81601	105	539A2-60221	118	539A5-00131	117	539A7-52101	59
53666-81801	91	539A2-60231	114	539A5-00141	117	539A7-52101	60
53666-81801	93	539A2-60301	82	539A5-00152	115	539A7-52311	57

PARTS NUMBER INDEX

Part No.	Fig.No.	Part No.	Fig.No.	Part No.	Fig.No.	Part No.	Fig.No.
539A7-52411	57	542E0-80101	18	57042-72091	38	89140-00006	133
539A7-52511	57	542E0-80201	18	57045-52141	88	93956-59279	29
539A7-62201	153	542E0-80301	18	57045-52151	88	93956-59279	30
539A7-72001	27	542E1-70101	18	571A3-82361	198		
539A7-72001	28	542E1-70201	18	571A3-82361	199		
539A8-22101	52	542E1-70301	18	571A3-82361	200		
539A8-22151	52	542E6-52001	13	571A3-82361	201		
539A8-92111	44	542F0-80101	19	571A3-82361	202		
539A8-92111	45	542F0-80201	19	571A6-82081	106		
539A8-92111	46	542F0-80301	19	577H3-72181	161		
539A8-92111	47	542F1-70101	19	577P3-74001	206		
539A8-92251	47	542F1-70201	19	577P3-74001	206		
539A8-92251	59	542F1-70301	19	577P3-74001	208		
539A8-92251	59	542F3-72001	35	577P3-74001	208		
539A8-92251	60	542F3-80101	162	577P3-74001	212		
539A8-92251	60	542F3-80201	163	577P3-74001	214		
539A9-02001	48	542F3-80201	164	577P3-74001	214		
539A9-02011	48	542F3-82001	162	577P3-74001	220		
539A9-32001	123	542F3-82001	163	577P3-74001	222		
539A9-62001	204	542F3-82001	164	577P3-74001	222		
539A9-90201	149	542F3-82011	162	577P3-74001	222		
539A9-92001	29	542F3-82011	163	577P3-74011	206		
539A9-92101	40	542F3-82011	164	577P3-74011	206		
539A9-92201	150	542F3-82021	162	577P3-74011	208		
539A9-92301	30	542F3-82021	163	577P3-74011	212		
539A9-92351	30	542F3-82021	164	577P3-74011	214		
539B2-32201	33	542F5-92001	25	577P3-74011	220		
539B3-72151	33	542F6-52001	14	577P3-74011	222		
539B3-72201	33	542G3-72001	37	577P3-74011	222		
539B3-82301	33	542S6-50101	15	577P3-74021	225		
539B6-92111	56	542S6-52011	15	577P3-74031	225		
539B6-92211	56	542S6-52051	15	58106-31011	31		
539B7-42001	89	542S6-52151	15	59595-55301	110		
539B7-42011	89	542S6-52201	15	62150-14321	226		
539B7-42021	89	54612-42021	3	62156-52501	97		
539B7-42031	89	55592-82001	198	62459-23371	215		
539B7-42061	89	55592-82001	199	62459-23371	215		
539B7-42071	89	55592-82001	200	62459-23371	223		
539B7-52031	58	55592-82001	201	63110-18921	220		
539B7-52031	59	55592-82001	202	63130-25614	170		
539B7-52031	60	55593-02371	182	63130-25614	171		
539C0-90051	118	55593-62061	75	63130-25614	172		
539C0-90061	118	55593-62551	218	63130-25614	173		
539C1-90101	119	55597-22111	50	639A0-10011	215		
539C1-90151	42	556C7-22001	49	639A0-10011	215		
539C1-90211	119	55792-52601	57	639A0-10011	223		
539C1-90402	150	55792-52611	57	639A0-10051	215		
539C1-90502	22	55792-52621	57	639A0-10051	215		
539C1-90521	22	55792-52641	57	639A0-10051	223		
539C1-92301	152	558A9-92001	40	78470-98028	73		
539C1-92311	152	558A9-92001	41	78658-42012	73		
539C1-92401	152	558A9-92001	43	79562-61202	73		
539C1-92501	22	558A9-92001	58	79562-61203	73		
539C1-92541	152	558A9-92001	60	80110-00628	80		
539C1-92551	152	55812-42011	52	80430-00006	80		
539G3-72001	142	55952-18021	131	89140-00006	80		
539H6-52202	154	55952-18021	133	89140-00006	80		
539H6-52351	15	55953-02032	200	89140-00006	80		
541G3-72001	34	56110-63521	50	89140-00006	80		
541H3-72001	36	56110-63521	51	89140-00006	131		

No.PF-42AA
2003年 12月 発行

TCM株式会社
本 社 大阪市西区京町堀1－15－10
発 行 TCMテクノ株式会社

ISSUED:DECEMBER,2003

TCM CORPORATION
INTERNATIONAL MARKETING DIVISION : 1-15-5, Nishi－shimbashi, Minato－ku, Tokyo
105－0003, Japan
FAX : Japan +81－3－35918152, 3－35918153

無断で転載・複製を禁ず
All rights reserved.

SA－0312001(H) Printed in Japan

TCM株式会社